Toshiba RF window to WR1500

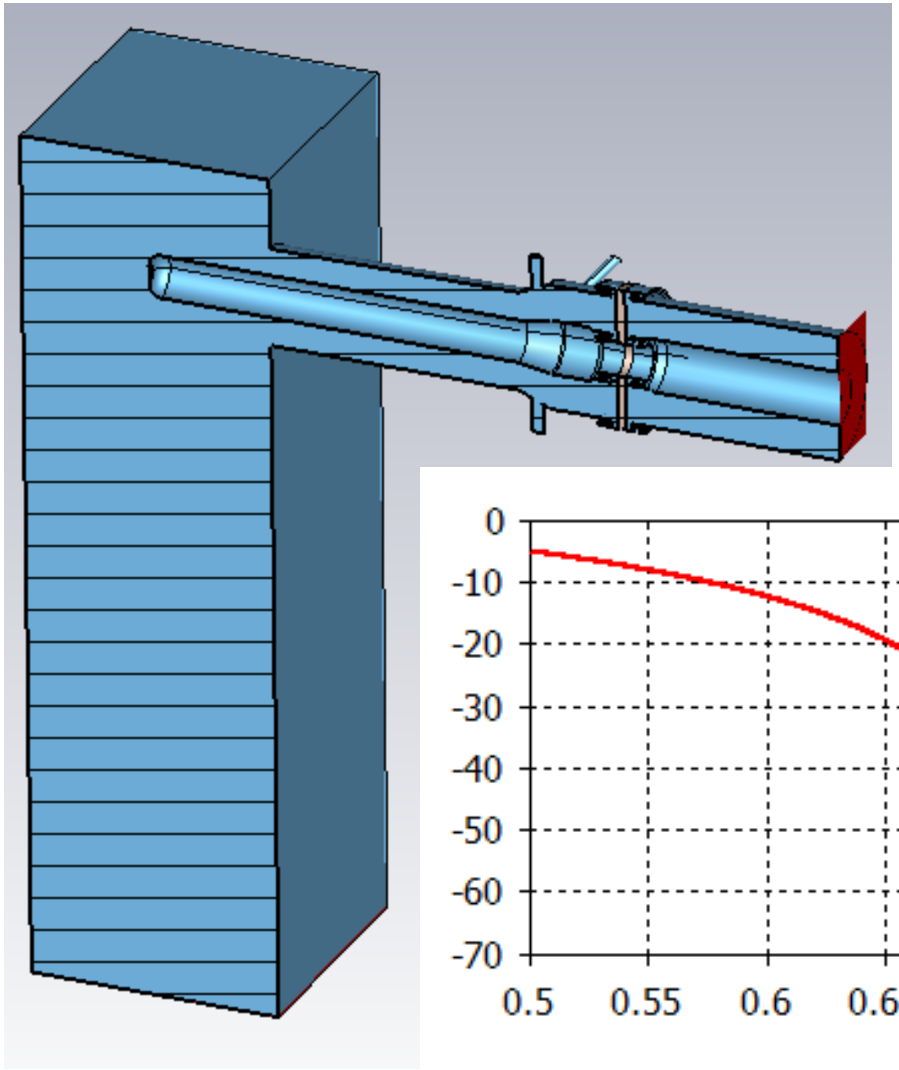
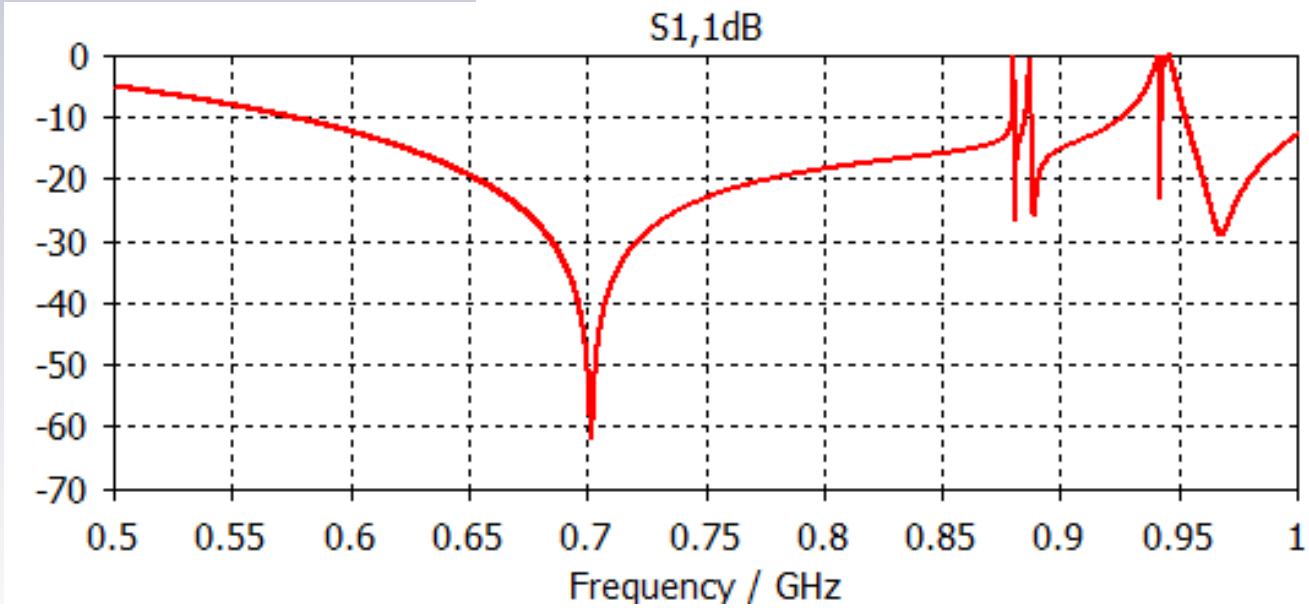
S11 of this transition:
-30dB region: 685 MHz – 721 MHz
-50dB @ 703.567 MHz