# Meeting Minutes – 12/4/14

1. Short beam diagnostic and tuning line to be added in Yellow line after 180° (opposite side of cooling section) per A. Fedotov. A 45° dipole will be needed here.
2. Cooling Section:
   - LF Solenoids:
     - Number of turns on these solenoids is being decided – D. Bruno
     - Number of solenoids changed to 7 in series for Blue and 7 for Yellow (instead of 6B and 6Y) with 1 power supply for blue and 1 power supply for yellow. At the 180° dipole end there should be about 2.5 m between HF and LF solenoids – Alexei.
     - Per J. Tuozzolo the LF solenoids need definition and specification for the winding method and how to do the leads.
     - K. Hamdi did a preliminary estimate of coil temperature to be 60C.
     - LF Corrector Windings: These horizontal and vertical windings to be made to as large an angle as possible to 90° to minimize sextupole field – W. Meng
     - Consider larger OD if needed to bring down current density.
   - HF Solenoids:
     - Number of turns and power supply has been selected – D. Bruno.
     - Determine cooling configuration: water-cooled housing or conductor. (Thermal analysis required).

- 180° Dipole:
  - Magnet to have 10 cm gap. Beam aperture to be 8-9cm (inside vac. chbr.) – AF
  - Karim calculated temperature rise of 40C.
  - From last week: Length of beam line between the 180° dipole and adjacent solenoid may need to be longer than 1 meter for instrumentation (to be determined).
- Compensating dipoles: Determine whether possible NSLS magnet will work before requesting magnets - JT.
- Cooling Section RF Design: Plan is to use shielded valves and bellows. Is the use of 'flying wire' profile monitor going to be a problem with RF currents/fields?– JT to check with Vladimir L. M. Blaskiewicz said that retracted element may be damaged by RF.

3. Dipole to beam dump extraction line needs to be 10 cm magnet gap – AF. Can ERL 30° dipole be reused here? Would a dipole like 20° inlet dipole to cooling section be better? A layout of this area is needed. C. Montag said this magnet needs good field quality for ion beam.

# Flying Wire PM

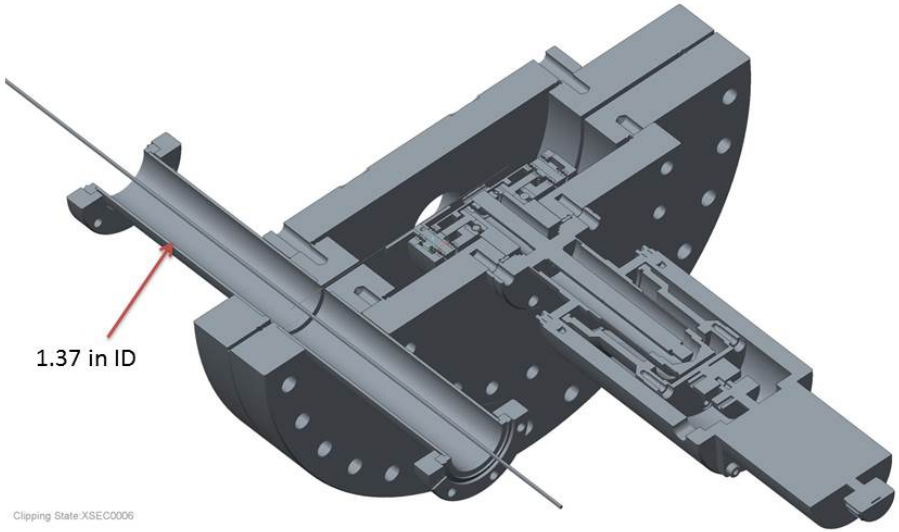


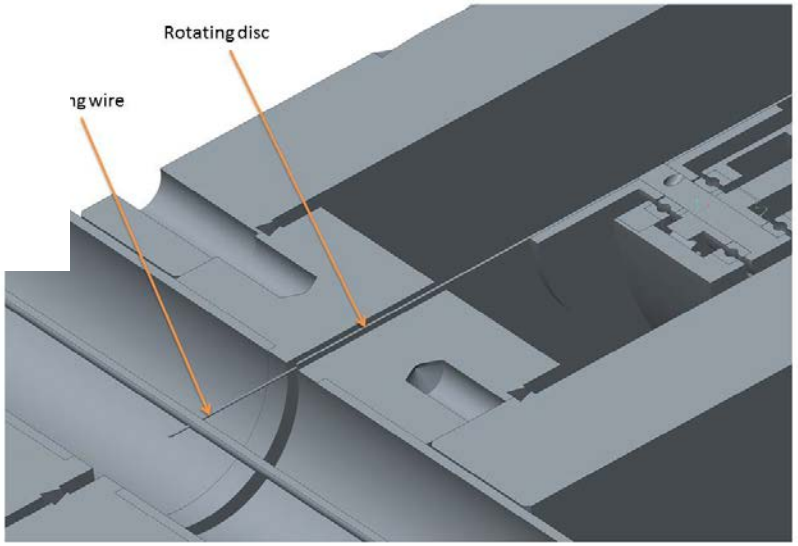

# LEReC-I (2MeV): Gun to dump



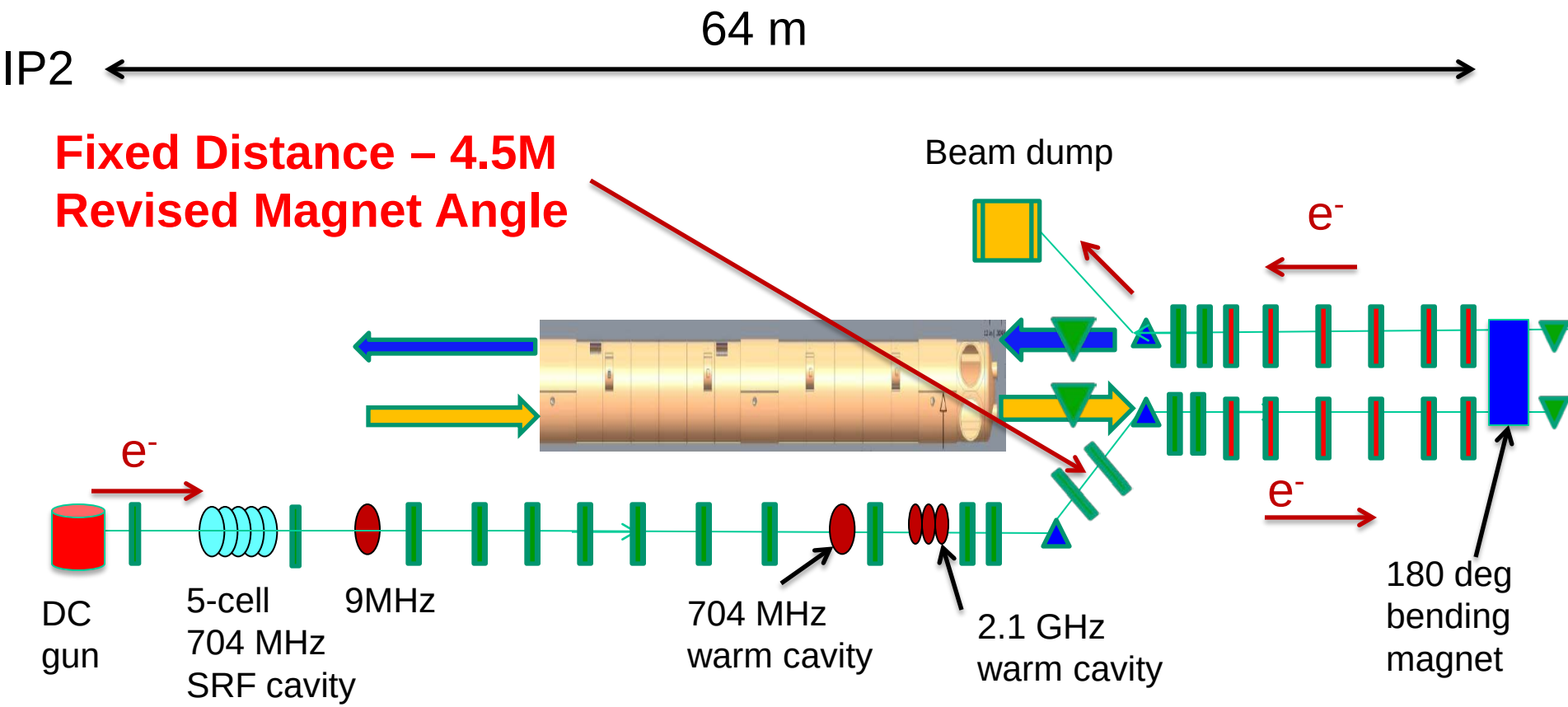

# Revised Cooling Sections

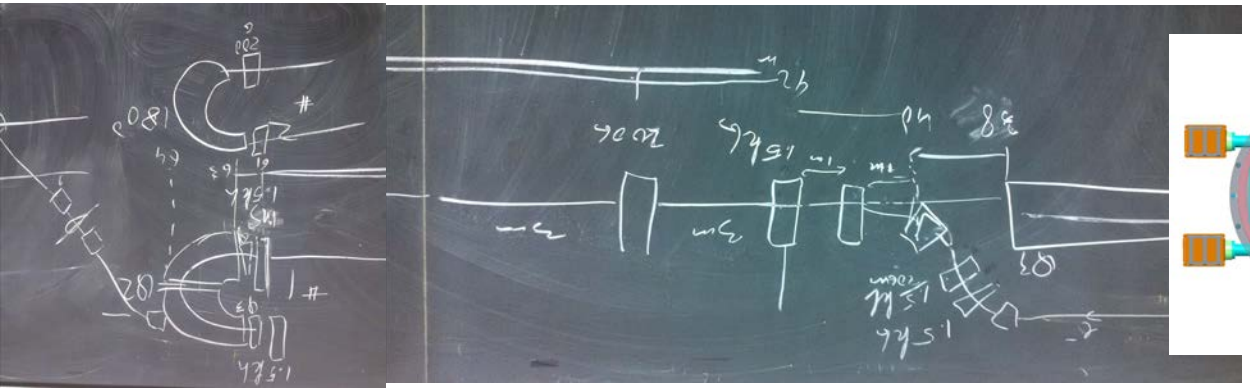

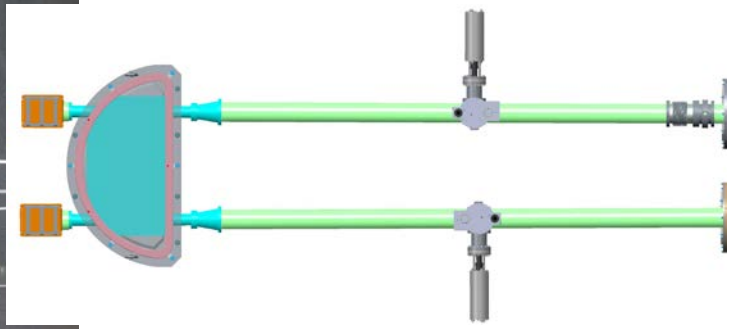

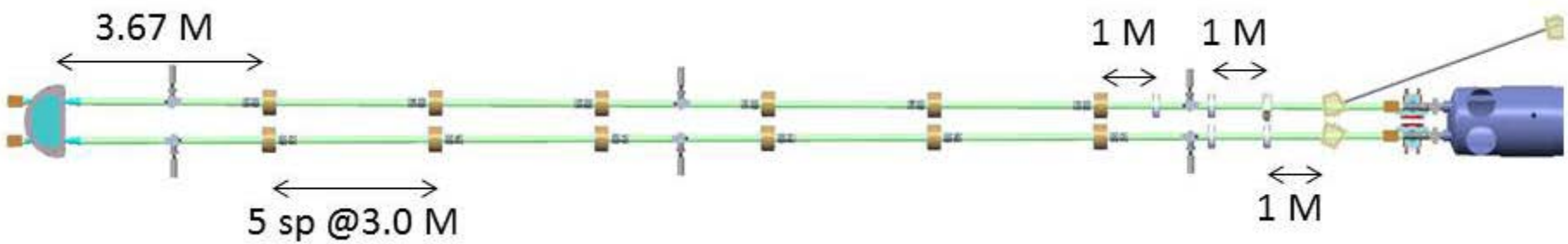


?? ← Cooling Sections →

Solenoids and diagnostics before and after 180°??

Bending angle for diagnostics line in yellow after 180°??

# Compensating Solenoids

1. Compensating Solenoid: Presently based on W. Meng's design for 0.20kG with bucking coils.
2. Compensating Solenoid : The separate leads for the bucking solenoid coils and the main solenoid coil on the magnet assembly terminal block.
3. Compensating Solenoid Power Supplies: It has not been determined whether each solenoid will require 1, 2, or 3 power supplies.
4. Spacing: Compensating solenoids will be spaced 3 meters apart.
5. From the Excel file, the Bz < 1 Gauss starts at Z = 19.7 cm., where cooling will be effective. The B**2 integral meets the required value (4E5 Gauss^2 - cm).

The Bz integral is much more than 2000 Gauss-cm.

- **Negotiate N vs I with PS group. (Square conductor)**
- **Center Solenoid Conductor Feeds**
- **Thermal calculation**
- **Complete SCD's checked, SOW in review**
- **Layout BPM, Bellows, Chamber Flange.**

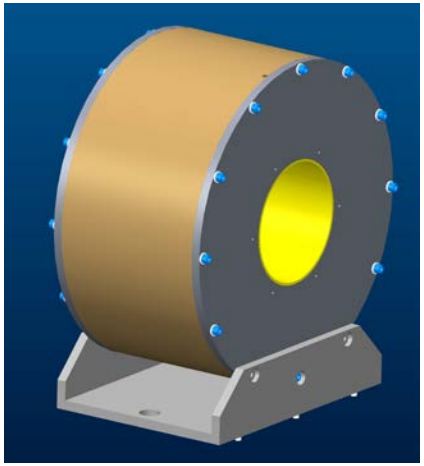

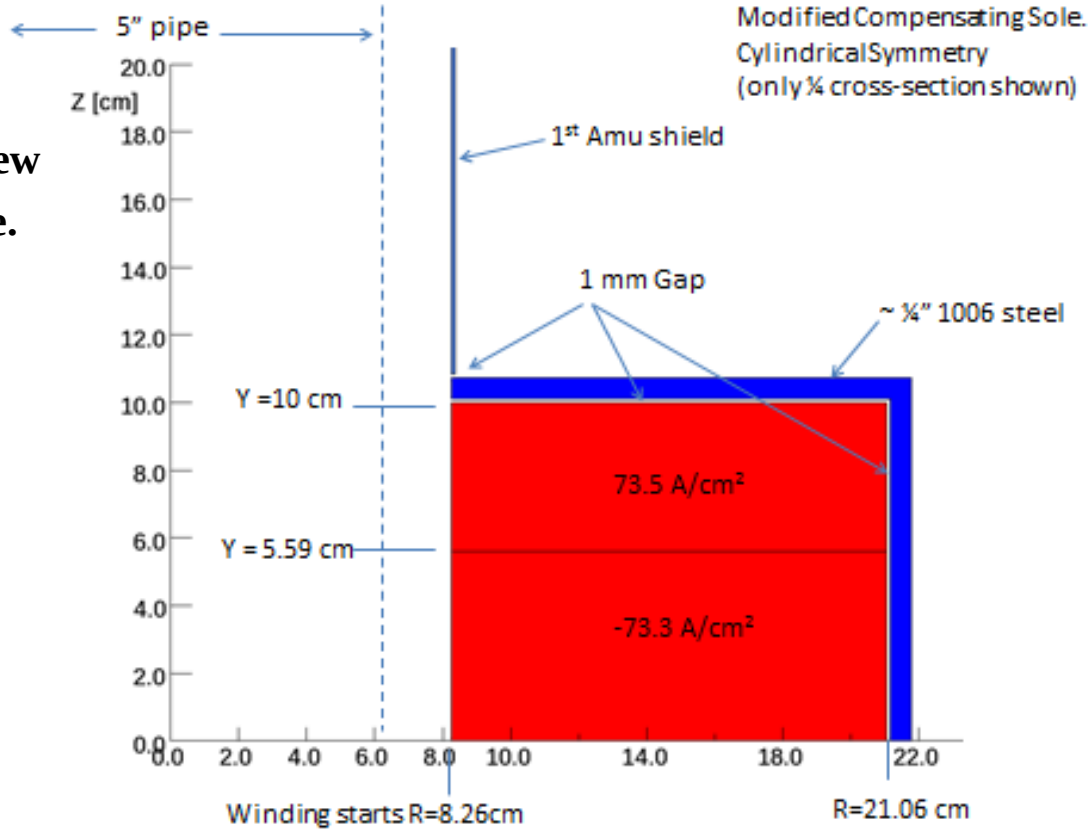

# Matching Solenoids

Matching Solenoid w/corrector

- 4 required in cooling section w/o bucking coil
- Corrector 100 Gcm, present specification.
- **Need to define N vs. I. Thermal calculation**
- **Complete SCD's checked, SOW in review**
- **Layout BPM, Bellows, Chamber Flange.**

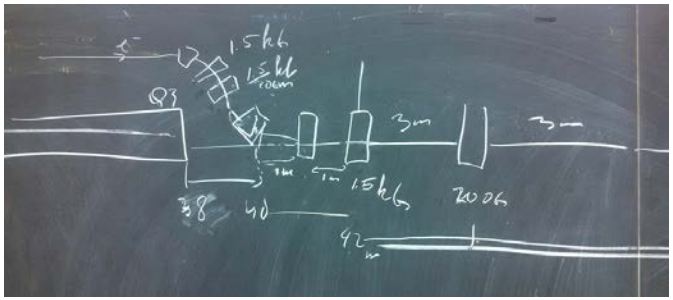


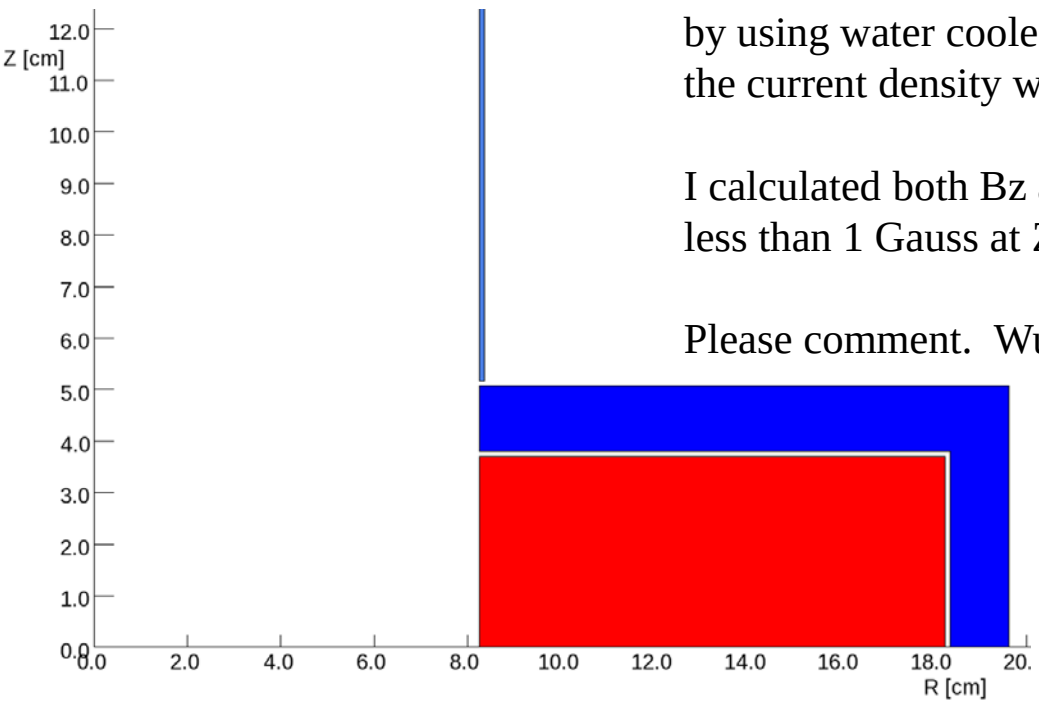


Attached files show the present status of 1.5 kG solenoid design by using water cooled conductor. If copper area is 50%, then the current density will be below 500 A/cm2 in the copper.

I calculated both Bz and Bz**2 along the Z-axis. Bz becomes less than 1 Gauss at Z = 37 cm.

Please comment. Wuzheng

# 180° Dipole Magnet

**N vs. I defined?**

**Thermal calculation complete**

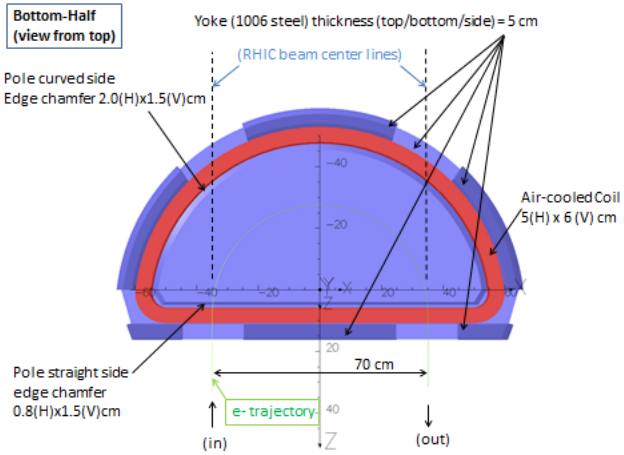


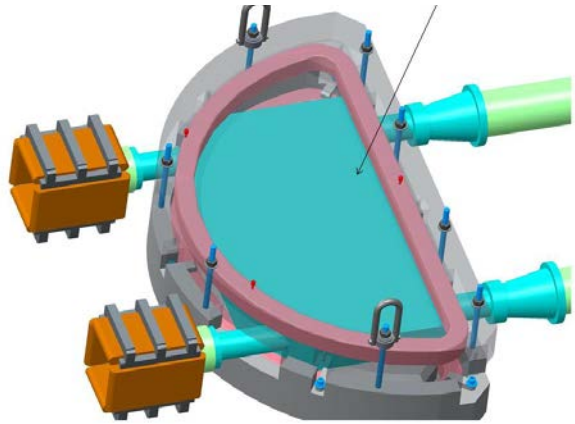

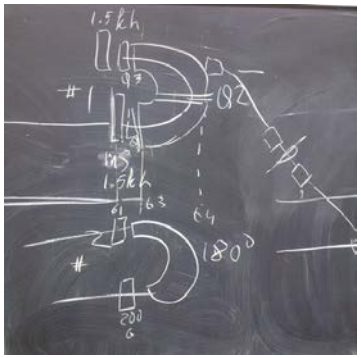

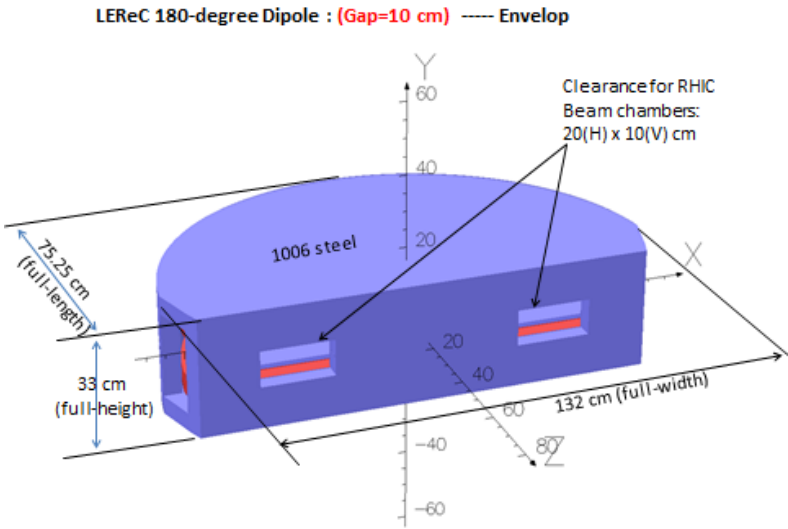


**Electron tracking results and field qualities along entire trajectory on R=2 cm curved cylinder:**

| | Ek = 5 MeV | Ek = 1.6 MeV |
|---|---|---|
| Total current per coil (Ampere-turn) | 2119.146 | 791.077 |
| Overall current density (A/mm²) (coil-pack cross-section: 5.0 x 6.0 cm) | 0.7064 | 0.2637 |
| Central Field deep inside magnet (Gauss) | 525.21 | 195.78 |
| Effective Magnetic Length (cm) | 109.43 | 109.57 |
| Full b1-integral (dipole) (G-cm) | 5.7471E4 | 2.1452E4 |
| Full b3-integral (6-pole) (G-cm) [Ratio to dipole integral] | 0.132 [2.30E-6] | 0.005 [2.44E-7] |
| Full bending angle as shown in tracking studies (required 180°) | 180.002° | 180.003° |

# Compensating Solenoid Corrector

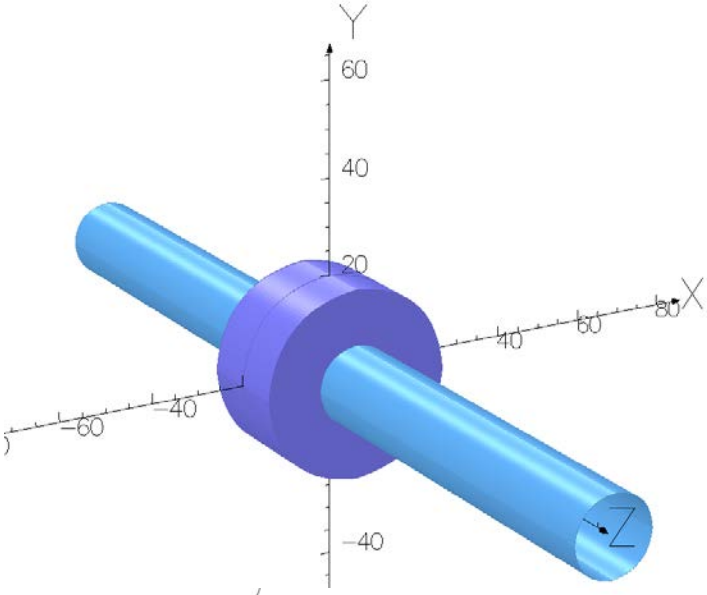


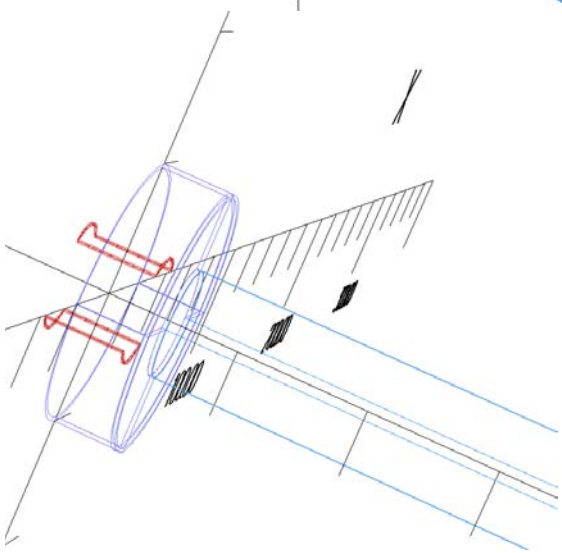

**Space between correctors to locate solenoid lead?**

Dipole correction 10.24 A-T
Per coil;  Straight section
Half-length: H1=6 cm
13 turns/.8 amps = 1 amp PS
(AWG #18 = 0.98 A/mm2)

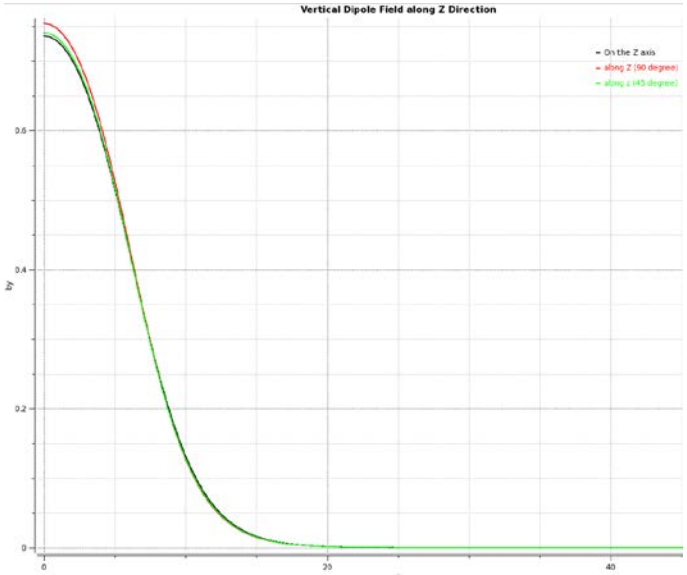

# NSLS I Equipment

- Compensating dipole for 21$^o$ e beam injection/extraction
- 375 Gcm/A
- Define Bl requirement for 21$^o$ and 180$^o$ compensation.

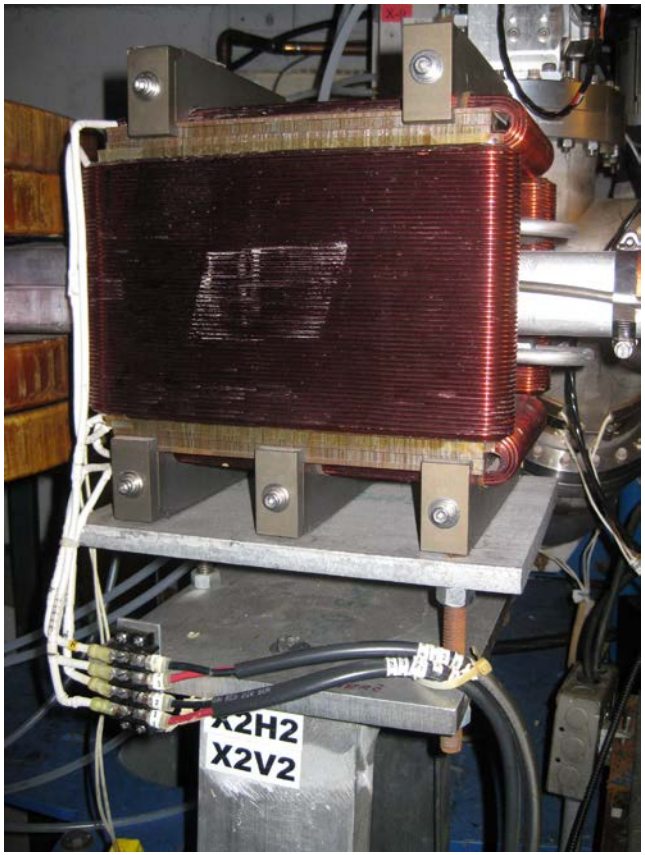


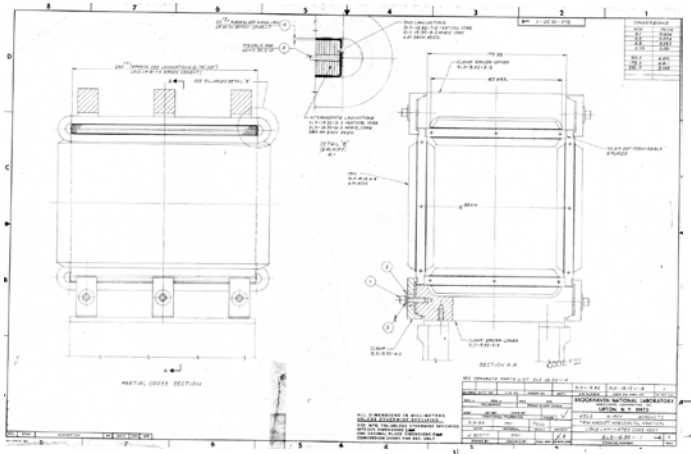

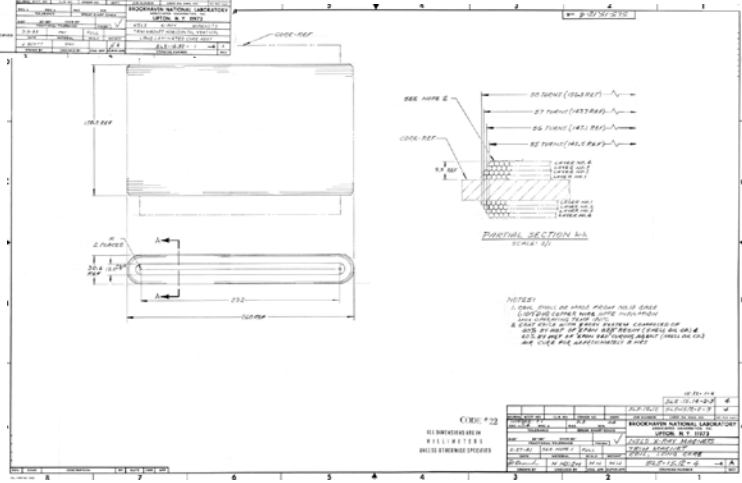

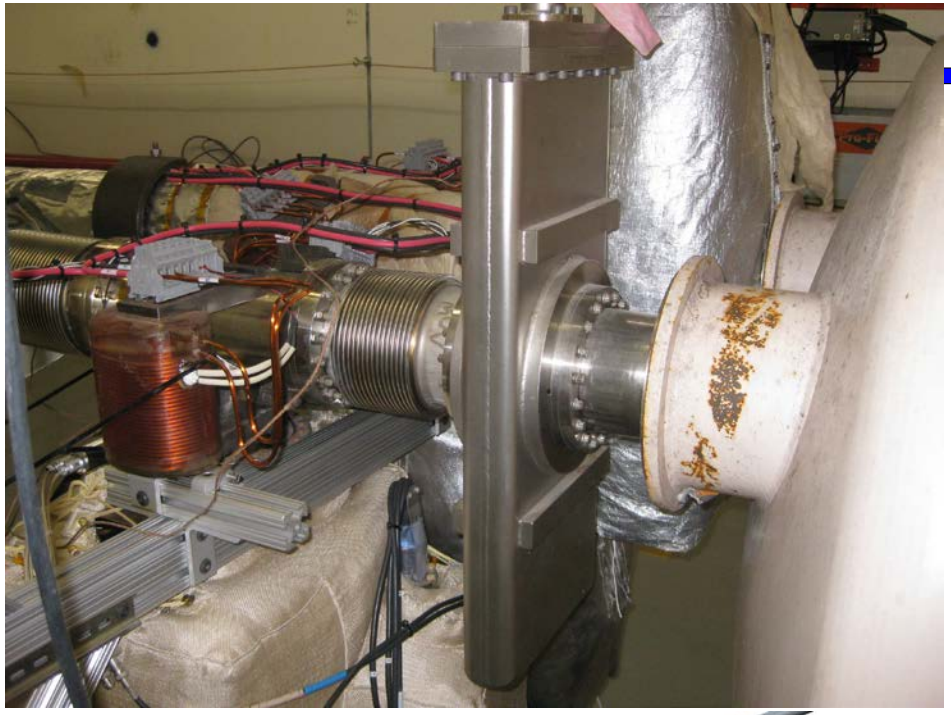

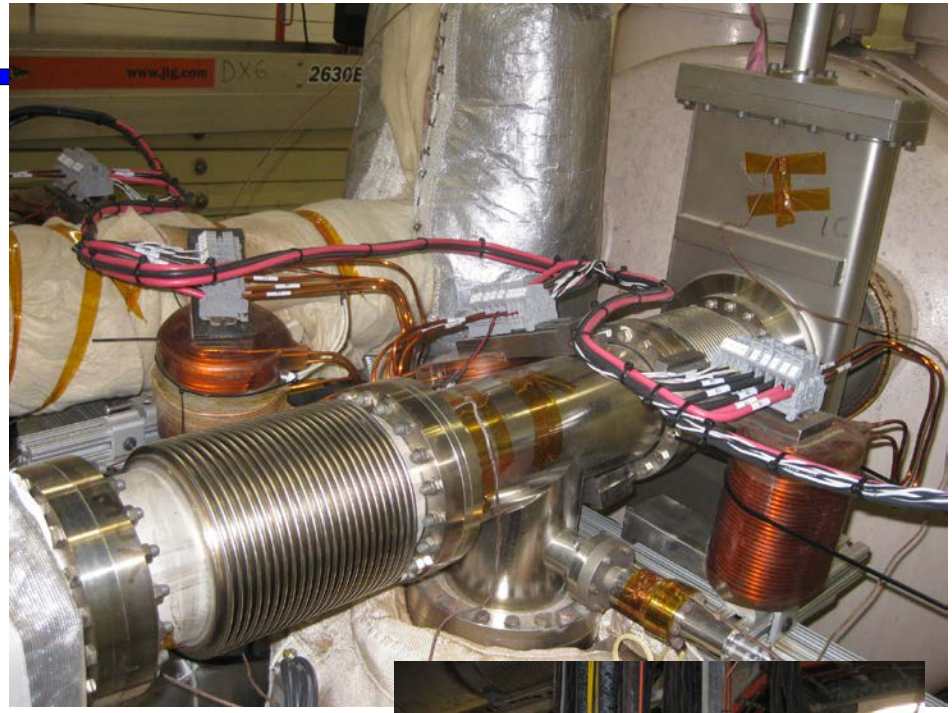

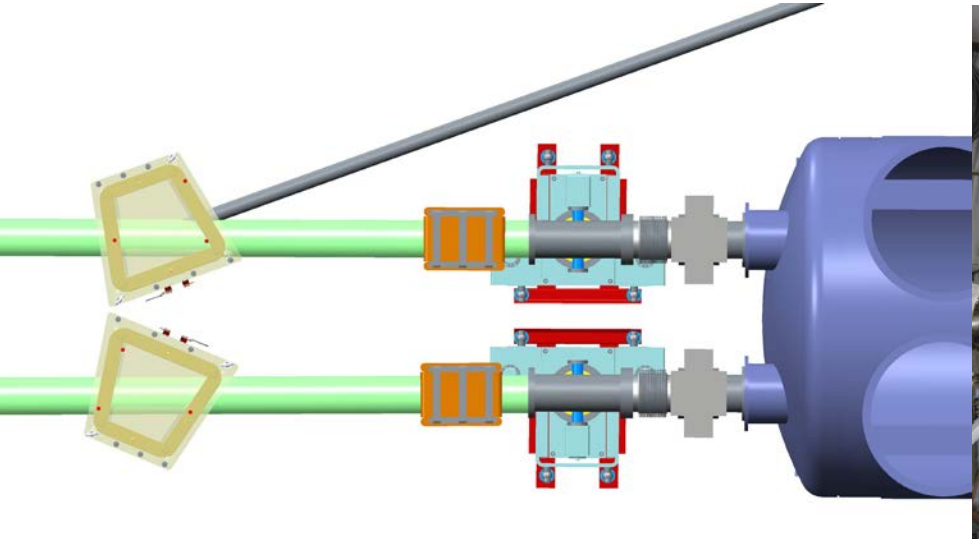

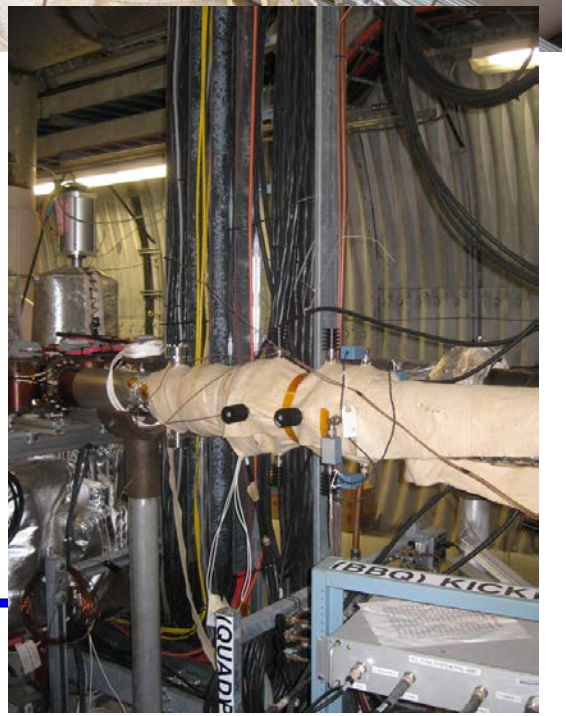


BROOKHAVEN NATIONAL LABORATORY

# Low Energy RHIC $e^-$ Cooling

# NSLS I Equipment

Beam dump line quadrupole(s)?

- ERL or
- NSLS I

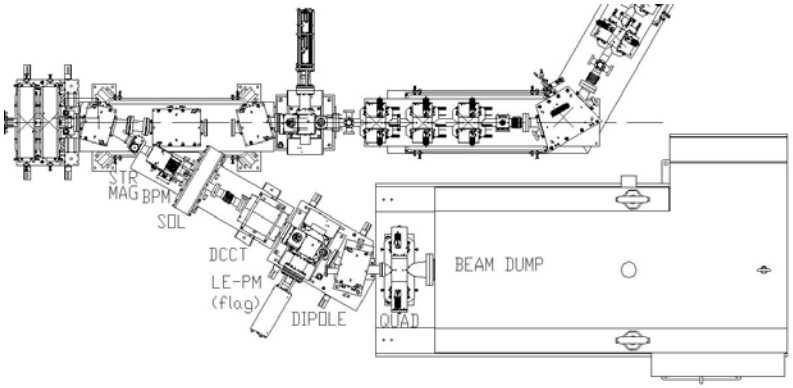

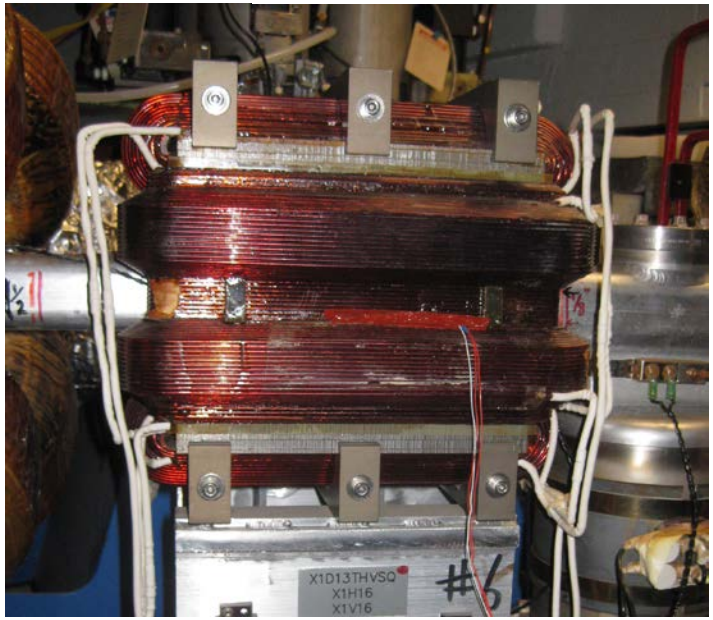


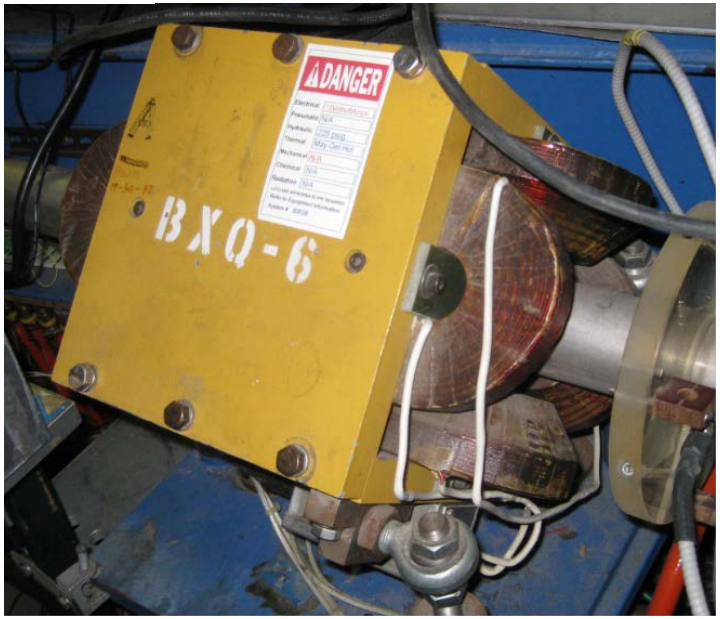

# Cooling Section BPM's

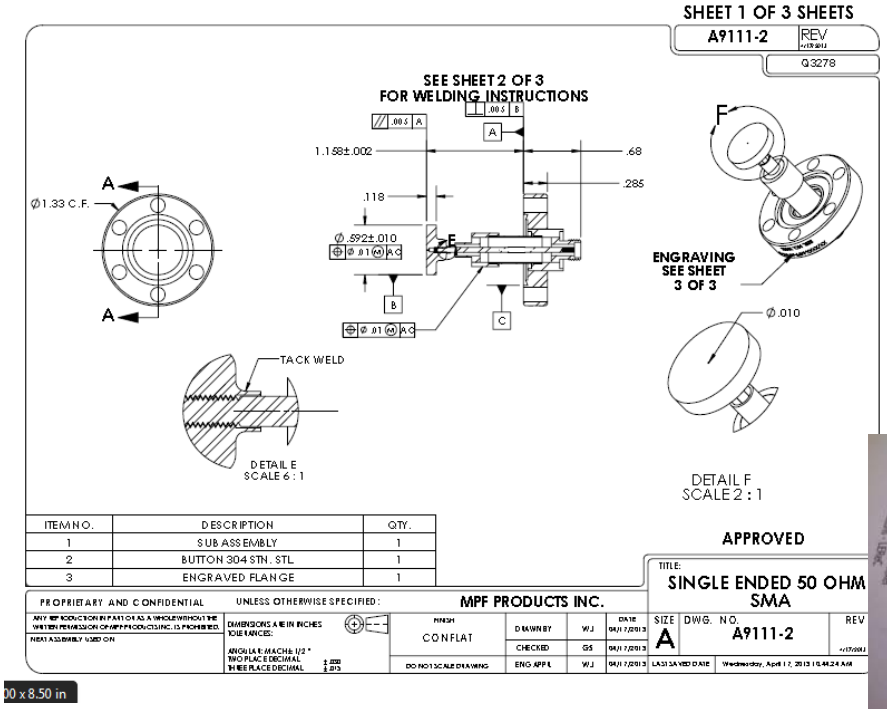


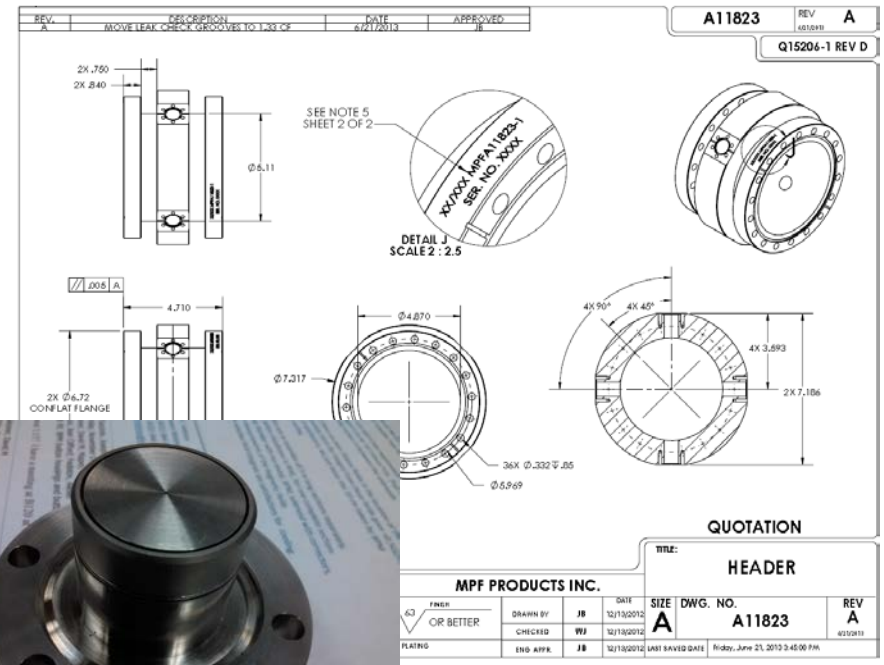

- Phone conference with MPF
- Larger diameter buttons on pick-up – 27 to 30 mm diameter
- Machined vacuum chamber, 304L, no threaded holes on flanges.
- Button hole size TBD microwave studio (D. Gassner).

# Vacuum Chamber/System Requirements:

- 5” (12.7 cm) OD vacuum chamber, bake-out temperature.
- No ion pump tees in the cooling section.
- One RHIC shielded bellows per solenoid
- Transitions to 10 cm aperture dipole magnets.
- Dipole magnet vacuum chambers.
- 6 Profile Monitors, screen size??

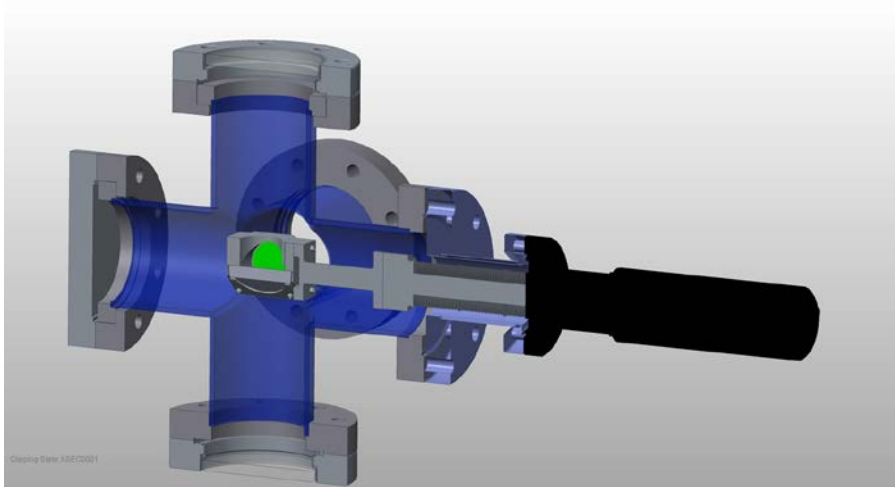

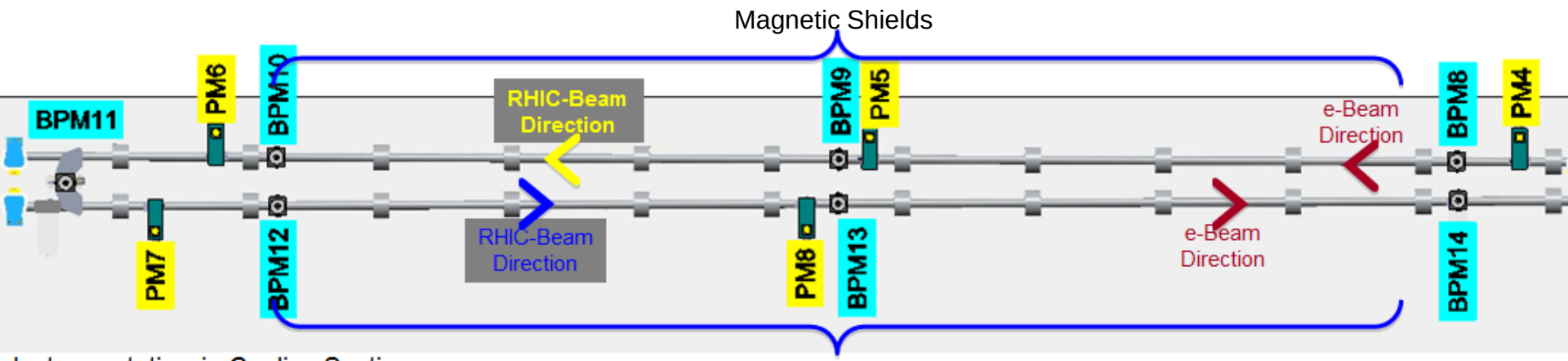


Instrumentation in Cooling Sections
BPM= 7, YAG (PM)= 5, BLM as needed

# Beam Dump Line to Vacuum Valve:

What components can we take from ERL extraction line? To be determined.

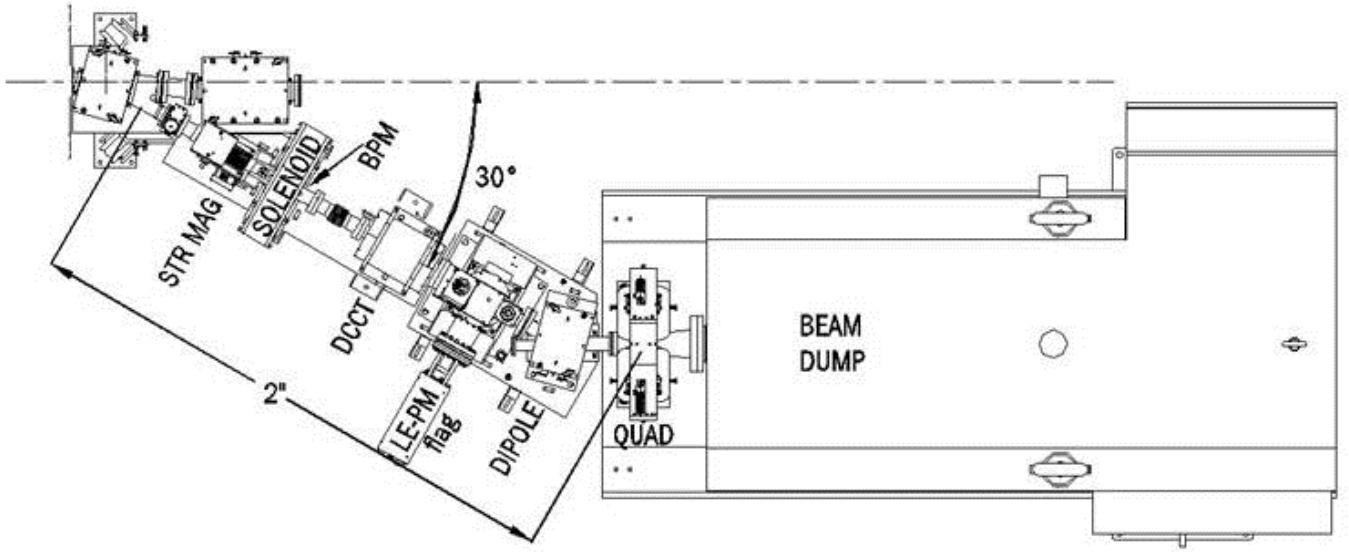


20o dipole
Add 10o dipole?
Larger aperture

Extraction Line Components

Per Alexei, LEReC aperture is 9.0cm (3.6"). ERL BD is 4.0" dia, upstream of quad is 2.0". The solenoid and quad have larger apertures than 2".
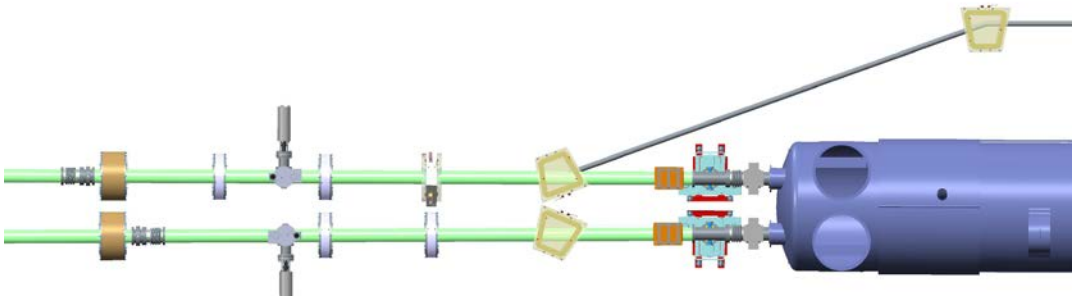
| | | |
|---|---|---|
| GM | Extraction Dipole - 20°w/ chamber(1) | new |
| GM | Steering magnet (1) | new |
| GM | Solenoid (1) | from ERL extraction |
| DG/TM | BPM (1) | new |
| DG/TM | DCCT (1) | new |
| DG/TM | Profile Monitor (1) | new |
| GM | Dipole magnet - 20° w/ chamber (1) | new |
| - | Quad (1) | from ERL extraction |
| MM | Bellows (2) | new |