Low-energy RHIC electron Cooler (LEReC)

Cryo

March 13, 2014

ERL in LEReC

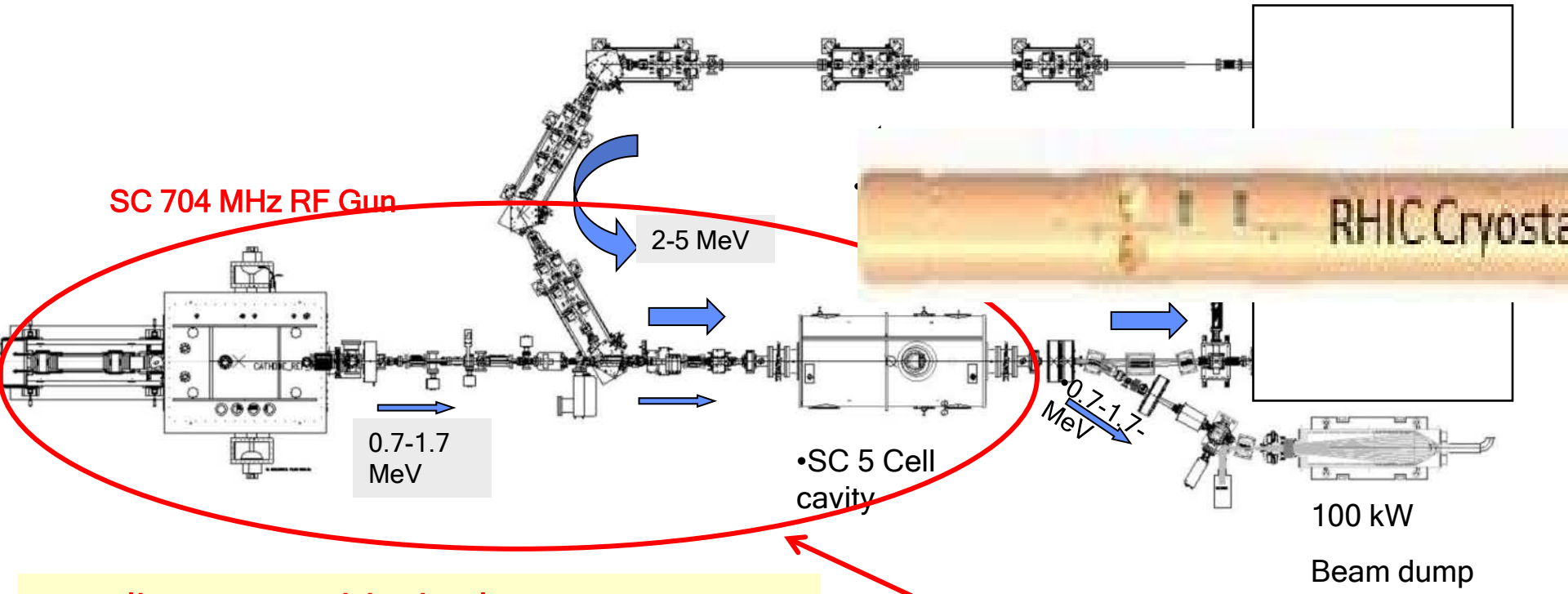

Baseline: ERL with the loop

-Up to 1.8 MeV kinetic energy:
Gun-to-dump, no ER

-Starting 2MeV:
gun at 670kV, returning beam 2MV;
keep ratio 3:1 fixed

LEReC
SRF accelerator

Option 1

ERL gun

Option 1

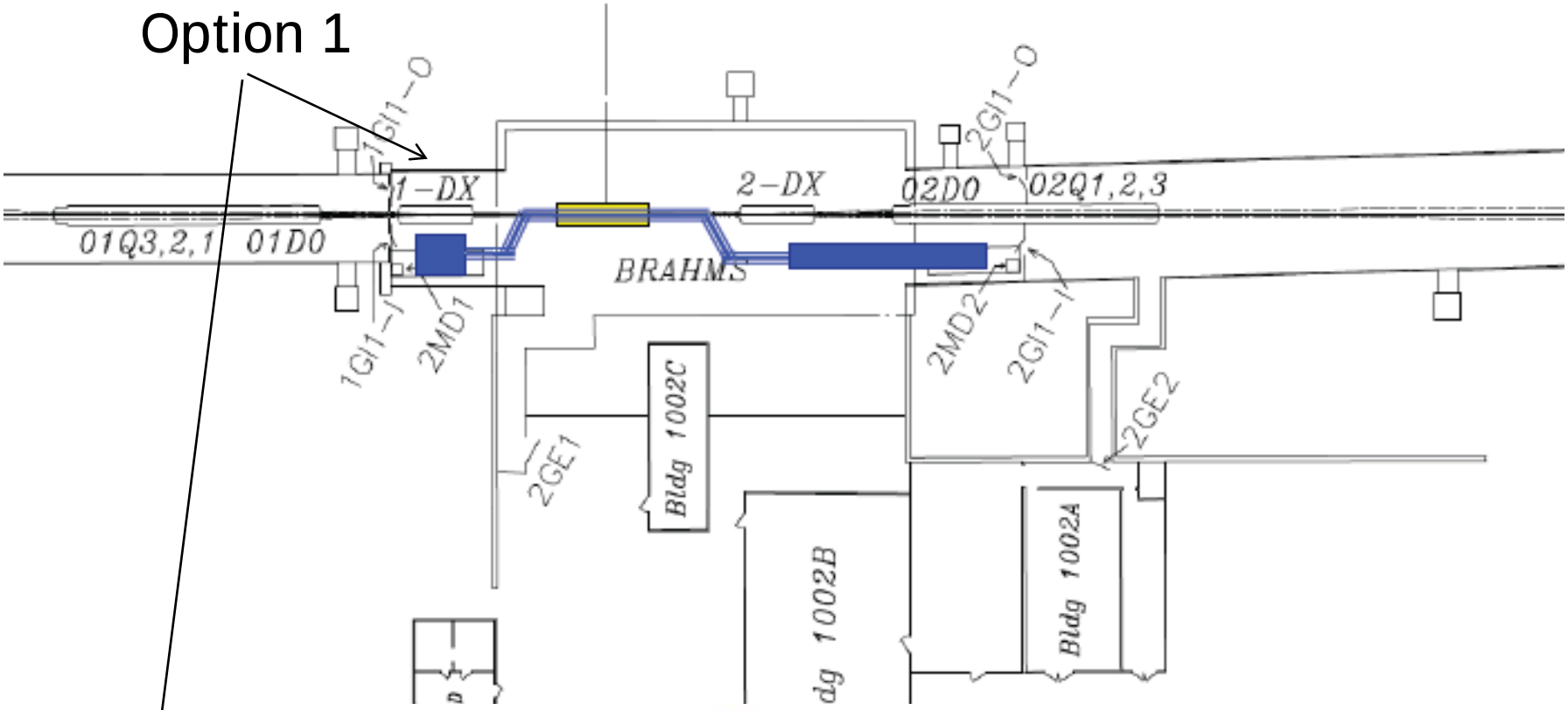

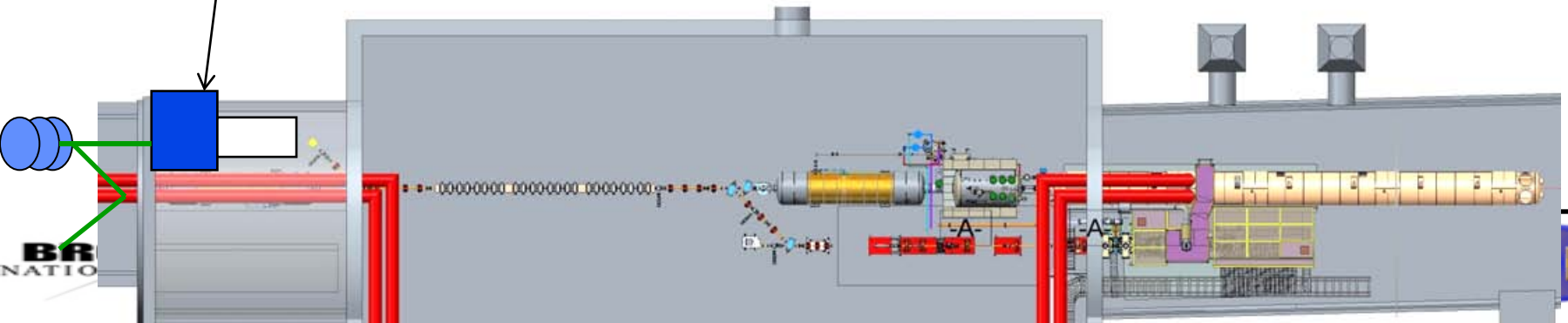

Option 2

ERL gun
Option 2

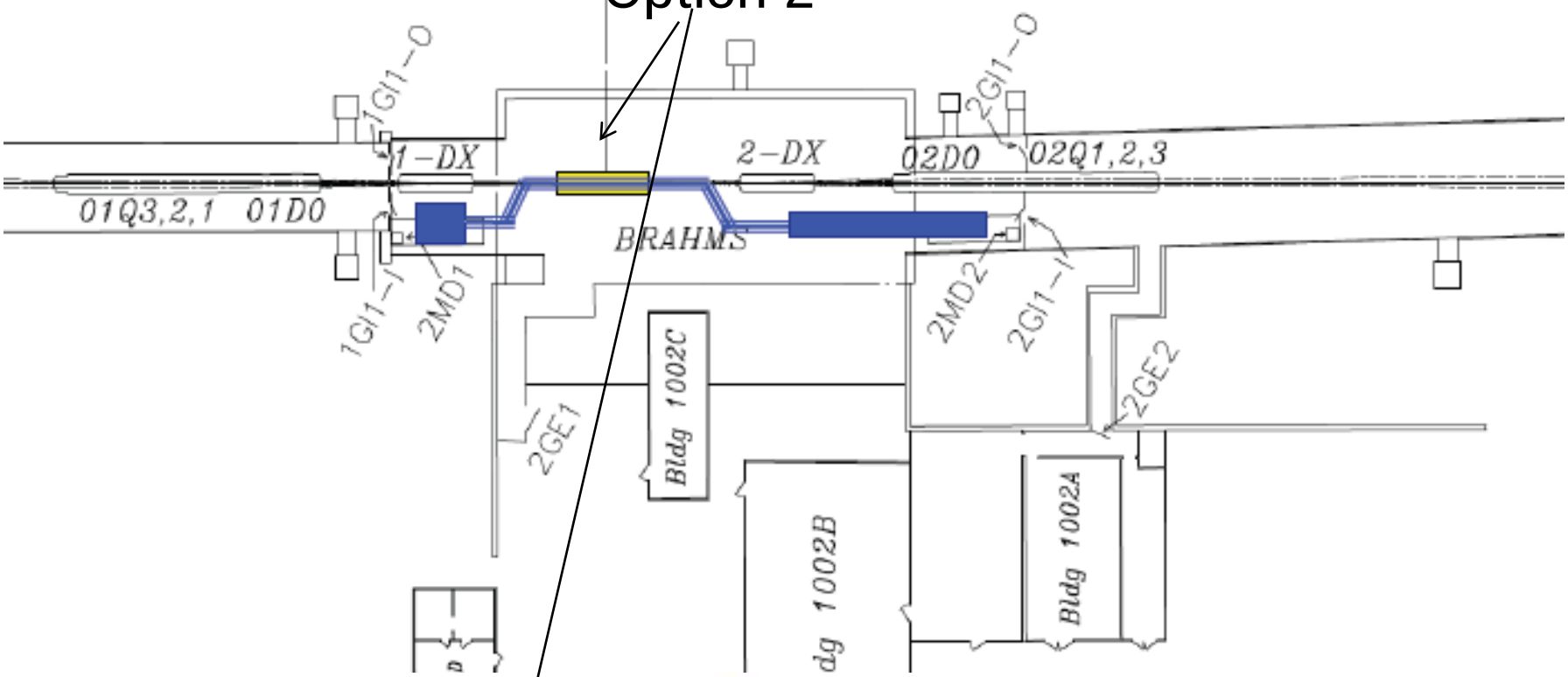

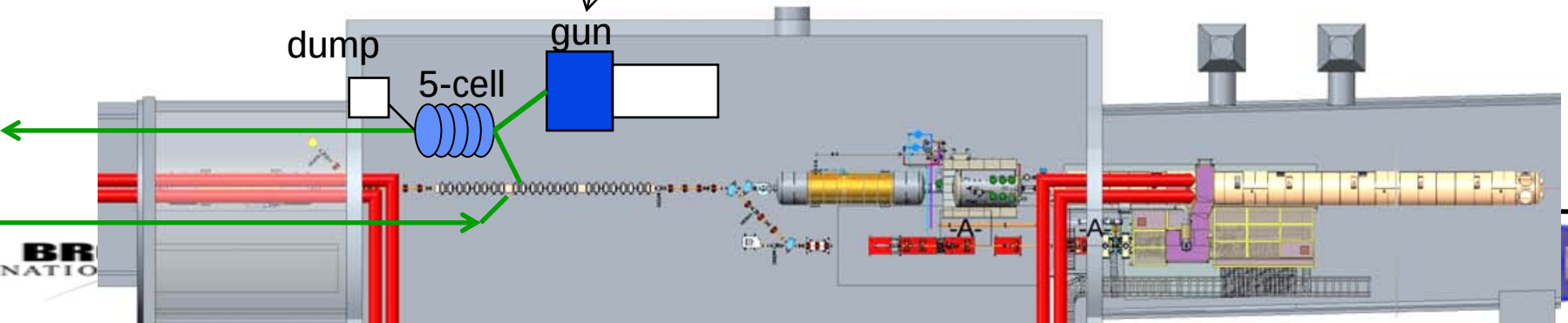

Option 2

ERL gun

Option 2

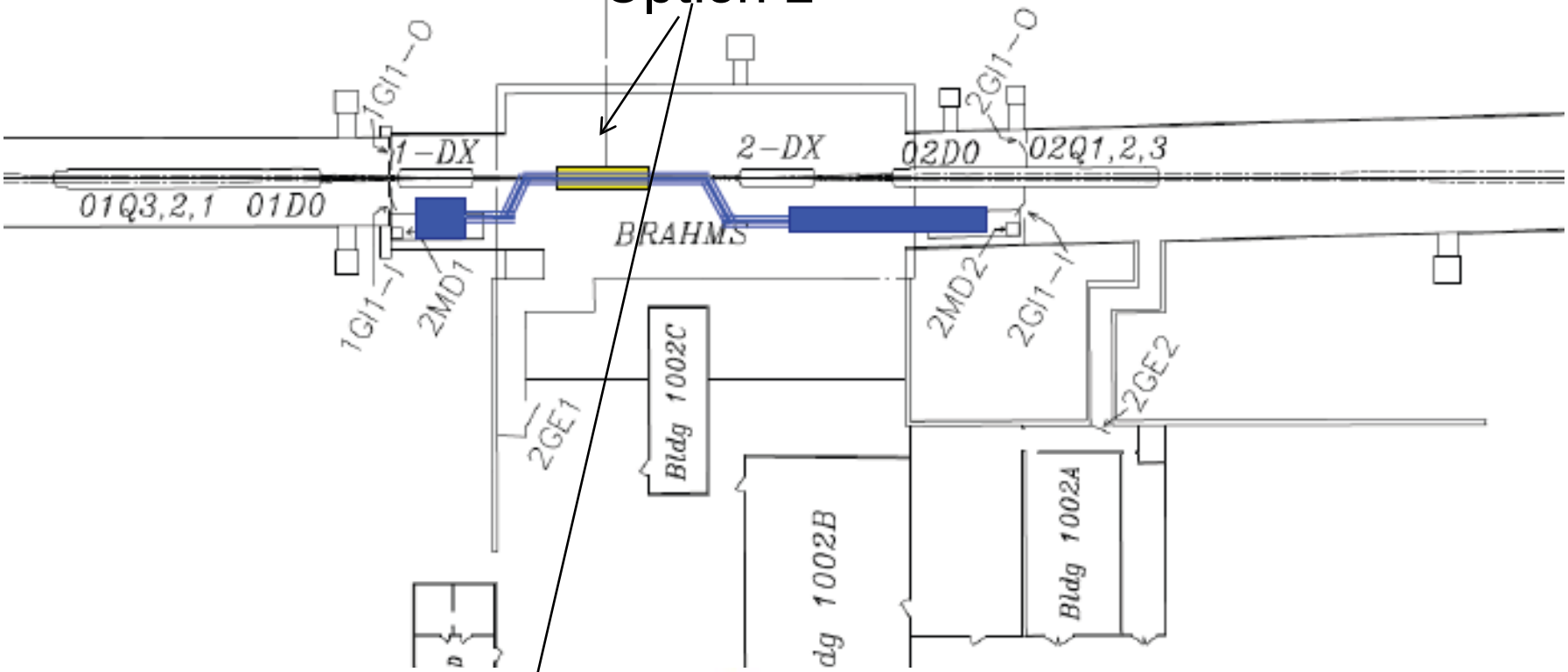

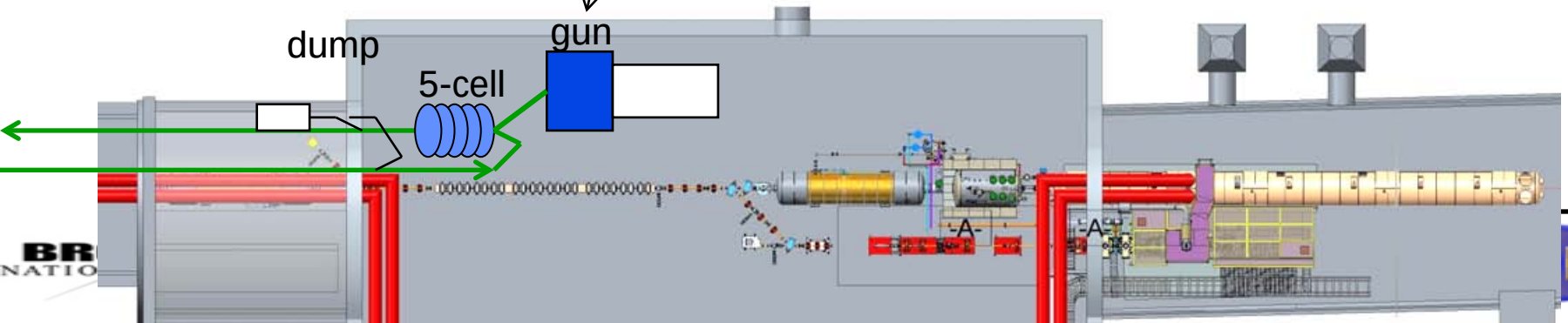

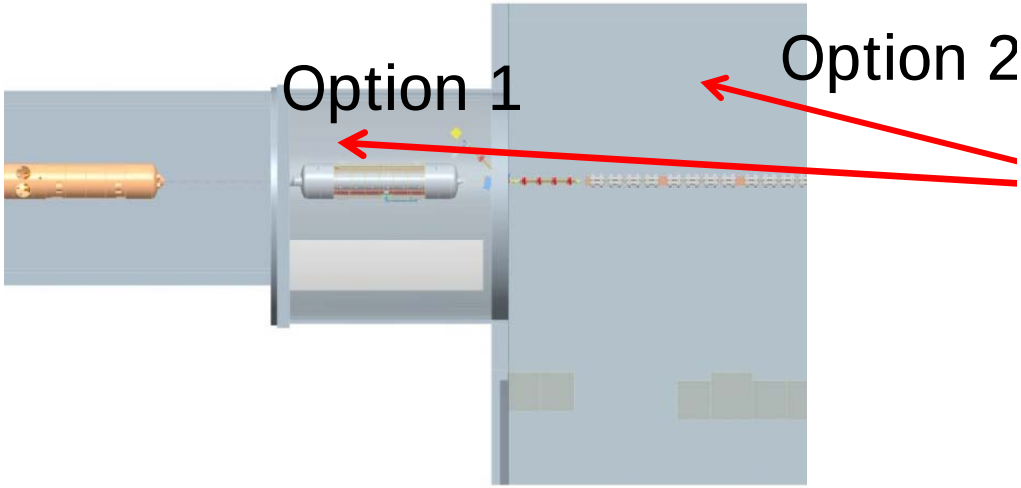
Option 1
Option 2

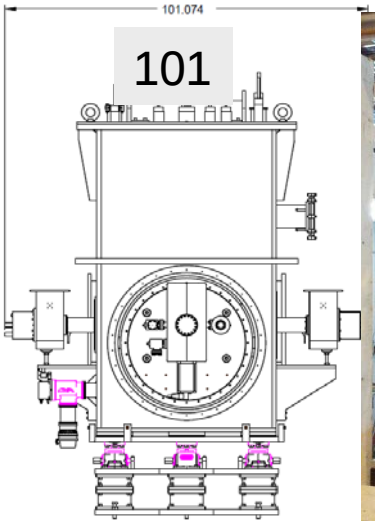
101.074
101

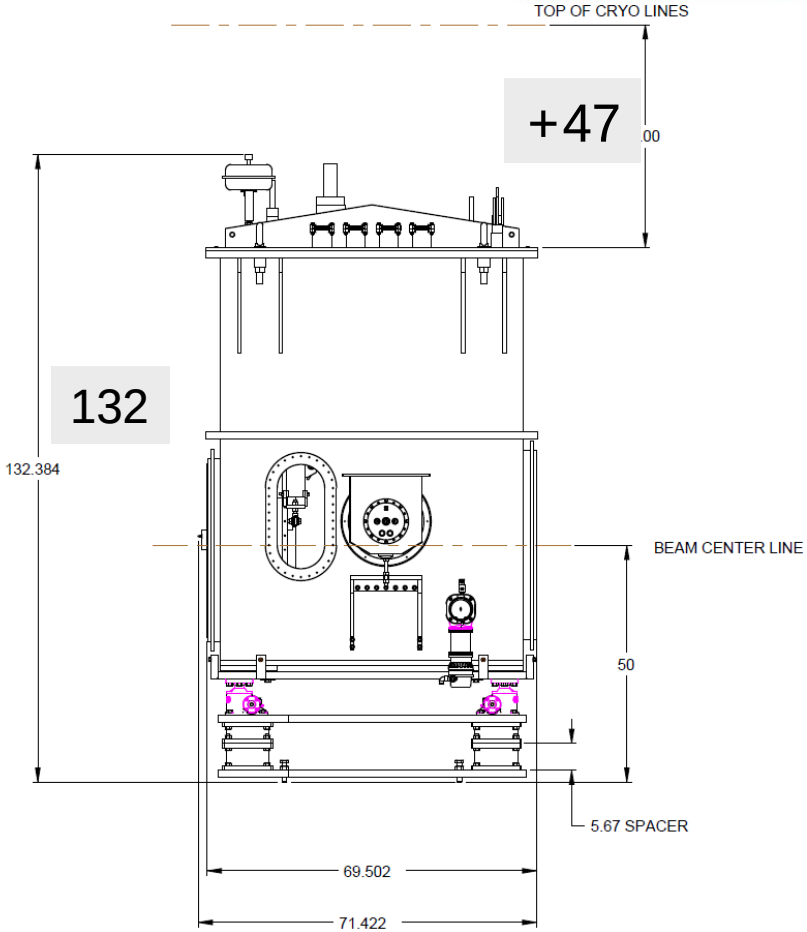
TOP OF CRYO LINES
+47
132
132.384
BEAM CENTER LINE
50
5.67 SPACER
69.502
71.422

?
?

Location of SRF gun in DX area (Option 1)

Vito De Monte

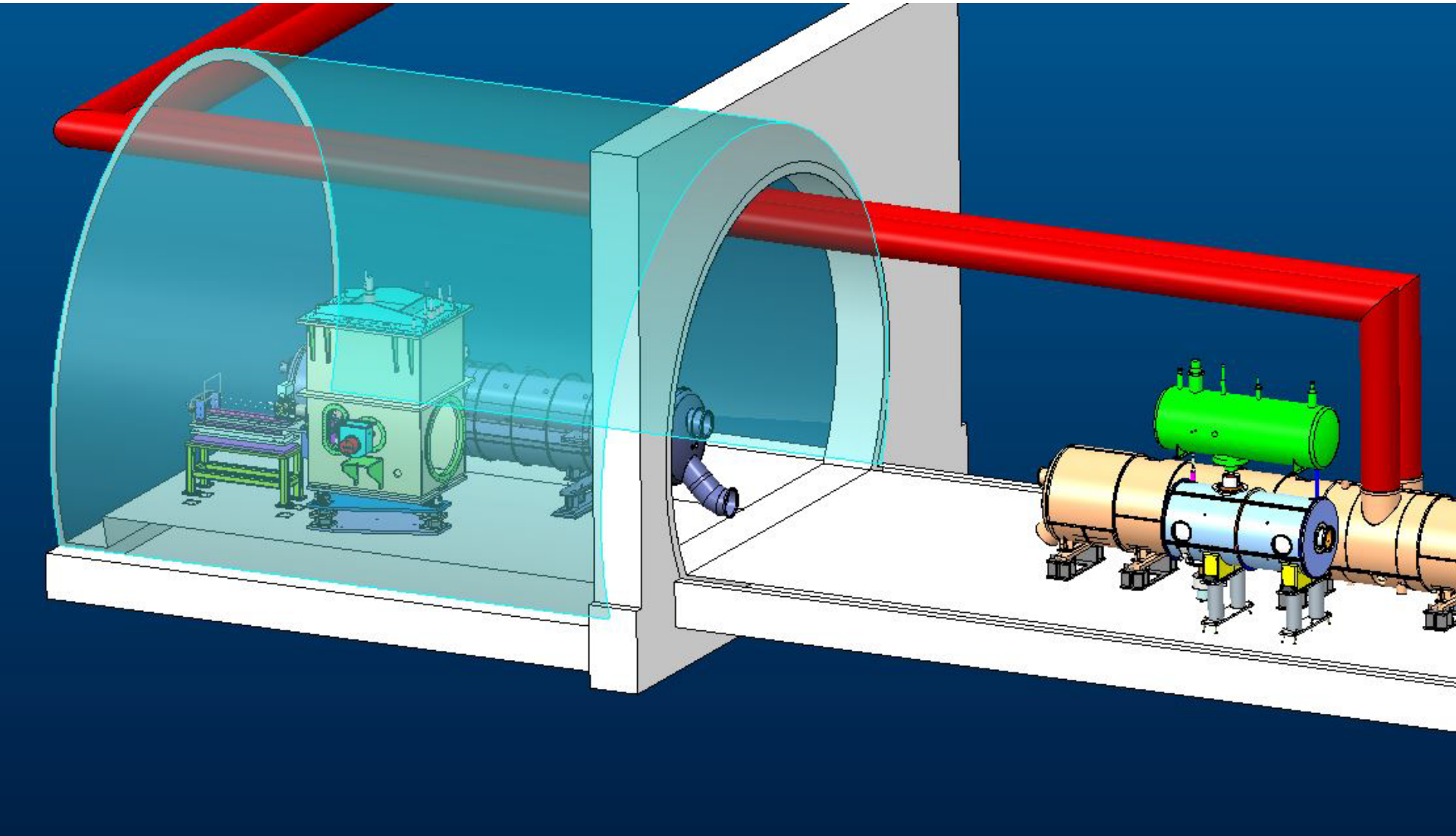

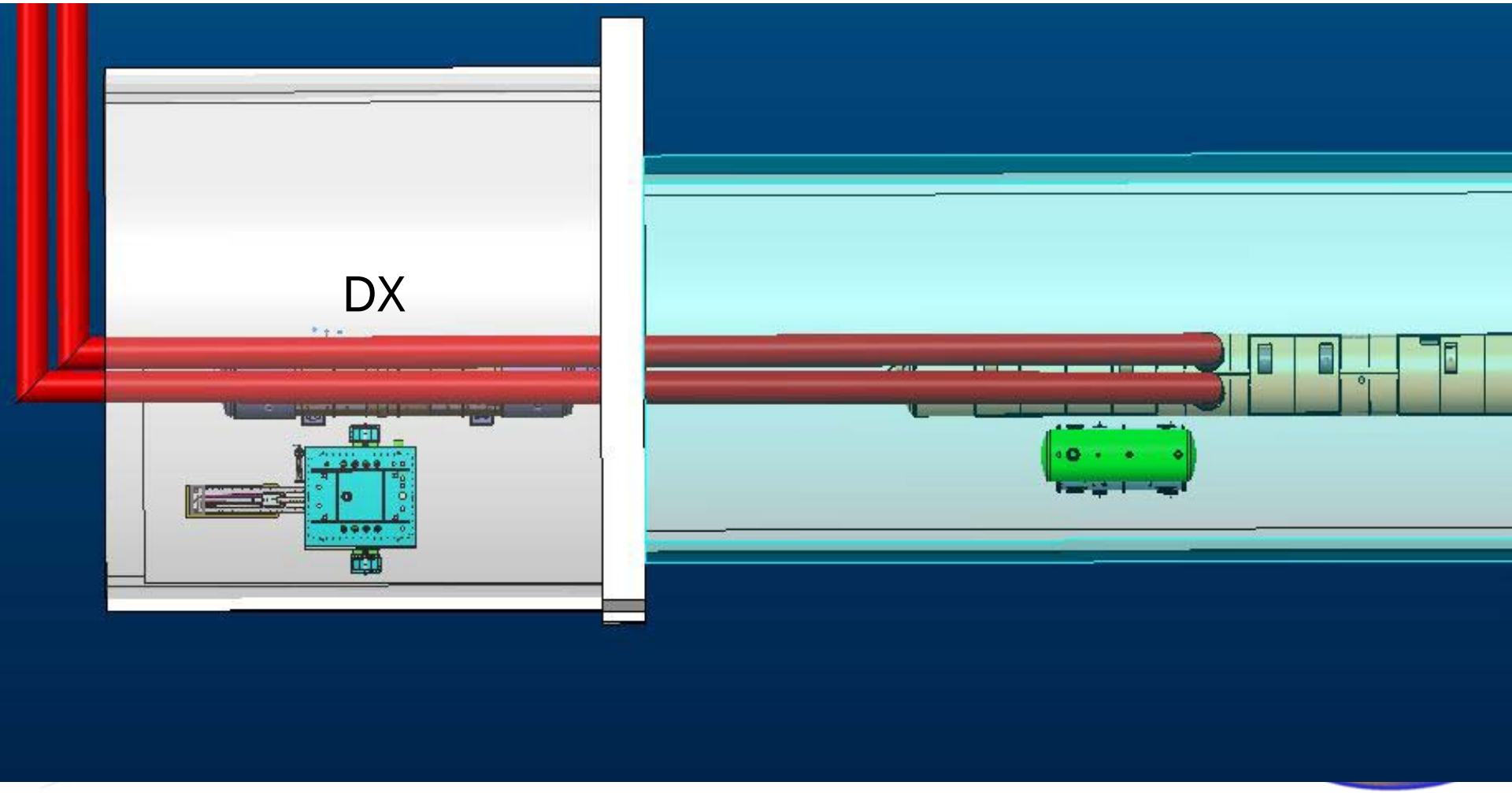
DX

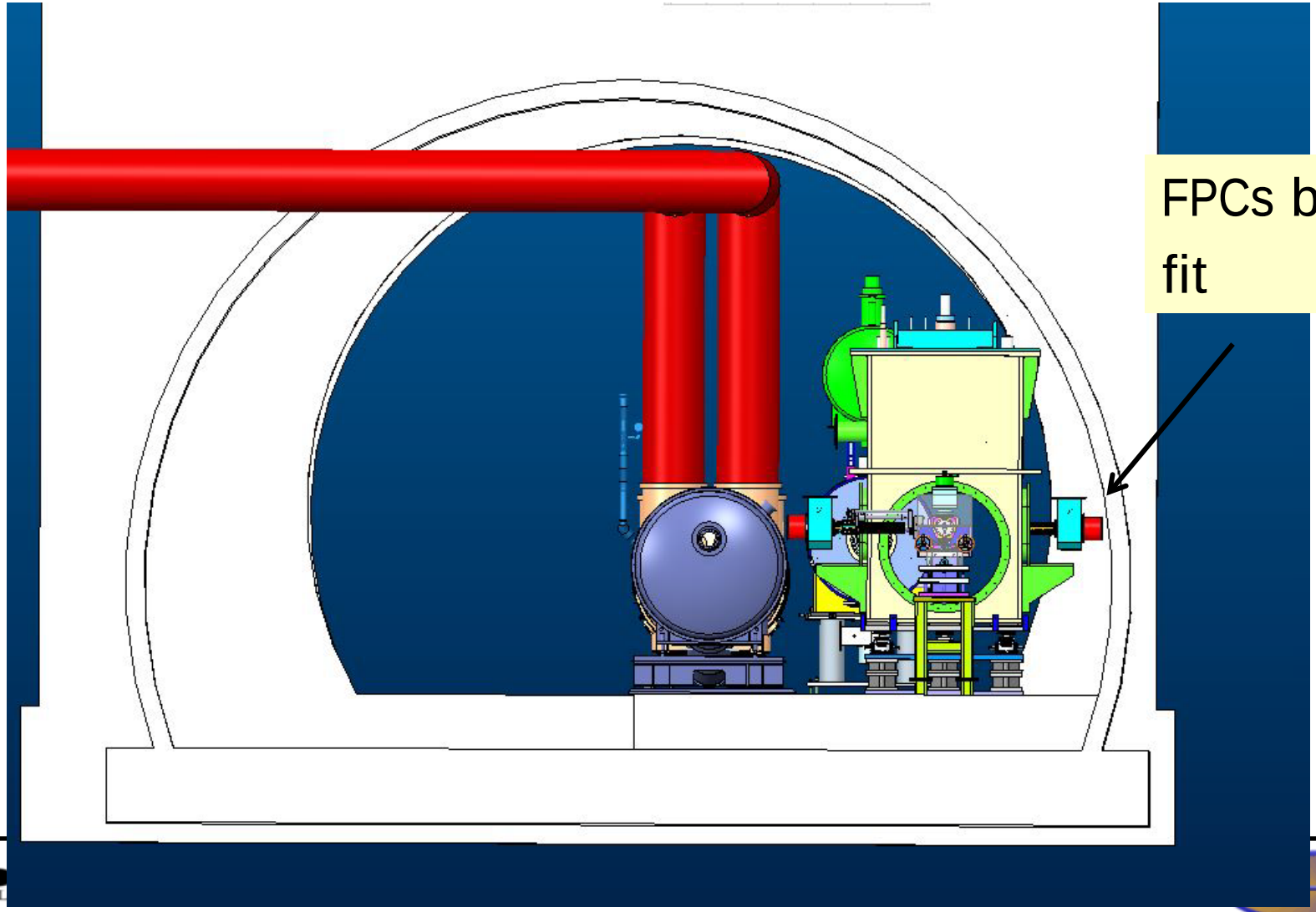
FPCs barely fit

Option 2

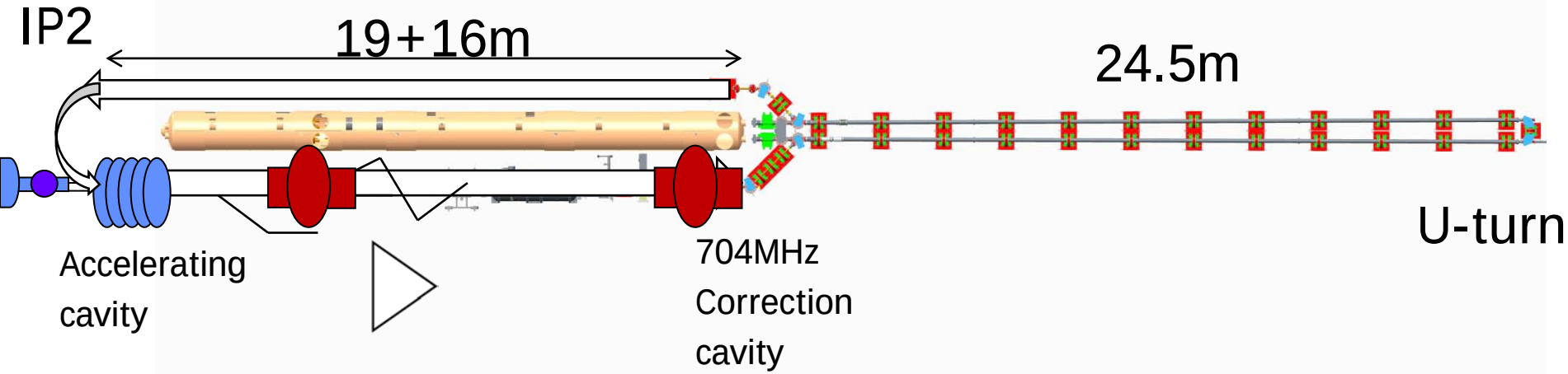

Cavity around 3m from IP2:

Total path: 24.5x2+19x2+1+2x4+16x2=128m

ERL constraint:

Path from cavity and back multiple of 32m

Cooling in Yellow and Blue:

Constraint on U-turn location

Puts SRF gun near IP

Option 2: 704MHz gun near IP

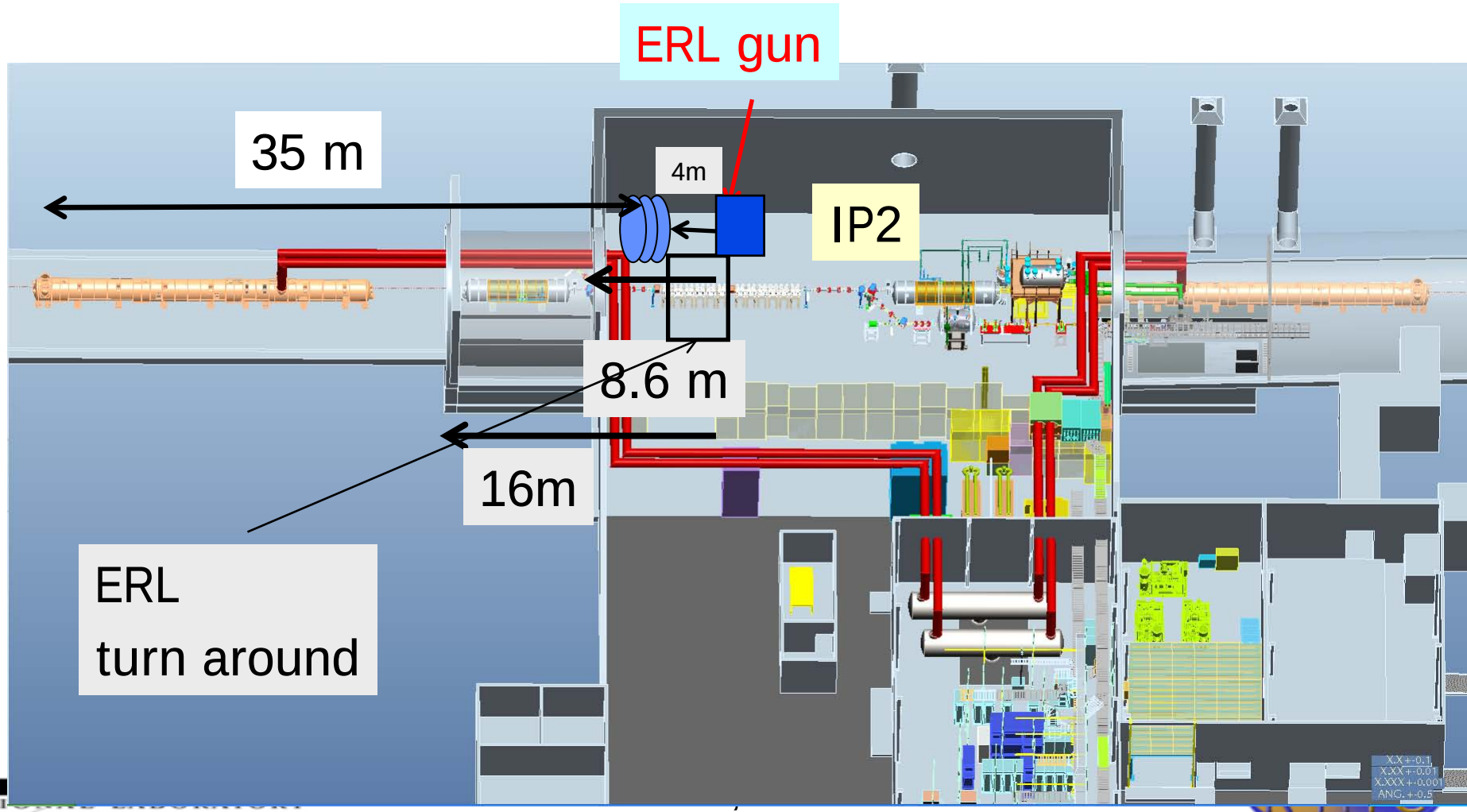

Option 2

ERL gun

Option 2

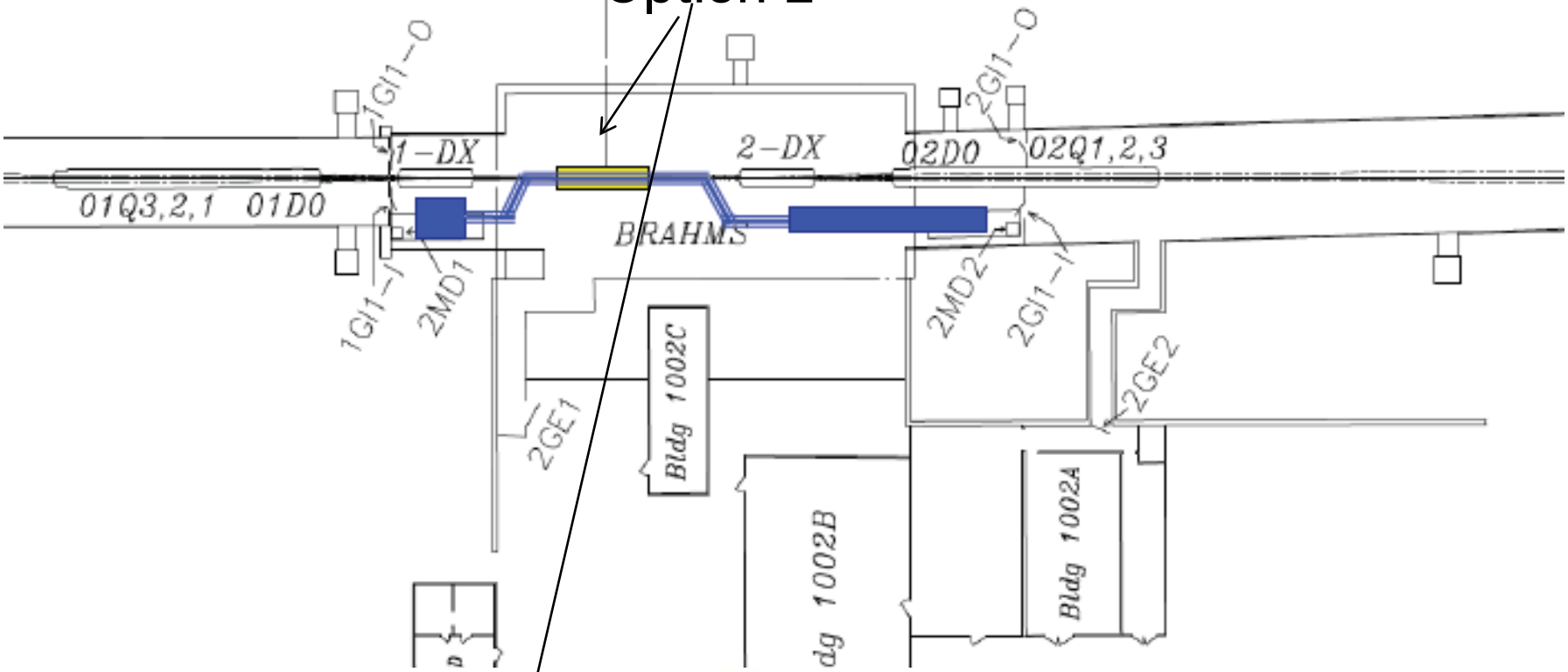

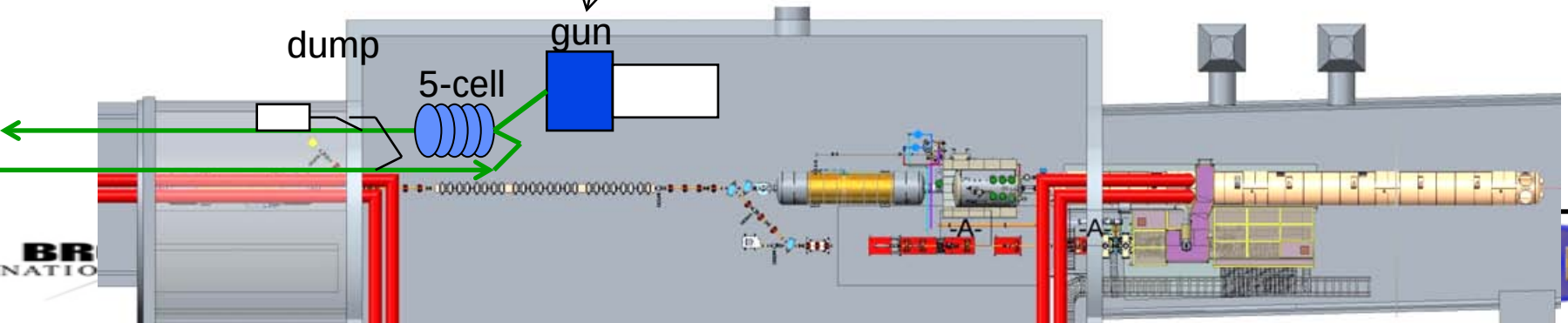

BROOKHAVEN NATIONAL LABORATORY

Office of Nuclear Physics

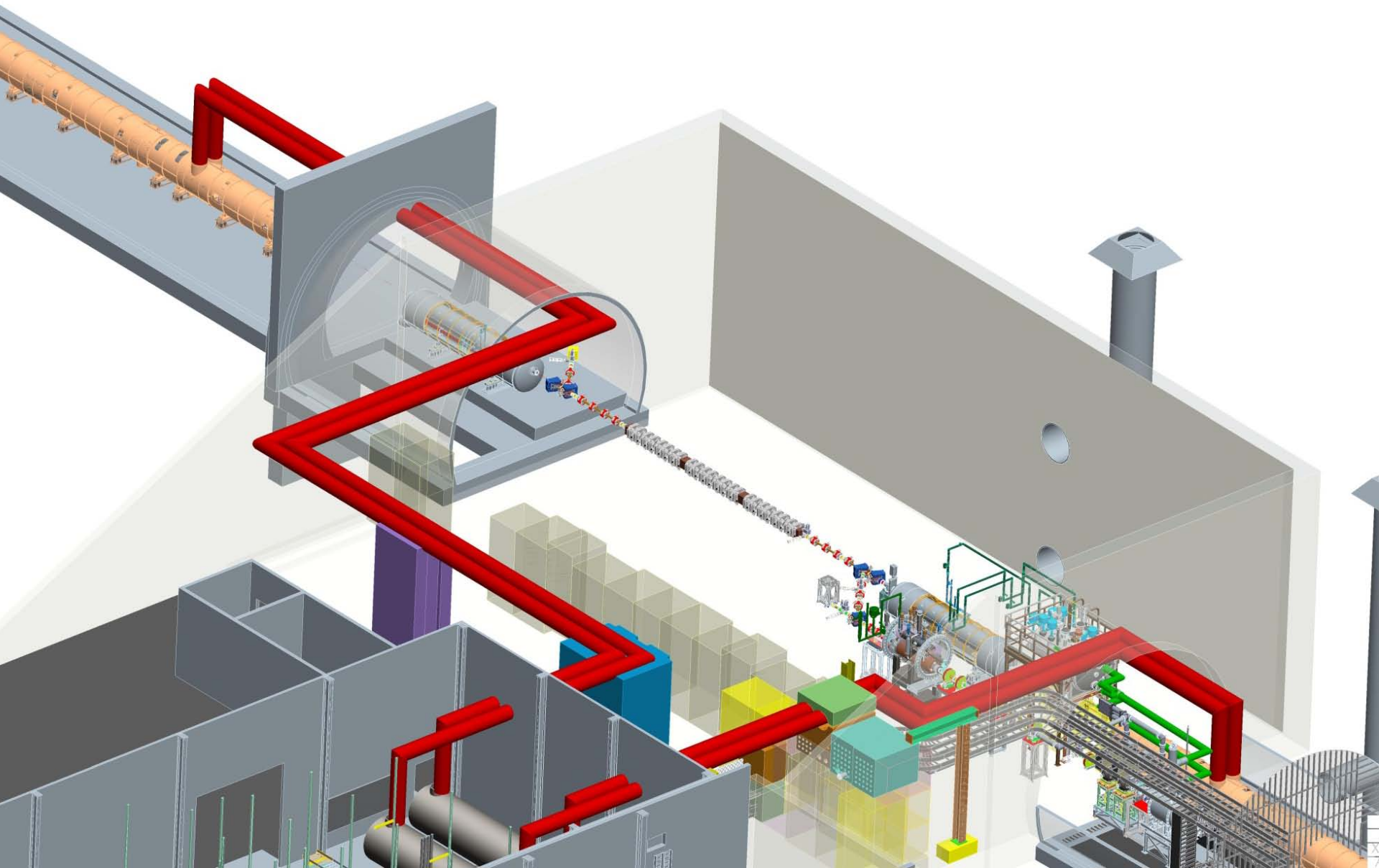

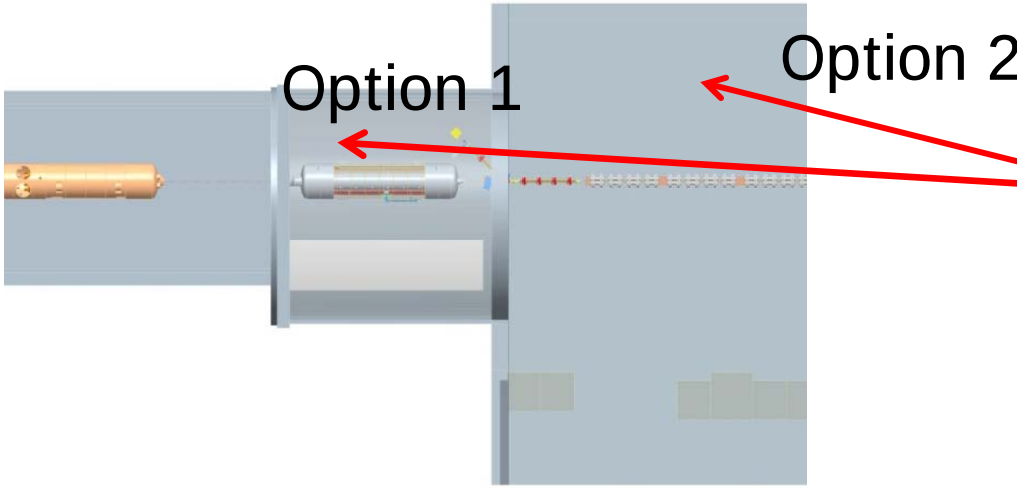
Option 1
Option 2

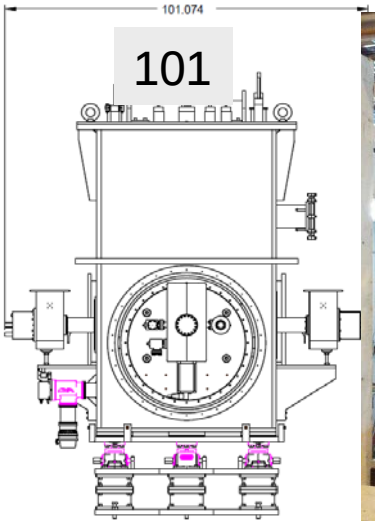
101.074
101

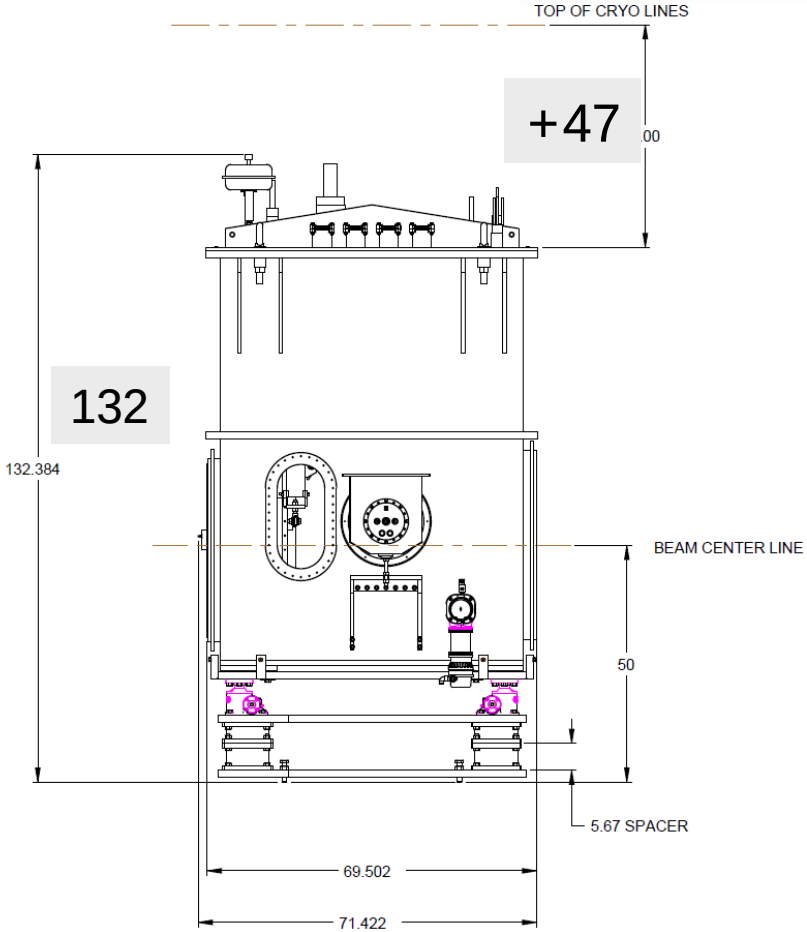
TOP OF CRYO LINES
+47
132
132.384
BEAM CENTER LINE
50
5.67 SPACER
69.502
71.422

?
?

Option 2

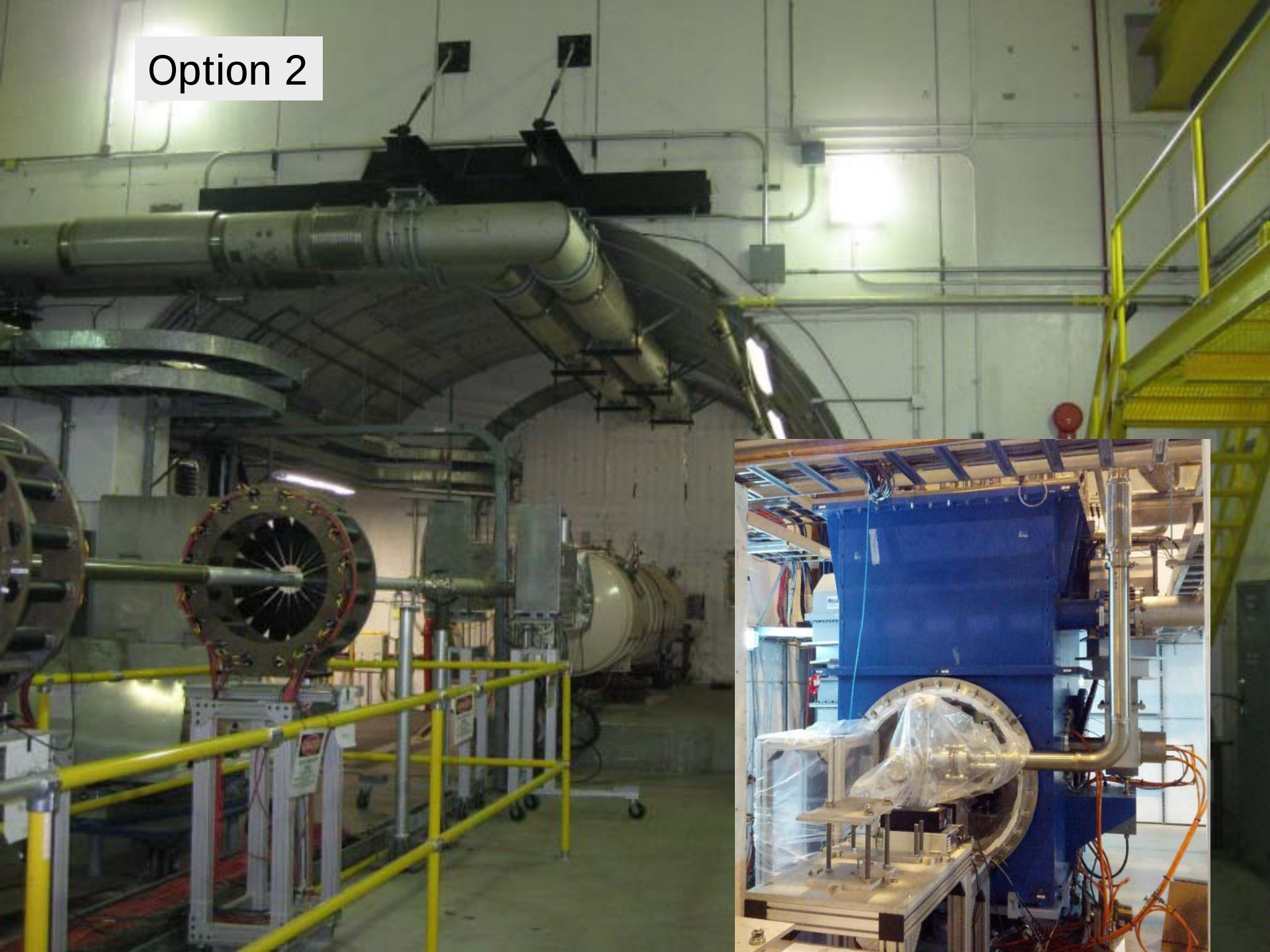

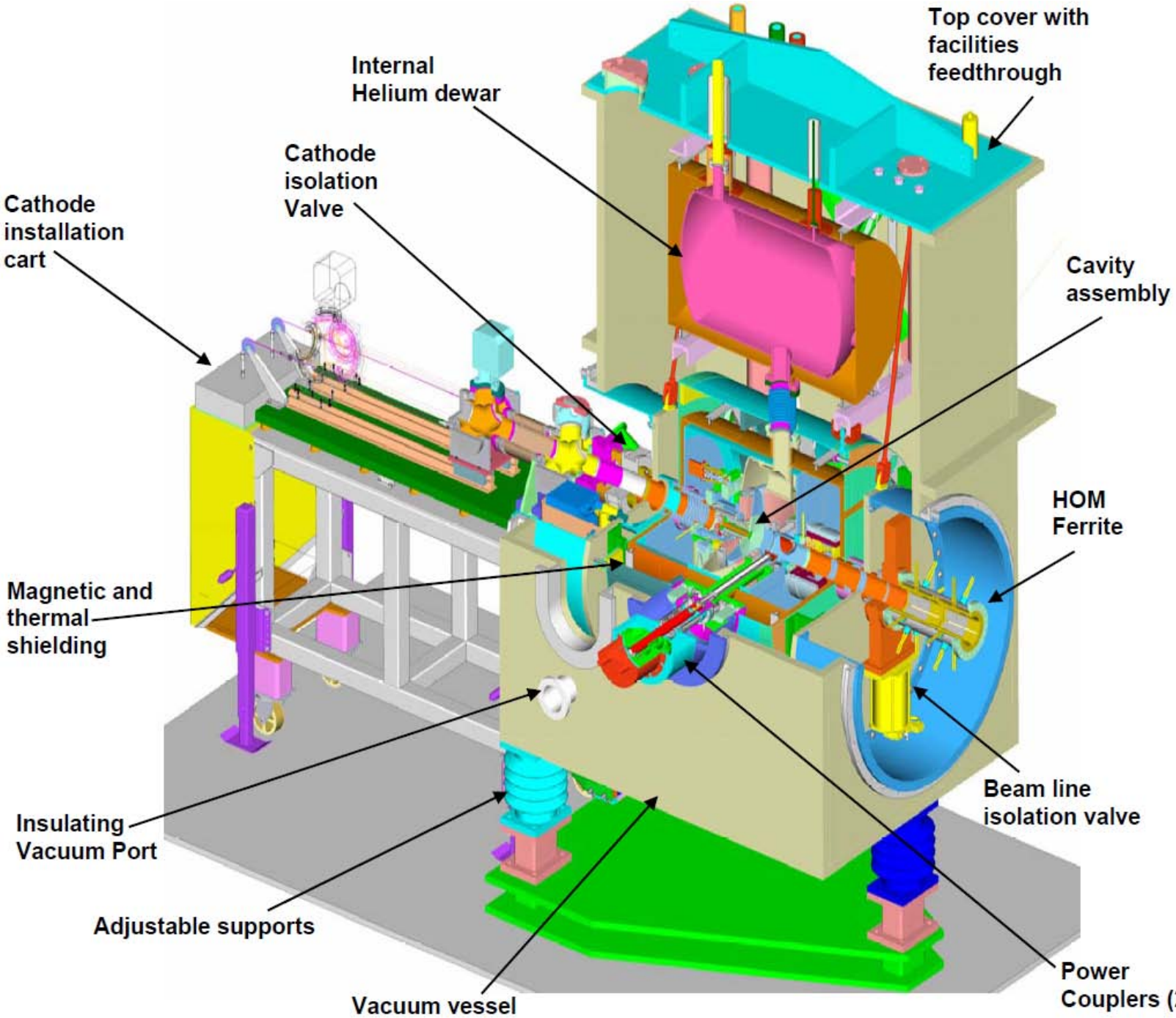
Top cover with facilities feedthrough
Internal Helium dewar
Cathode isolation Valve
Cathode installation cart
Cavity assembly
HOM Ferrite
Magnetic and thermal shielding
Beam line isolation valve
Insulating Vacuum Port
Adjustable supports
Vacuum vessel
Power Couplers (2)

MEGA
MEGA
MEGA
VENT/GAS FILL

Gun-to-dump mode:

Gun Energy, MeV	Qe/bunch	Gun Beam power
1.0		
1.2		
1.4	< 100pC	
1.6	100 pC	
1.8	100 pC (30 bunches)	50 kW

ERL mode:

Gun energy, kinetic MeV	Final energy, Kinetic, MeV	Qe/bunch, pC	Gun beam power
0.67	2	100 pC	
1	3	100-150 pC	
1.33	4	200 pC	
1.67	5	333 pC (18 bunches)	93 kW

Gun: 100kW with 50kW/coupler

Discussed items

704 MHz Gun RF couplers:

Need to work with 50kW per coupler up to 2MV: Several options?

5-cell cavity:

No modifications needed if used in ERL mode.