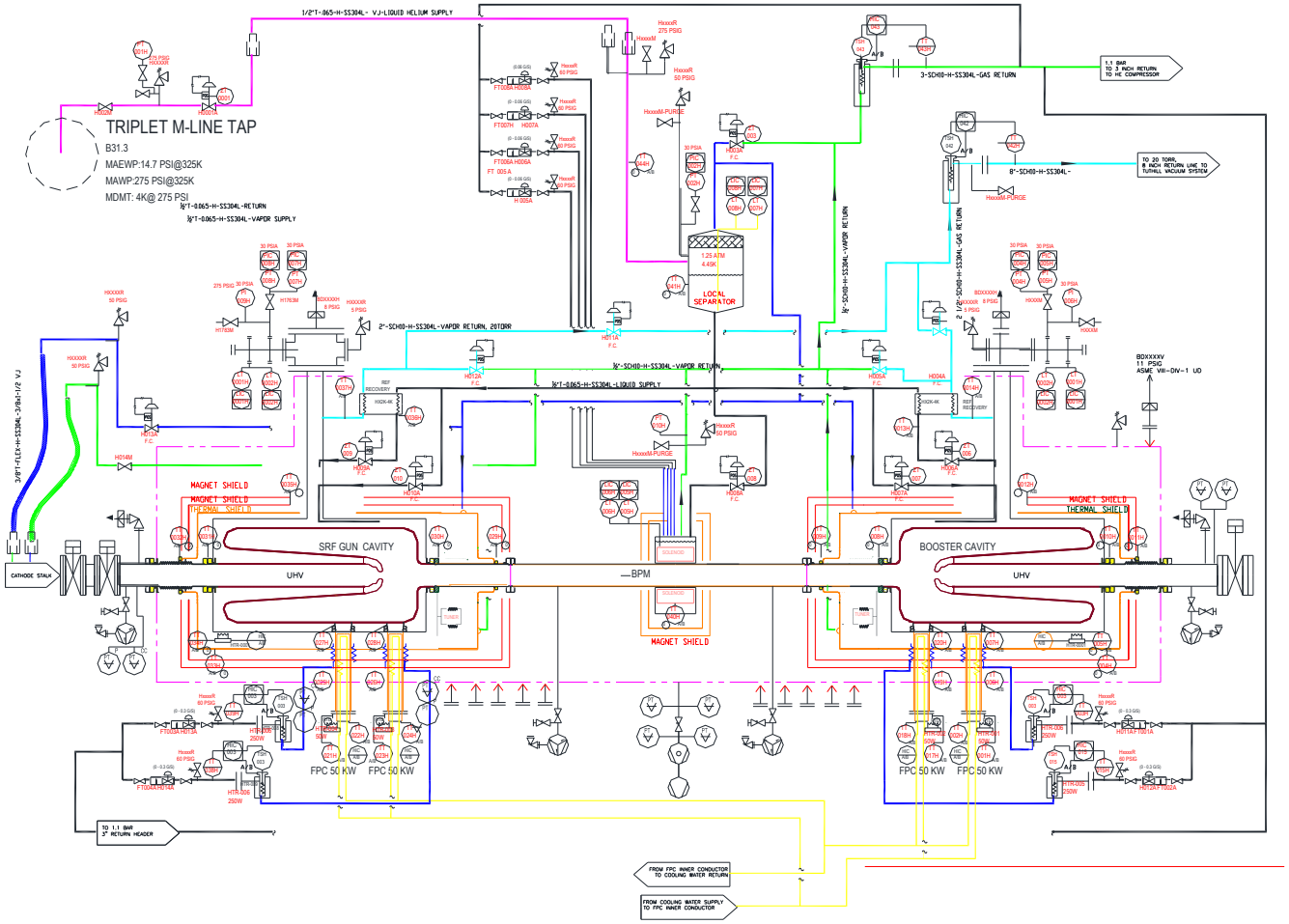
TRIPLET M-LINE TAP
B31.3
MAEWP:14.7 PSI@325K
MAWP:275 PSI@325K
MDMT: 4K@ 275 PSI
1/2"T-.065-H-SS304L- VJ-LIQUID HELIUM SUPPLY
3/8"T-.065-H-SS304L-RETURN
3/8"T-.065-H-SS304L-VAPOR SUPPLY
2"-SCH10-H-SS304L-VAPOR RETURN, 20TORR
3-SCH10-H-SS304L-GAS RETURN
1.1 BAR
TO 3 INCH RETURN
TO HE COMPRESSOR
8"-SCH10-H-SS304L-
TO 20 TORR,
8 INCH RETURN LINE TO
TURNALL VACUUM SYSTEM
LOCAL SEPARATOR
1.25 ATM
4.45K
MAGNET SHIELD
MAGNET SHIELD
THERMAL SHIELD
SRF GUN CAVITY
BOOSTER CAVITY
UHV
UHV
BPM
CATHODE STALK
FPC 50 KW
FPC 50 KW
FPC 50 KW
FPC 50 KW
TO 1.1 BAR
3" RETURN HEADER
FROM FPC INNER CONDUCTOR
TO COOLING WATER RETURN
FROM COOLING WATER SUPPLY
TO FPC INNER CONDUCTOR

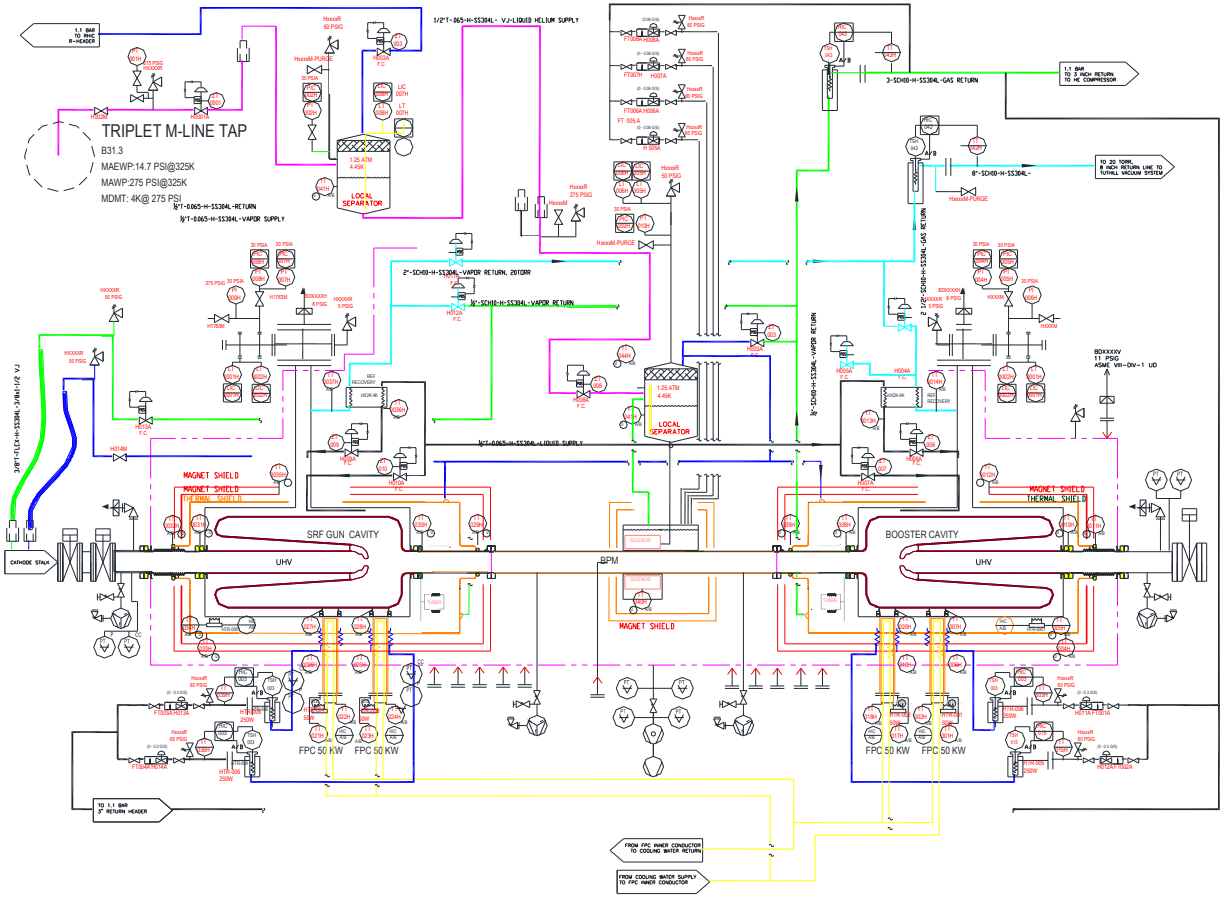
TRIPLET M-LINE TAP
B31.3
MAEWP:14.7 PSI@325K
MAWP:275 PSI@325K
MDMT: 4K@ 275 PSI
1.1 BAR TO RHC R-HEADER
1/2"T-065-H-SS304L- VJ-LIQUID HELIUM SUPPLY
3-SCH40-H-SS304L-GAS RETURN
TO 1.1 BAR TO 3 INCH RETURN TO HE COMPRESSOR
TO 20 TORR, 8 INCH RETURN LINE TO TUFHILL VACUUM SYSTEM
8"-SCH40-H-SS304L-
LOCAL SEPARATOR
1.25 ATM 4.45K
2"-SCH40-H-SS304L-VAPOR RETURN, 20TORR
2"-SCH40-H-SS304L-VAPOR RETURN
2 1/2"-SCH40-H-SS304L-GAS RETURN
8"-SCH40-H-SS304L-VAPOR RETURN
1/2"T-065-H-SS304L-LIQUID SUPPLY
BDXXXXV 11 PSIG ASME VH-DIV-1 U/D
MAGNET SHIELD
THERMAL SHIELD
SRF GUN CAVITY
BOOSTER CAVITY
UHV
BPM
CATHODE STALK
FPC 50 KW
TO 1.1 BAR 3" RETURN HEADER
FROM FPC INNER CONDUCTOR TO COOLING WATER RETURN
FROM COOLING WATER SUPPLY TO FPC INNER CONDUCTOR

WBS 11.0 Cryogenics System

- 11.1 **System Design**
- 11.2 **Cryogenic Equipment Subsystems**
- 11.2.1 Triplet M-Line Tap
- 11.2.2 4.5K VJ line to Cryostat valvebox
- 11.2.3 Valvebox for Cryostat
- 11.2.4 Warm Piping: 1 atm / 20Torr Lines
- 11.2.5 Recovery Heat Exchanger
- **11.3 Cryogenic Cryo Inst&Ctrls**
- 11.3.1 System Engineering & Management
- 11.3.2
- 11.3.3
- 11.3.4
- 11.3.5
- 11.3.6

WBS 3.0 SRF Cavities System

- 3.1 **System Design**
- 3.2 **C**
- 3.2.1
- 3.2.2
- 3.2.3
- 3.2.4
- 3.2.5

- ARGON NAT LAB
  - Gun Cavity
  - Booster Cavity
  - Helium vessel
  - HOM dampers
  - Tuners
  - SC SOLENOID +heliumvessel
  - + level probes

- BNL
  - FPC'S
  - Magnetic shields
  - Thermal shields
  - Space frame (s)
    - Thompson rails?
  - Pickups

SRF Cryostat vacuum vessel

- Diameter: 48 inch vessel
- ASME VIII U-stamped
- SS304
- MAWP: 50 psi@ 120F
- MAEWP: 14.7psi
- MDMT: 4.4K @ 50 psi
- 4 pair x for 48”vessel dia (60”) flanges access for assembly and repairs
- Split flanges beam lines ends

- Ports:
- Burst disk: 4” ANSI flanged -oring
- Relief: 1 x 2-3/4 CF.
- Instruments:
  - 16 x 2-3/4 CF.
- FPCs:
  - 4 x 8” nozzle
- Turbopump:
  - 1 X 6” NPS ANSI
- Ionpump UHV beamline Middle:
  - 2 x 6” NPS ANSI
- FPC cold helium intercept exit: 4 x 2-3/4 CF
- Tuner ports: 4 x 4.5” CF.
- 4 vapor cooled current leads feedthru’s for SC Solenoid

Cryo system level

- Need for additional RHIC interface separator: Leave as part of contingency.
- SC Solenoid helium volume use as 2nd phase separator, 1st phase separator will be RHIC interface separator with return R-line tap
- Separate 2K recovery exchanger for each cavity
- Separate fill and cooldown valves for each cavity
- Return valve(s)
  - Separate cryo return valve for each cavity
  - No cryo return valve, just one warm valve on return after heater
- Cross over valve to 4.5K return (1.1 bar return to heater and compressor)
- Cathode stalk and tip cooling loop from 4.5K boil off helium: stalk and tip: 50 W? RF losses and laser loads.