BROOKHAVEN NATIONAL LABORATORY

MEMORANDUM

TO: D. Beavis

FROM: J. Sandberg

SUBJECT: Modifications to the Iris Recognition System at 6 O'clock

DATE: October 12, 2007

Jonathan Reich has written a description of the system to be installed, which is attached to this document (Appendix 1). I have been asked to review this equipment and determine if it is appropriately designed for its intended use and if its construction is consistent with good engineering practice.

Observations:

1) An Iris scanning camera, communicating with a local controller, authenticates via a database persons to whom gate entry is permitted. Upon recognition of a valid Iris scan, a key will be released from a Keysafe 4000 key tree. Physically attached to the released key will be iClass Key smart token. This token will be read by a HID Edge ER40 reader. If it is a valid token a relay will close in the edge reader and upon simultaneous release from a MCR operator, gate access will be allowed. The Keysafe 4000 will supply key status data to the two PASS divisions.

2) This equipment is specifically made and marketed for access security systems. It is well made and of good quality.

3) Specific information concerning the failure modes of the equipment and its mean time to failure are not known. The equipment was specifically designed to prevent unauthorized entry into secure areas and therefore this function should be optimized, even during a fault.

4) The token is a passive device which is estimated to be good for 100,000 reads and is guaranteed for 10 years. All communications between the token and the reader are encrypted. The maximum read range for the token is less than 1.5 inches.

5) The Edge reader will be powered by its Ethernet connection.

6) The switches on the Keysafe4000, which monitor key position, are not redundant. One switch tells the PLC the status of the key and token and the PLC uses this information to tell the two PASS divisions the key status.

Conclusion:

The equipment is appropriate for its intended use. It is well made and of good quality. Its failure modes are not known but it is assumed, given the criticality of this function, that system faults would prevent access. The older system had independent redundant switches on the key position monitor while the new system does not.

Appendix 1

Iris system upgrades Description and tasks:
7/5/2007

See figure 1 for details. The entire Iris recognition system at RHIC and NSRL will be replaced. The new camera units ICAM4000 will be mounted next to the new KEYTRAK Keysafe 4000 units. The Keysafe4000 units will replace the existing Key tree units and mounted in same footprint for existing key trees and utilize existing conduit etc., in a serial fashion i.e., 6 O'clock shall be fully operational first then 8 O'clock etc. The ICAM4000 communicates with the ICU4300-W (Identity Controller), the system component assigned to one or more portals where authenticated persons access rights are securely retained and managed. The ICU also ensures that portal operation can continue if there is an interruption in communication with the host computer. Communication is via Ethernet. Upon recognition of a valid Iris the ICU4300-W will output a 26 bit Wiegand code via copper wire to the Cypress DPX-7200 Wiegand Ethernet extender
Central unit. The code will be transmitted via Ethernet to the Remote DPX-7200 unit.
The remote unit will then output wiegand code, which originated from the ICU-4300W to the KEYSAFE4000 via copper wire. The Keysafe will release a key if user wiegand code is valid. Attached via steel ring to the individual Keysafe keys will be a HID 205X iCLASS Key 13.56 MHz contact less smart key(Token). The Token will be carried by the user to the Entry gate which will be equipped to read the HID 205X. The reader will be a HID EDGE ER40. The output contact for the reader will be connected to the PASS system via copper wire to allow a controlled access mode simultaneous release of the gate. The Keysafe4000 will output a key tree complete signal to the PASS divisions A and B via copper wire for use by the PLC's to determine appropriate logic functions.
The ER40 reader will communicate and be power by the 802.3af standard(power and data over Ethernet) This will be provided by Powersense AX-8351 units which will be mounted in the PLC Enclosure A or B Divs. depending on space availability.

Tasks:

1. Understand all devices and document briefly what their function is and what we use them for.
2. Make accurate diagram of new system.
3. Modify (issue ECN) for pertinent drawing to be changed to accept new inputs from new device.
4. Write up a description of how the new system operates. Does not have to be super detailed but should be very information to someone reading it for the first time to understand how the system functions.
5. Created tables for each device with all required inputs and outputs mapped with appropriate codes. Wiegand, card numbers, user ID numbers etc.
6. Program description for each device that requires programming. What should it do?
7. Program devices. Arrange for backing up of data from various sources in the system.
8. Acquire enclosures for equipment. Arrange for installation of equipment.
9. Test system.
10. Inform Weng Fu about changes required for Operator Iris Log interface app.
11. Inform C-AD Safety (ESH) about new changes and required procedural changes.

12. Inform MCR about changes.
13. Roll-Out system.

Qty	Part#	Description
1	ICAM4100	Enrollment camera
7	ICAM4000	Keytree cameras
2	ICU-4300W	Iris control unit
8	DPX-7200	Wiegand ethernet converter
7	4000 series	Key tree
10	ER40	HID EDGE reader/controller
7	AX-8351	Powersense POE Hub
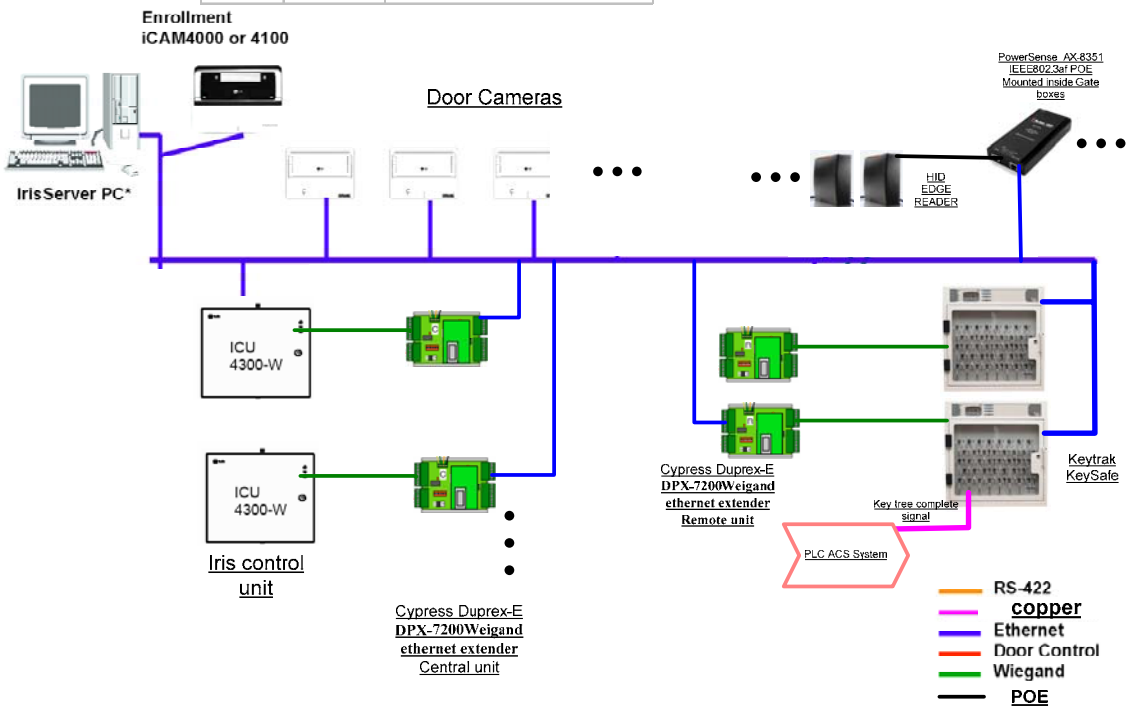
Iris system
upgrade
06/18/2007
J. Reich