sPHENIX

ESRC/ASSRC REVIEW

DEC 8 2015

SOLENOID LOW POWER COLD TEST

BLDG 912

ON GOING WORK

- LESHC REVIEW MAY 22 2015, LESHC –PCSS 15-05
- ATS ITEMS
- Cryogenic lines fields joints to be done after ERL SRFGun testing is complete.
- Warm Piping install in process
- Wiring install be continued after cable tray is installed
- Valvebox closing in process
- Turbo pump install in process
- Voltage taps wiring and DAQ system in process
- Power supply connections

LESHC ATS ITEMS	
8498.1.1 - LESHC 15-05 Review the sPHENIX Magnet (Testing) Action Item 1: Calculate temperature profile Calculate the temperature profile during a magnet quench	*Open*
8498.1.2 - LESHC 15-05 Review the sPHENIX Magnet (Testing) Action Item 2:Verify certs exist for Phase Separator Verify that material certifications, weld inspection reports, welder certification and procedures exist for the Phase Separator	*Closed*
8498.1.3 - LESHC 15-05 Review the sPHENIX Magnet (Testing) Action Item 3: Verify Design Calcs are correct Verify through independent calculations that the Phase Separator Design Calculations are correct	*Closed*
8498.1.4 - LESHC 15-05 Review the sPHENIX Magnet (Testing) Action Item 4: Ensure docs in Windchill Ensure that all drawings and documentation for the BaBar Coil will go into the CA Windchill Document Control system	*Closed*
8498.1.5 - LESHC 15-05 Review the sPHENIX Magnet (Testing) Action Item 5: Verify Pressure Relief Device perform Verify through calculation that if an internal cryogenic pipe breaks in the cryostat, the Pressure Relief Device is capable of keeping the internal pressure of the cryostat to less than 15 psig	*Closed*
8498.1.6 - LESHC 15-05 Review the sPHENIX Magnet (Testing) Action Item 6: Verify vessel won't Verify through calculation that if there is an arc-over in the lead-pot vessel so the vessel will not become over-pressurized. Determine how much energy can be dumped into the vessel.	*Open*
8498.1.7 - LESHC 15-05 Review the sPHENIX Magnet (Testing) Action Item 7: Ensure carbon steel anchored properly Ensure that anything that is made up of carbon steel and is placed within the 5 Gauss line will be anchored properly	*Open*
8498.1.8 - LESHC 15-05 Review the sPHENIX Magnet (Testing) Action Item 8: Develop Green Sheet Develop a procedure for Equipment Hook-Up (Green Sheet).	*Open*
8498.1.9 - LESHC 15-05 Review the sPHENIX Magnet (Testing) Action Item 9: Provide OP for new LN2 system Provide an Operating Procedure for the new LN2 system that will be connected to the ERL Cryogenic system.	*Open*
8498.1.10 - LESHC 15-05 Review the sPHENIX Magnet (Testing) Action Item 10: Verify ODH system functional Verify that the existing ODH Safety system is fully functional prior to the start of the sPHENIX magnet test (ERL system).	*Open*
8498.1.11 - LESHC 15-05 Review the sPHENIX Magnet (Testing) Action Item 11: Have ESR/ASSRC reviews Contact the chairperson of the Experimental Safety Review Committee and the chair of the Accelerator Systems Safety Review Committee and set up a review and/or walk down of the test area prior to turn-on	*Open*
8498.1.12 - LESHC 15-05 Review the sPHENIX Magnet (Testing) Action Item 12: Perform Magnet Safety Review Contact Lou Snydstrup and perform a Magnet Safety Review prior to magnet turn-on	*Open*
8498.1.13 - LESHC 15-05 Review the sPHENIX Magnet (Testing) Action Item 13: Verify piping installed Verify that all newly installed cryogenic piping has been installed correctly and as per design drawings. Ensure the new piping is pressure tested.	*Open*

CAUTION
CRYOGENS IN USE

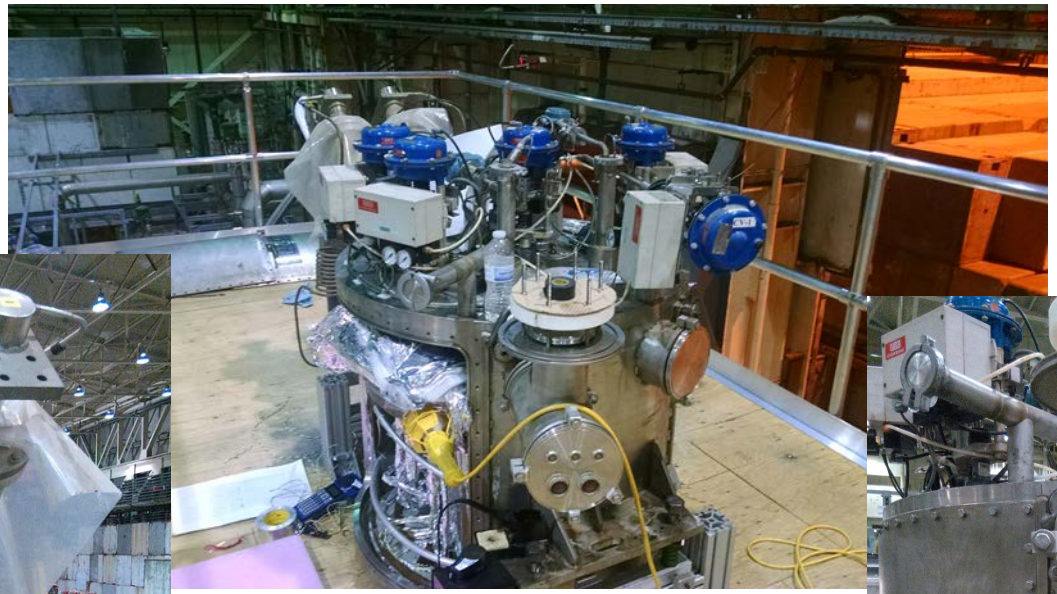

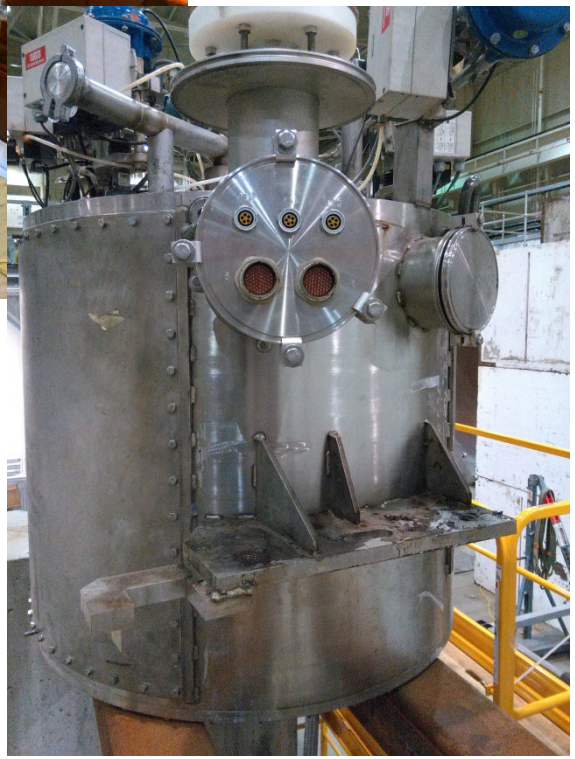

SCHEDULE

- Complete valvebox closure
- Complete cable tray
- Complete wiring
- Complete Cryo warm piping
- ERL plant shutdown, after Dec 18
- Complete Cryo cold piping, Week of Jan 4-8
- Final walkthru
- Cooldown
- Low power test

SLIDES FROM LESHC –PCSS REVIEW

AGENDA

- A: SOLENOID History and Design
  - Cryostat assembly --
  - Coil Design
  - Coil tie-rods support system
  - Coil Cooling circuit
  - Thermal shield circuit
  - Valvebox and chimney
- B: SOLENOID Documentation
  - Engineering and QA DOCS from ANSALDO
  - Structural calcs
  - Relief Calcs
- C: Solenoid location and assembly work in Bldg 912
- D: Cryogenic system to cool solenoid
  - LN2 helium gas cooler, 300K to 90K
  - ERL plant: Tie ins to ERL cryogenic system
    - ERL Cryogenic systems mods and interface to solenoid
    - P&ID's
  - Controls
- E: Low current <100A test at 4.5K
  - POWER SUPPLY, etc
  - Measurement and instrumentation
  - Cryogenics cooldown and 4.5K test
  - Cold Test Plan

A: SOLENOID History and Design

SLAC: BaBar Solenoid/valvebox screen

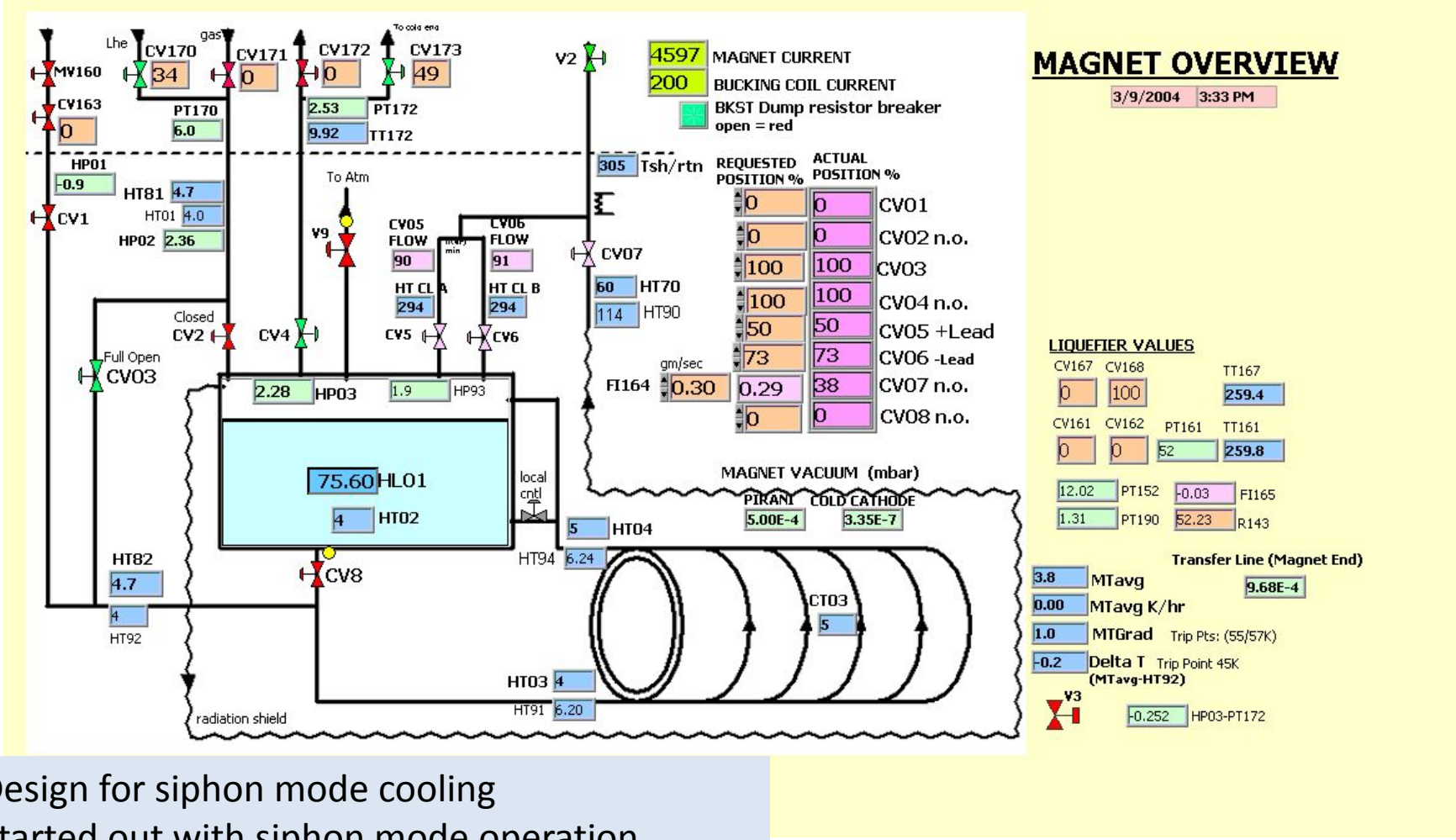

Design for siphon mode cooling
Started out with siphon mode operation
Stayed with forced flow mode

B: Engineering and QA DOCS from ANSALDO

HELIUM VOLUME RELIEFING SYSTEM

CALCULATIONS	Load	Results		Setpoint
Fire CGA S-1.3 §5.3.5	16 kW	420 SCFM Air equivalent		6 bara
Loss of vacuum due to helium leak CGA S-1.3 §4.9.1.1		9.7 SCFM Air equivalent		6 bara
Loss of vacuum to air. Lehmann and Zahn	50 kW	1339 SCFM Air equivalent		6 bara

- cryogenic quench dump valve, CV9
- Burst disk FIKE 1.5” (DN40)
  - MNFA: 1.44 in2
  - CAPACITY: 56,000 W @ 6 bara (88 psia), 7.6K
- Relief Valve [Purchase new one]
  - J orifice, 1604 SCFM AIR@15C @ 4.4 barg (79 psia)
  - CAPACITY: 63,000 W @ 4.4 barg (79 psia), 7.3K

B: Engineering and QA DOCS from ANSALDO

RELIEF CRYOSTAT INSULATING VACUUM VOLUME

Lift Plate spring loaded 100 mm diameter

INSULATING VACUUM, SOLENOID CRYOSTAT +CHIMNEY + VALVEBOX

Standard	Water Volume L	Flow Area mm^2	Lift Plate/ Nozzle Size	Setpoint	Heat Load
CGA 341 §6.4.2	11575	3935	DN 100 7800 mm^2	1.6 bara	125 kW @15 psig

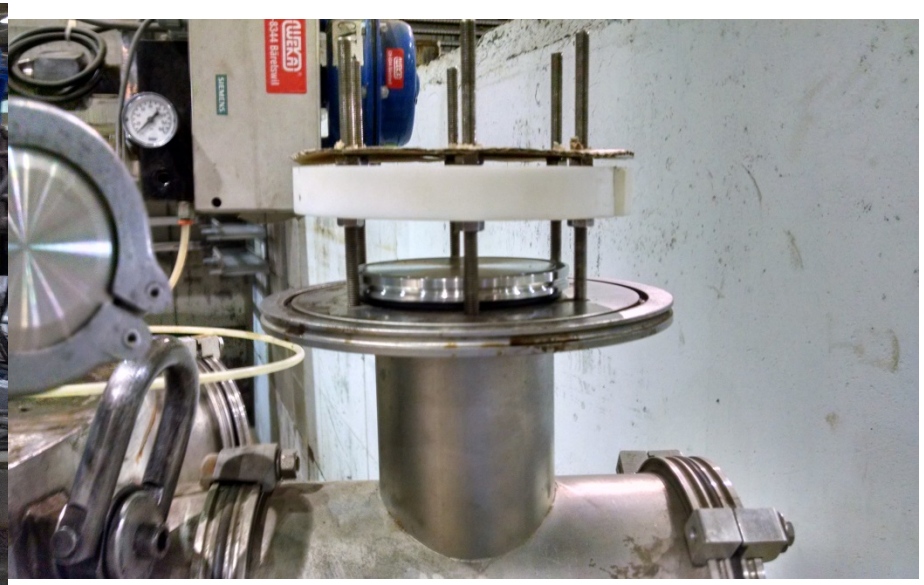

C: Solenoid location & assembly Bldg912

VALVEBOX/CHIMNEY SUPPORT STRUCTURE

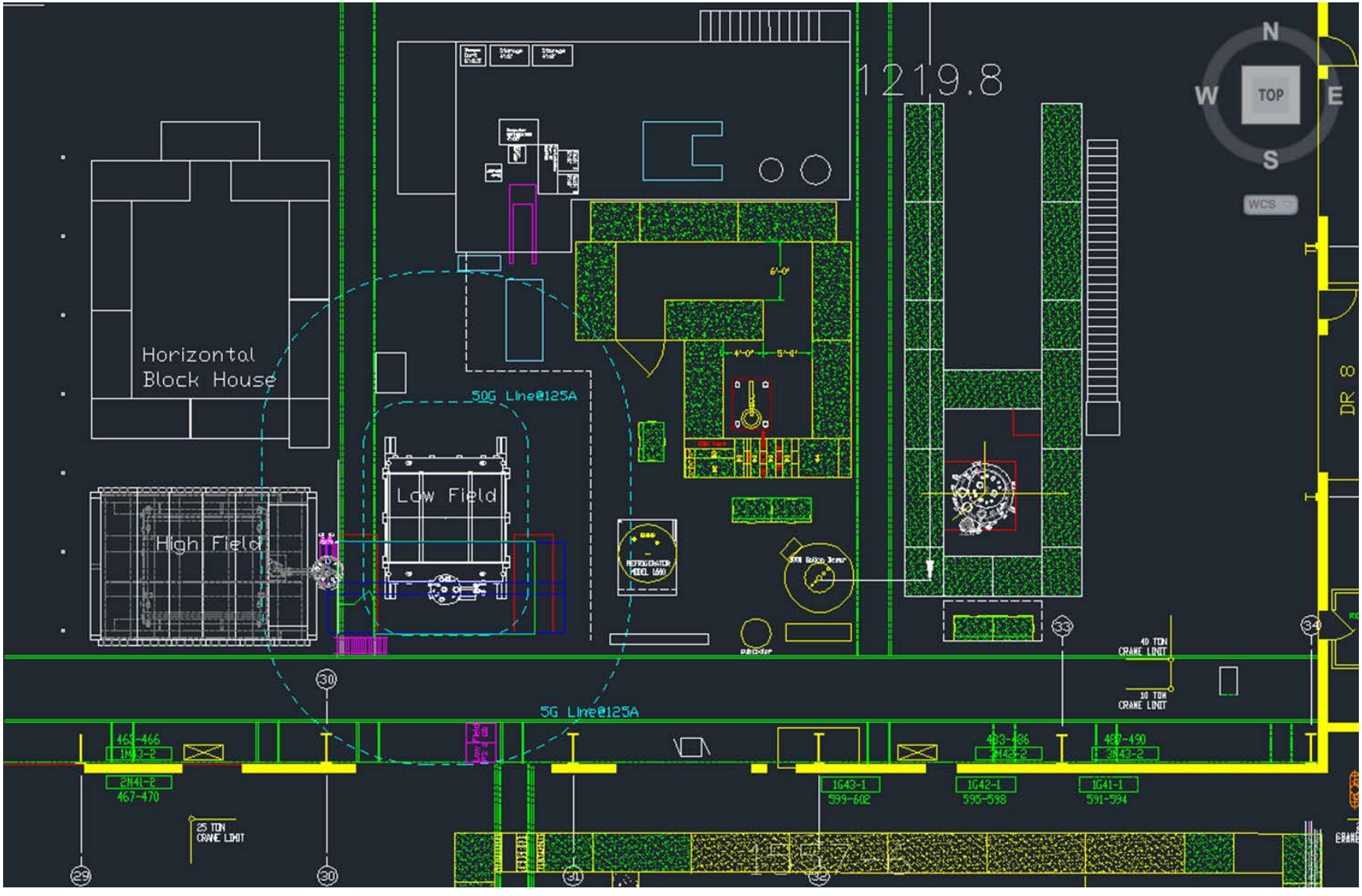

C: Solenoid location & assembly Bldg912

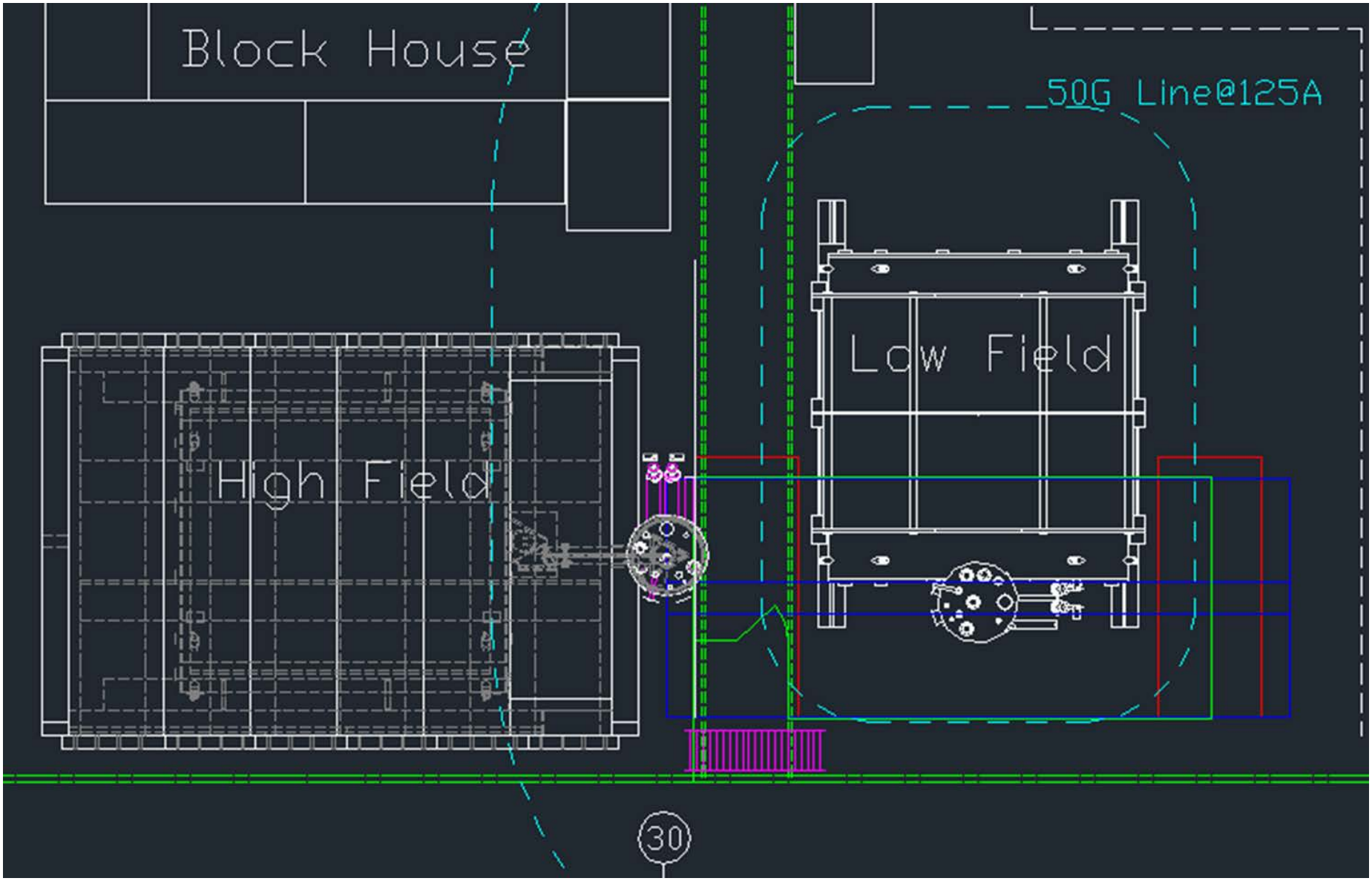

C: Solenoid location & assembly Bldg912

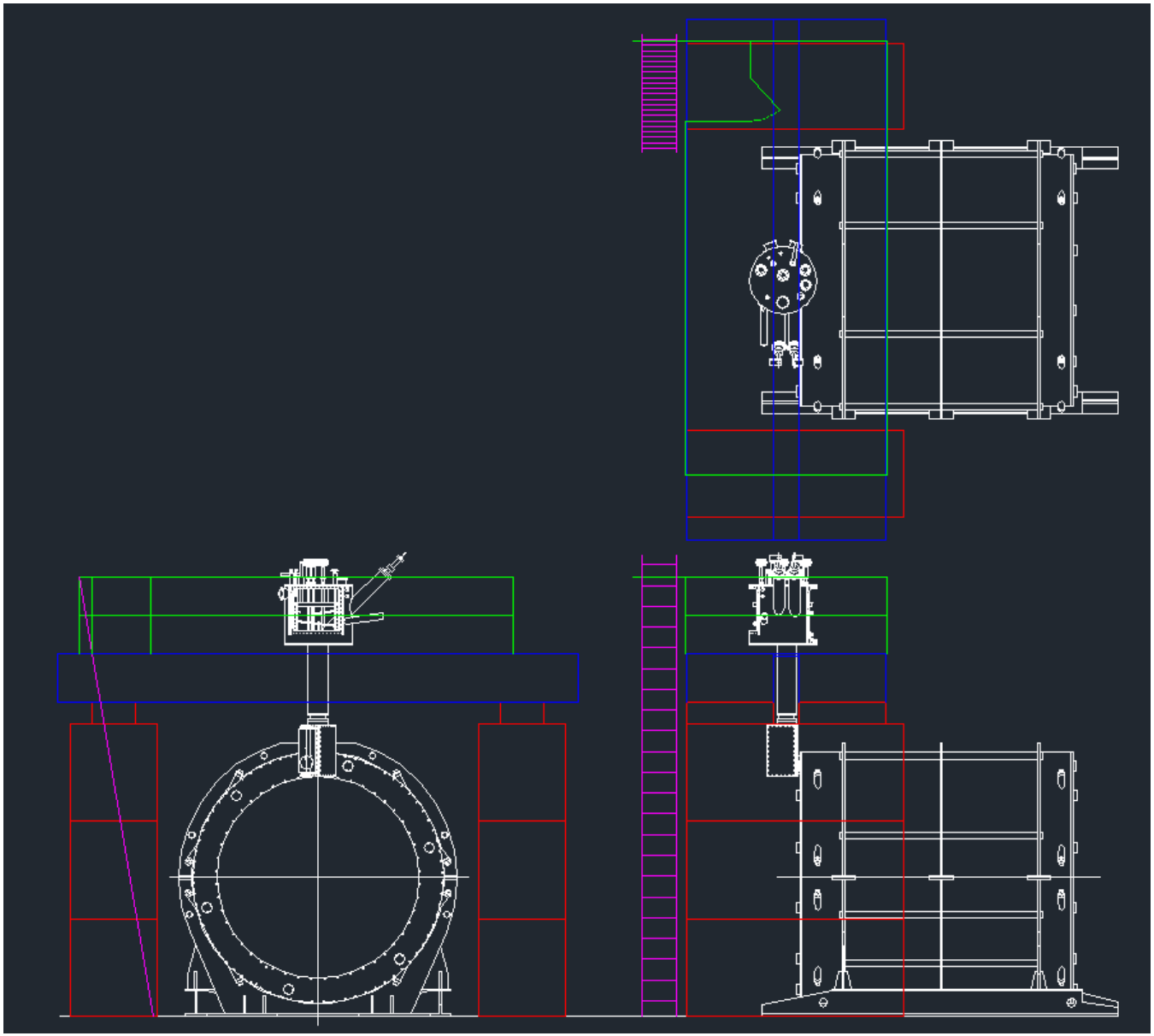

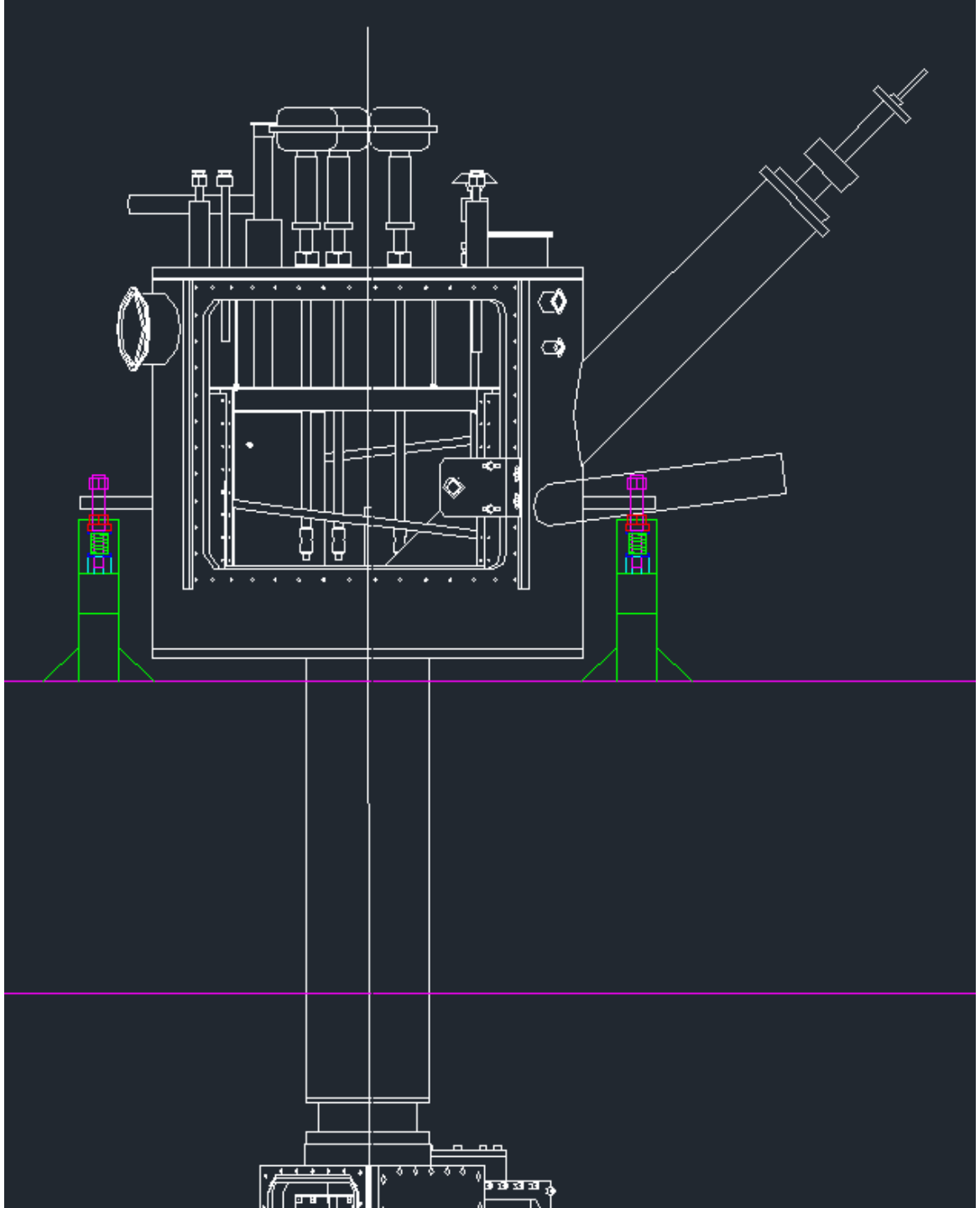

C: Solenoid location & assembly Bldg912

C: Solenoid location & assembly Bldg912

ODH

LIQUID HELIUM INVENTORY IS LESS 100 LITERS

ERL CRYOGENIC SYSTEM DICTATES HELIUM INVENTORY

LN2 SUPPLY TO LN2 HELIUM COOLER WILL BE
FROM 11,000 GALLONS STORAGE DEWAR

N2 BOIL-OFF VAPOR FROM LN2 HELIUM COOLER
WILL BE PIPED TO OUTSIDE OF BUILDING

D: Cryogenic system to cool solenoid Taps to VTF side

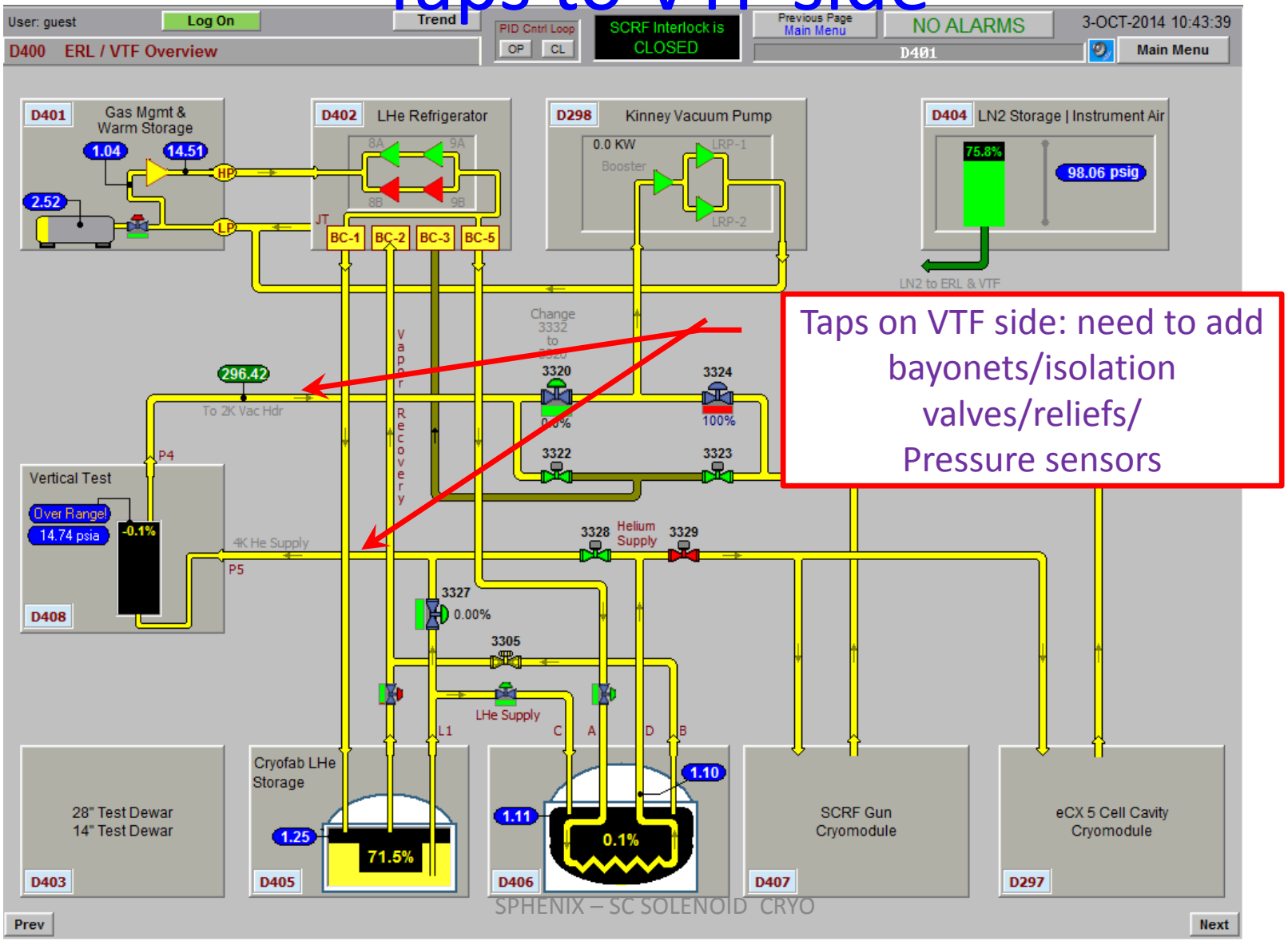

Taps on VTF side: need to add bayonets/isolation valves/reliefs/ Pressure sensors

D: Cryogenic system to cool solenoid

Taps to VTF side & LN2 bayonet

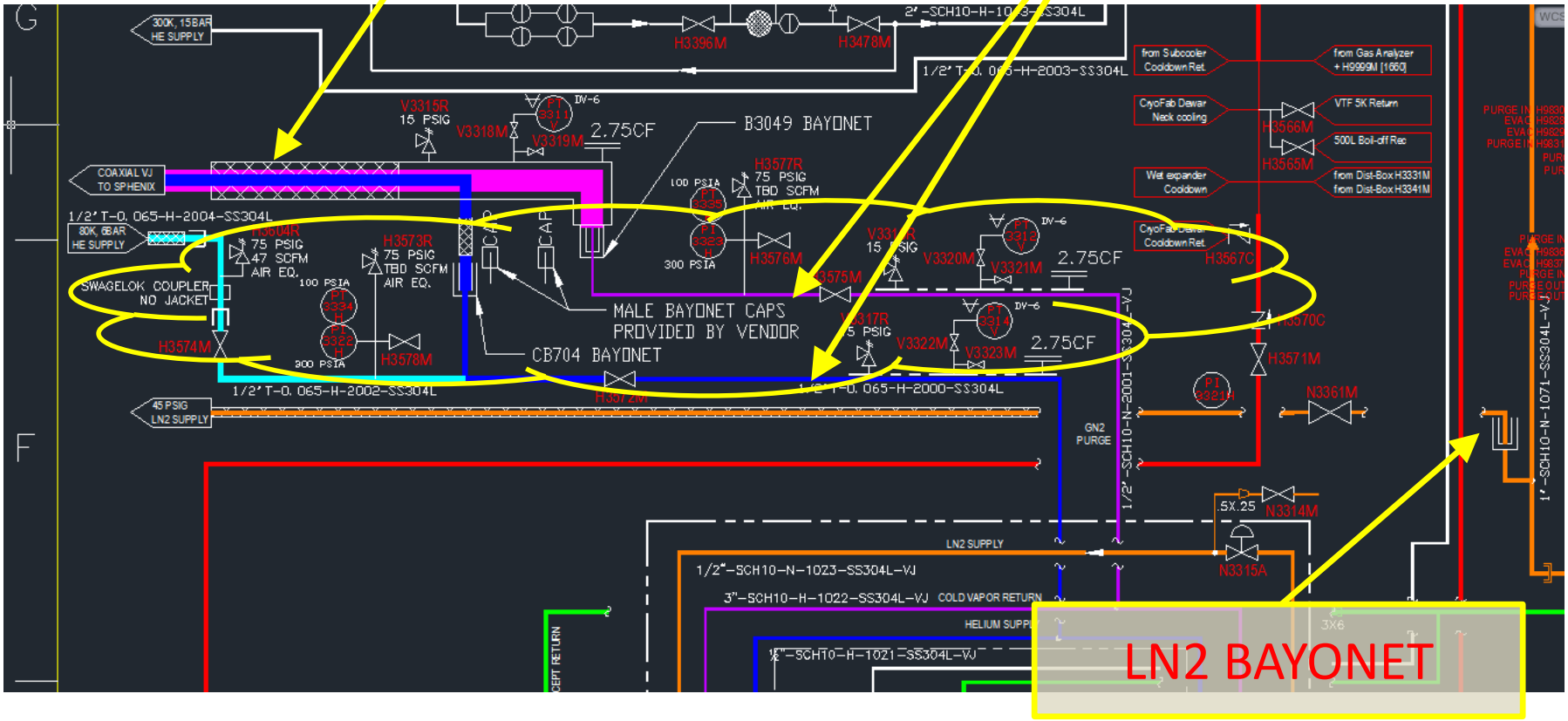

D: Cryogenic system to cool solenoid

Solenoid Valvebox P&ID with LN2 Cooler

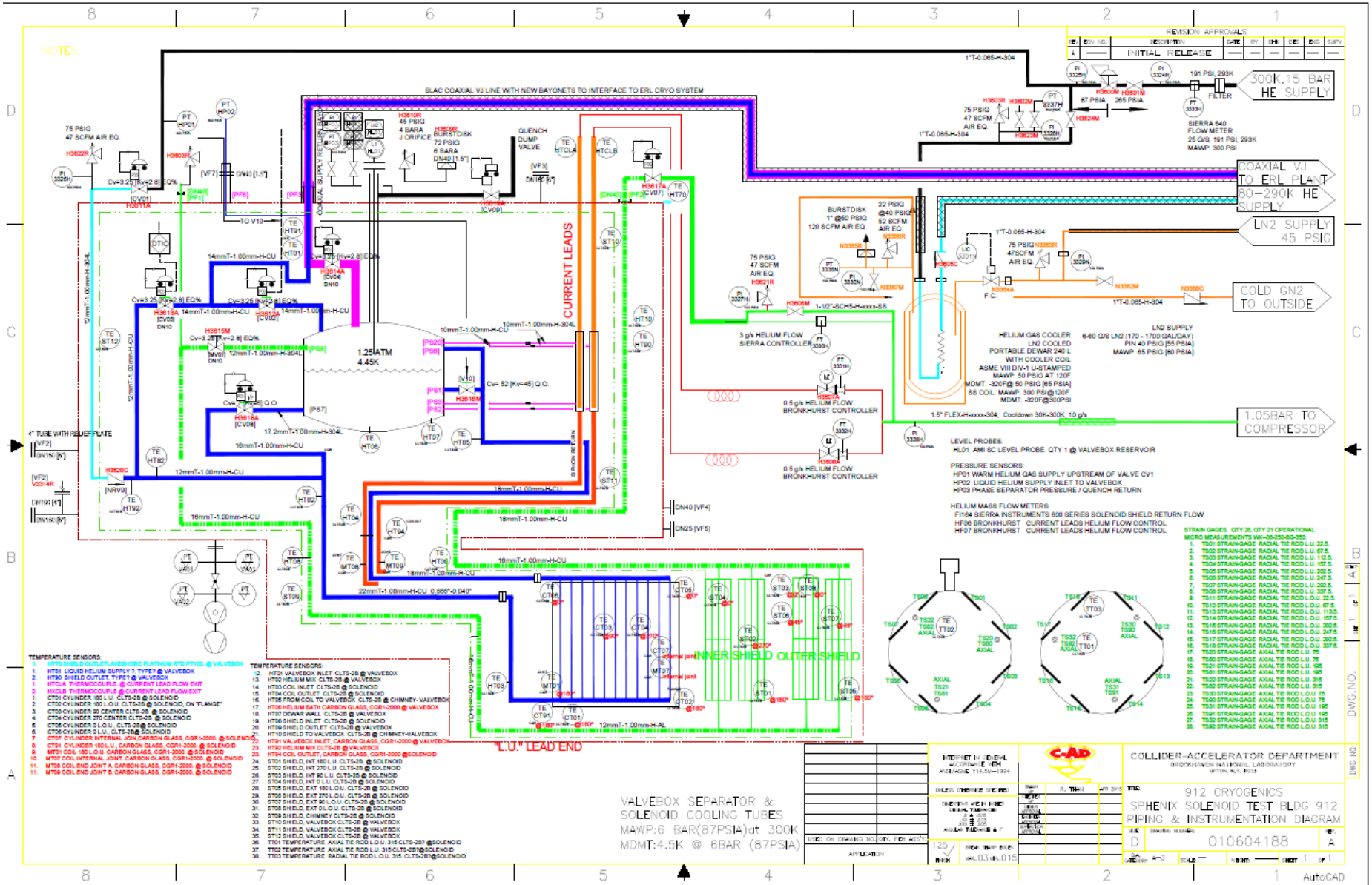

D: Cryogenic system to cool solenoid Circuits

- ERL cryogenic system: Vertical Test Facility Side Taps
  - Liquid helium supply
    - Add tap: manual isolation valve and ½" bayonet, Relief
    - Tee-in for the 80K helium gas supply from LN2 GHe Cooler
  - Cold vapor return
    - Add tap: manual isolation valve and ½" bayonet, Relief
- Co-Axial Line to Solenoid Valvebox
  - Shortened and modified to interface to ERL CRYO
  - Liquid Supply and Vapor return
- Warm gas supplies from ERL compressor
    - #1 Warm gas line to LN2 Gaseous helium Cooler coil loop inlet
    - #2 Warm gas line to valvebox warm mixing valve, CV01
- Shield / lead cooling return
  - Braided Flex line and tubing, warm line.
  - Returns to ERL compressor suction line
- VJ flex helium line from GHe Cooler LN2 Dewar to tee-in at interface of liquid helium supply for Coax VJ line
- LN2 Supply Line to GHe Cooler LN2 Dewar bath
- Vent line for N2 boil-off to outside of building
- Need to change out reliefs on VTF volume to 15 psig from 8/5 psig

D: Cryogenic system to cool solenoid

Circuits / Vessels

Description	MAWP	Status
Solenoid shield, mandrel tubing, internal piping Valvebox/separator/lead pots	73 psig, 6 bara	Pressure tested & Leaked Ckd. Pending Pres & Leal test
LN2 Gas Helium Cooler Coil / LN2 Bath	300 psig / 50 psig	New
ERL VJ TAP: Liquid supply line	100 psig	New
ERL VJ TAP: Vapor Return	15 psig	New
Coax VJ: ERL Tap LHe supply to S-Valvebox	73 psig, 6 bara	Pending Pres & Leal test
Coax VJ: S-Valvebox GHe return to ERL tap	73 psig, 6 bara	Pending Pres & Leal test
VJ: LN2 Ghe Cooler supply to Coax LHe supply@ ERL tap		New
Warm line supply: ERL warm HP GHe supply to PRV PRV to S-valvebox CV01	 300 psig 75 psig	New
Warm line supply: ERL warm HP GHe supply to PRV PRV to LN2 GHe Cooler	 300 psig 75 psig	New
S-valvebox to CV7/ Shield Return to ERL Low side	75 psig	Existing / New

D: Cryogenic system to cool solenoid 240 LN2 DEWAR GHe Cooler

- 240 Liter LN2 dewar with SS304L coil
  - Cools helium gas from 300K to 85K.
- Model CLPB240-GC Gaseous Helium Chiller Dewar
- Volume: 240 liters, net
- Dimensions: 24” o.d. x 59” height
- Design Pressure, LN2 Bath: 65 psia (MAWP is 50 psig)
- Design Specification. LN2 Bath (Inner Vessel): ASME U stamp
- Ghe Coil size: 1/2” o.d. tube x 50 ft length rolled to 20” diameter, ss304L
- Design pressure of coil: 300 psig
- Coil Inlet & Outlet connection: 1/2” Swagelok fitting located at top
- LN2 Fill port: CGA295 fitting with optional ½” npt solenoid valve (non vacuum jacketed)
- Vent port (LN2 bath): 1” Swagelok fitting (no shutoff valve supplied)
- Relief devices (LN2 Bath): 22 psig relief valve & 50 psig burst disc to comply with ASME Sec VIII, Div. 1 requirements
- Material of Construction: Stainless steel
- Base: Four 4” diameter casters
- Documentation supplied: U-1A form, ASME calculations, MTRs of inner vessel and coil, Pressure test certificate for coil assembly, Relief valve sizing calculation and Jacket relief size calculation

D: Cryogenic system to cool solenoid

- CONTROL LOGIC
  - DTIC loop:
    - Cooldown down gradient control TE-HT10 – TE-HT82
    - Mixing of warm gas with cold gas

      valve H3611A + H3613A
  - PIC loops, parallel pressure control loops

  on supply valves: H3613A, H3612A, H3611A
  - LIC loop: Liquid Level Control Fill valve H3612A
  - FIC loop: Shield Flow Control H3617A
  - LC: Independent local control liquid level in 240L LN2 dewar bath.
  - Alarms: High pressure in helium loop valvebox/coil

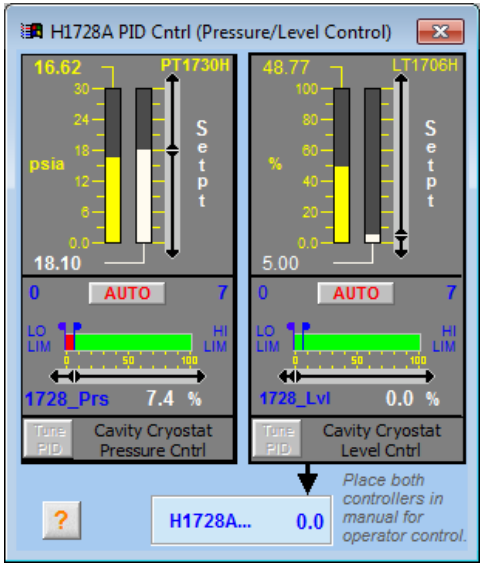

E: Low current <125A test at 4.5K

- Location 912, between cryo plant and (56MHz) test blockhouse
- Test Current: <125A
- No Quench protection
- Cooling by ERL cryoplant, 80K- 4.5K
- LN2 Precool with helium flow loop, 300K-80K
- Siphon Mode Operation
- Forced Flow Operation

E: Low current <125A test at 4.5K

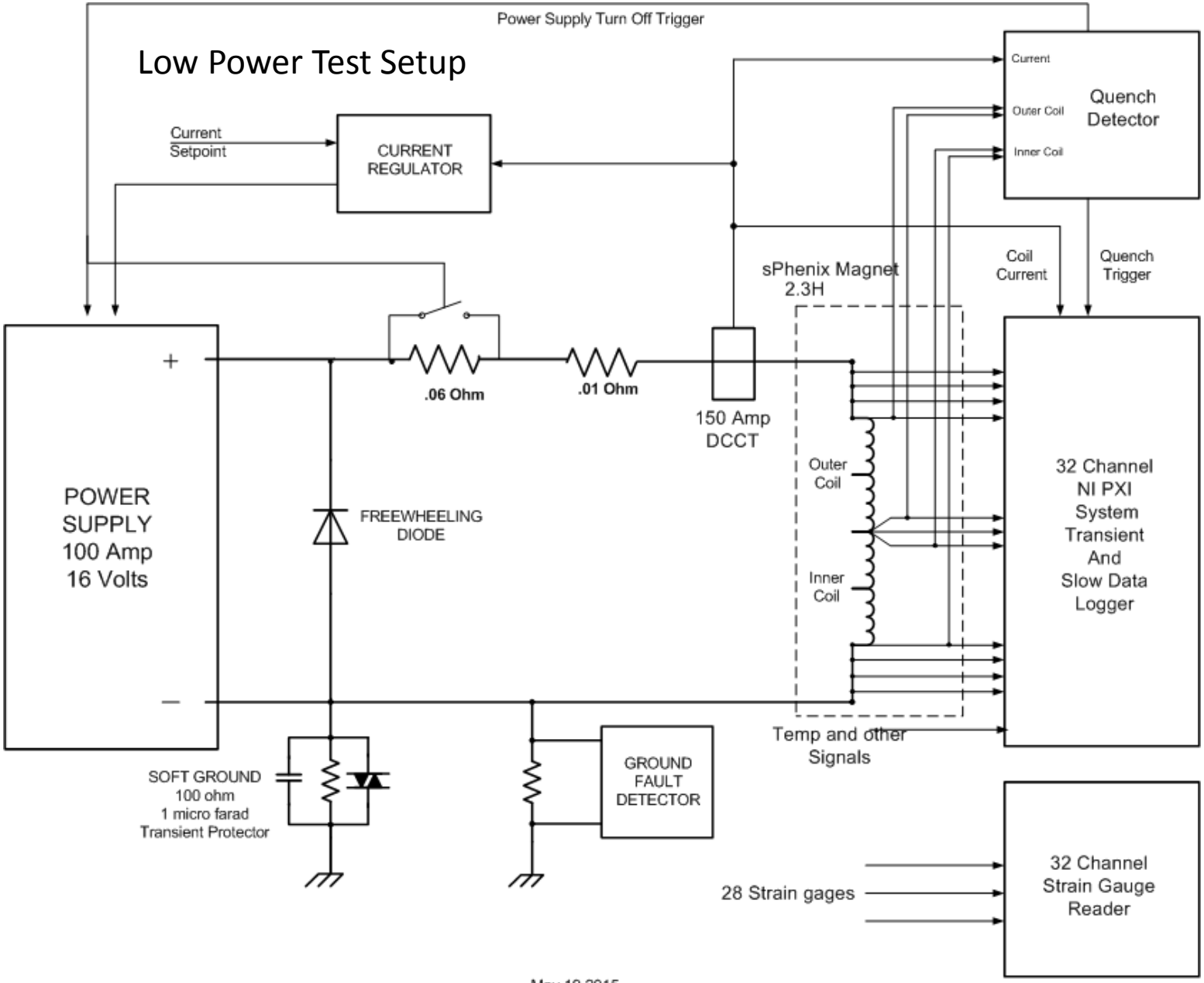

E: Low current <125A test at 4.5K

Test Setup Components

100A, 16V PS

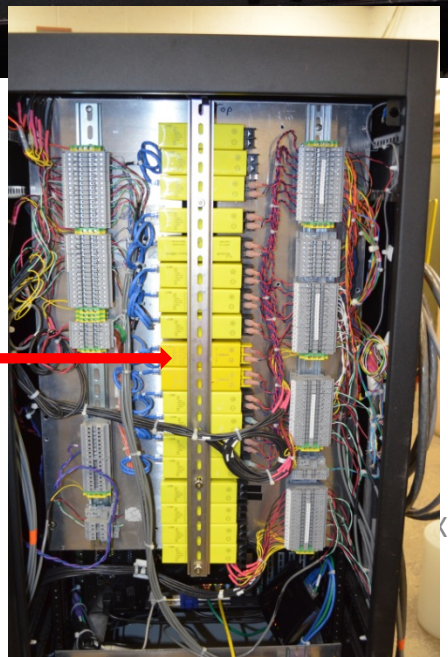

Isolators

Quench Detector

Slow Data Logger

Fast Data Logger

E: Low current <125A test at 4.5K

LabView based program to control power supply and capture data

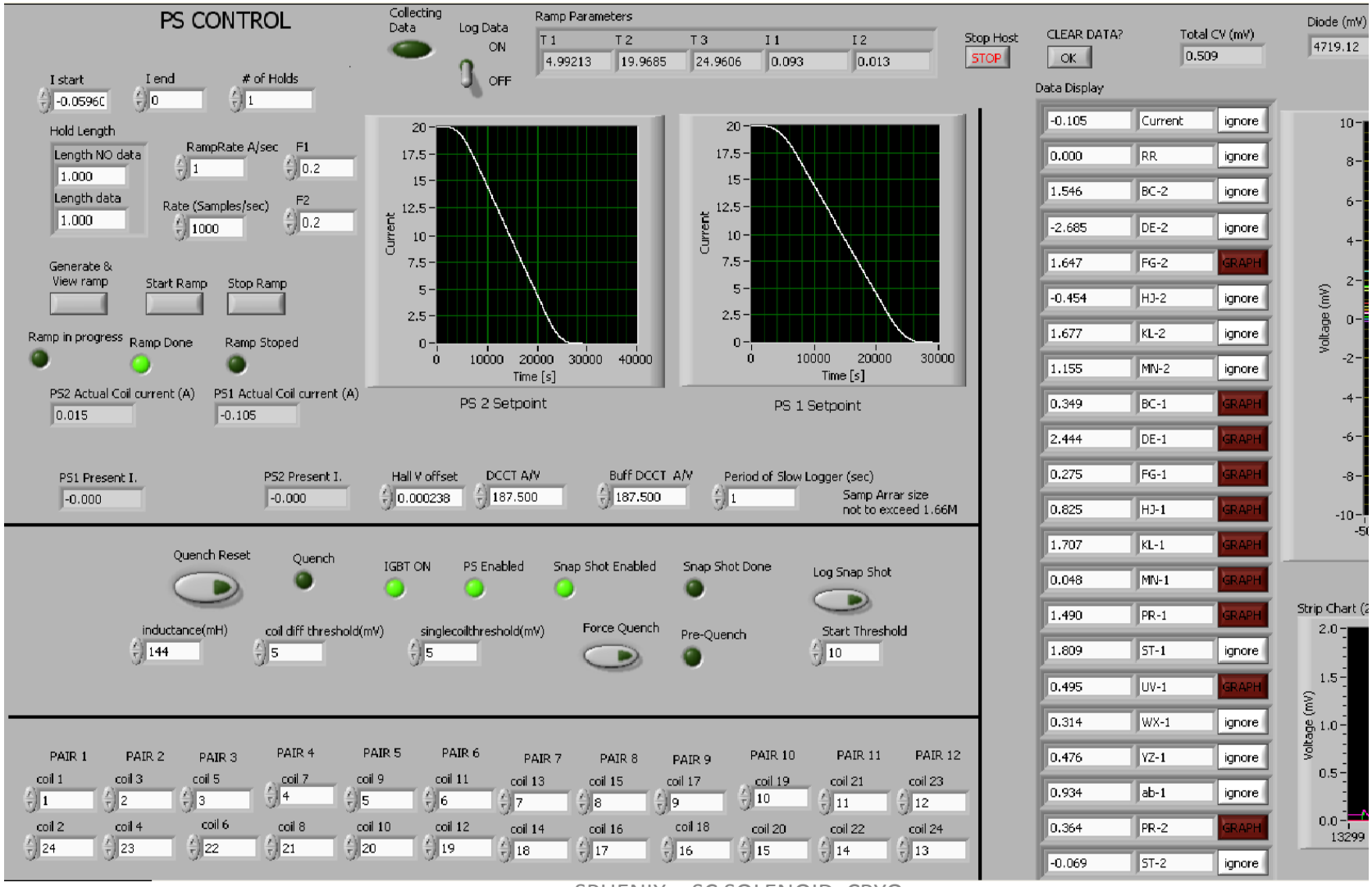

E: Low current <125A test at 4.5K Field Map at 100A

5 Gauss Line at 6.6 meter
Center Field 271 Gauss
Peak Field 320 Gauss
@Coil edge

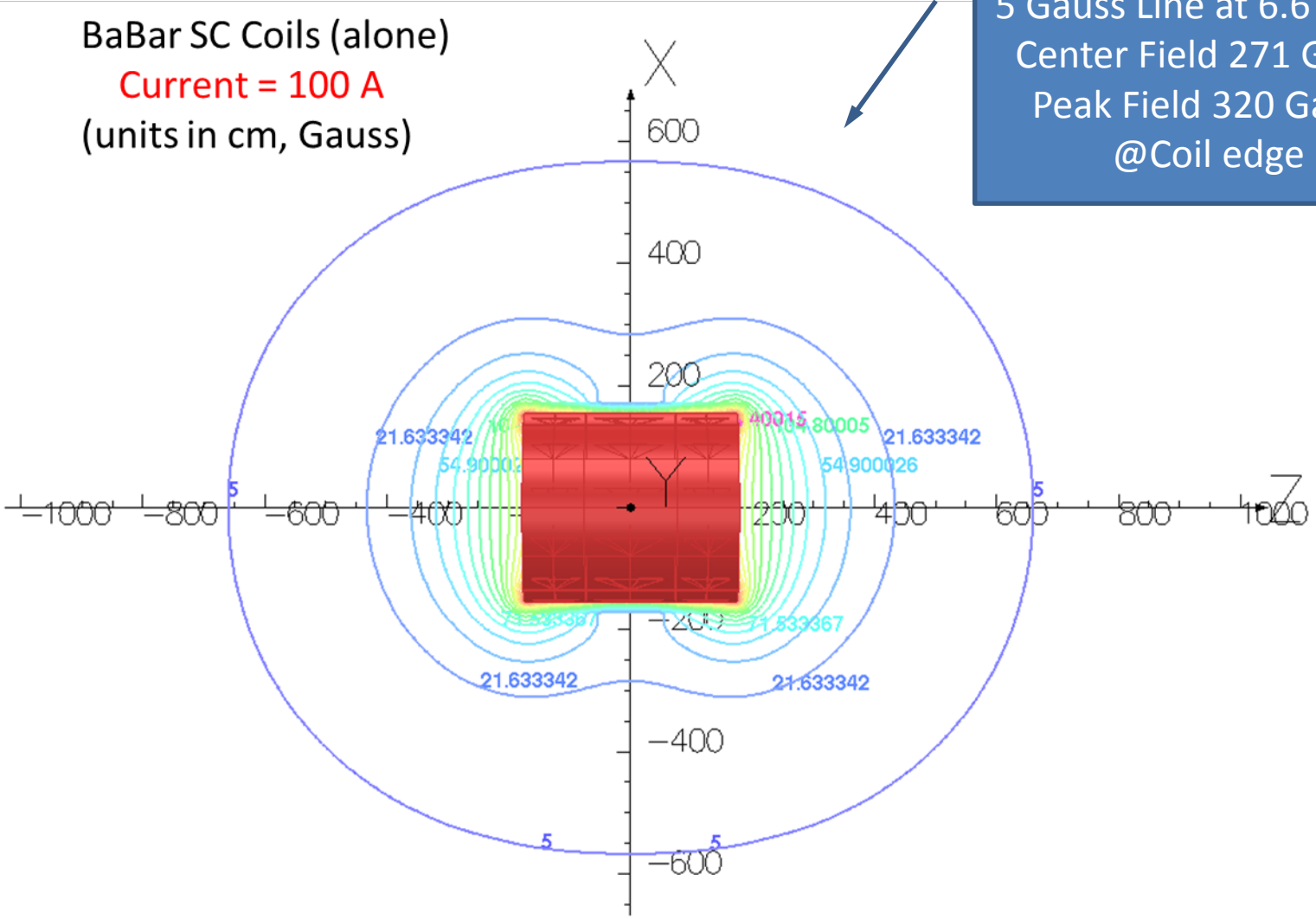

Map contours: B

5.000000E+00 to 3.210335E+02

E: Low current <125A test at 4.5K
Field Map at 125A

BaBar SC Coils (alone)

Current = 125 A

(units in cm, Gauss)

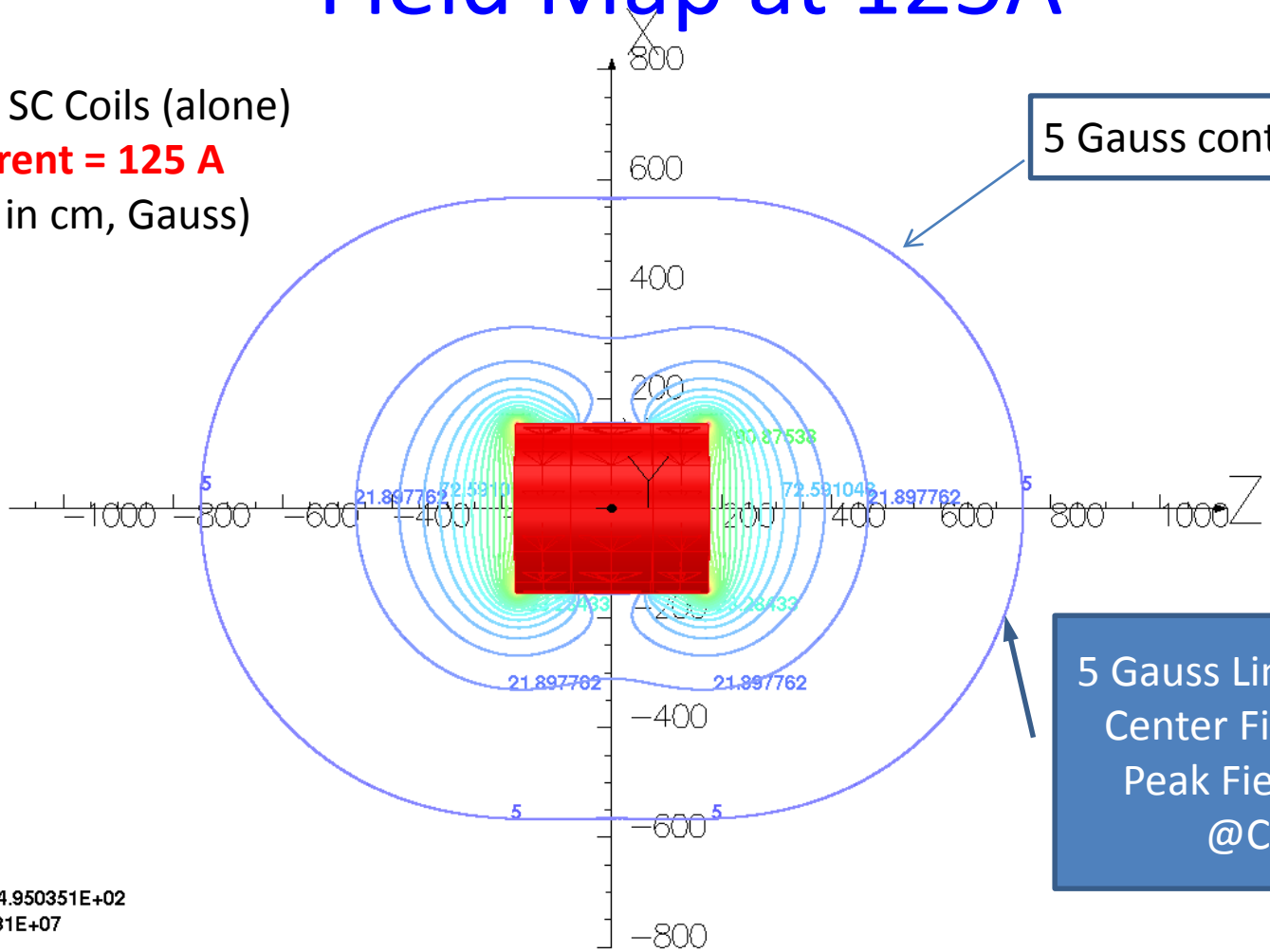

5 Gauss contour

5 Gauss Line at 7.5 meter
Center Field xxx Gauss
Peak Field xxx Gauss
@Coil edge

Map contours: B
5.000000E+00 to 4.950351E+02
Integral = 7.749331E+07

E: Low current <125A test at 4.5K Solenoid Cold Test Summary

- **A. Electrical Checkout at Room Temperature**
- 1. Measure lead resistances to ground with meter.
- 2. Hipot to ground at 520 V of magnet leads.
- 3. Impulse test at 400 V of separate layers and full coil.
- 4. DC voltage series resistance measurements at 1 A.
- 5. 1 A level shift test to check data acquisition system.
- 6. Connect magnet to power supply.
- 7. Ramp magnet to 2 A (or more if possible - TBD) at 0.1 A/s and measure magnet total
- voltage and inner and outer layer voltages in order to determine the inductances.
- 8. Checkout of Quench Detector (QD) - validate stop signal
- a. Half Coil Difference (Δ)– inner and outer layer voltage difference
- difference;
- b. Current Derivative (I_{dot})– total coil voltage and L(dI/dt) difference
- 9. Vacuum leak check of cryostat.
- 10. Set slow logger for 1 min intervals - monitor LHe level, temperatures, and strains.
- 11. Notify cryogenics personnel to start cooldown.
-
- **B. Cooldown**
  - Cooldown from 300K to 90K
    - Temperature gradient controlled at 20K [40K limit]
  - Cooldown from 90K to 4.5K
    - 10% left in thermal contraction.
    - Supply 5K directly
-

C. Electrical Checkout at 4.5 K

1. Measure lead resistances to ground with meter.
2. Hipot to ground at 520 V of magnet leads.
3. AC voltage tap measurements at 1 A.
4. Impulse test at 400 V of separate layers and full coil.
5. Connect magnet to power supply. Use inductance result of Part A.7 as starting point for power supply regulation.
6. Set fast data logger at 1 kHz sampling rate (1 ms intervals). Slow data logger at 1 s intervals. Monitor LHe level, temperatures, strains, and voltages of magnet, coils, SC leads, and gas-cooled leads. Adjust lead flow if necessary.
7. Ramp to 10 A at 1 A/s. Determine the total, inner, and outer inductances and adjust I_{dot} QD and Delta QD as necessary to balance for the difference in the inner and outer layer inductances ; determine the I_{dot} QD voltage threshold. Adjust lead flow if necessary.
8. Ramp to 25 A at 1 A/s. Verify results from C.7. Shut off power supply (manual QD trip) and analyze voltage tap data signals for proper operation of instrumentation and hardware. Adjust lead flow if necessary.
9. Repeat C.8 at 50 A. Adjust lead flow if necessary.

E: Low current <125A test at 4.5K Solenoid Cold Test Summary

D. Ramp Testing

Set Delta QD at 50 mV. Set I_{dot} QD at pre-determined threshold.
Fast data at 1 KHz. Slow logger at 1 s. 1 A/s ramp rate.

1. Ramp to 100 A at 1A/s. Verify inductances. Monitor leads and adjust flow if necessary. Shut off power supply. Analyze voltage tap data signals.
2. 5 power cycles from 0 A to 100 A at 1 A/s.
3. 1 hour at 100 A. Monitor leads and coil voltages.
4. If no QD trip occurs, warm up magnet to room temperature.
5. If QD trip occurs, analyze voltage tap signals to determine nature of trigger event. If signals show no anomalies, repeat ramp test to 100 A.
6. When tests have been completed, set slow logger to 1 min. Monitor LHe level, temperatures, and strains.
7. Notify cryogenics personnel to start warmup to room temperature.

E. Warmup to Room Temperature

Monitor LHe level, temperatures, and strains. Slow logger at 1 min.

EXTRA MATERIAL

- ADDITIONAL SLIDES

B: SOLENOID Documentation
Engineering and QA DOCS from ANSALDO

- ENGINEERING STRUCTURAL PRESSURE VESSEL
  - Magnet Calcs
    - Stress analysis Ansaldo
    - Stress analysis SLAC
    - Quench Heating Analysis
    - Seismic Analysis
  - Cryostat Vacuum vessel Engineering Calcs
  - Valvebox Vacuum Vessel Engineering Calcs
    - Phase separator Engineering calcs
    - Current Lead Pot Engineering calcs
    - 6000 A Current Lead pot engineering calcs
- RELIEFS CALCS
  - Helium circuit
    - Line Rupture CGA S-1.3 §4.9.1.1
    - Fire CGA S-1.3 §5.3.5
    - Loss of vacuum with helium small leak CGA S-1.3 §4.9.1.1
    - Loss of vacuum with air. Lehmann and Zahn.
    - NO calculation for heat released during Quench
  - Vacuum Vessel
    - Loss of vacuum CGA 341 §6.4.2

B: SOLENOID Documentation
Engineering and QA DOCS from ANSALDO

5.1. GENERAL AND MAIN COMPONENTS

- 5.1.1. TESTING AND ACCEPTANCE PROCEDURE
- 5.1.2. ACCEPTANCE AFTER FINAL TEST AT ANSALDO
- 5.1.3. ACCEPTANCE AFTER FINAL TEST AT SLAC
- 5.1.4. ANSALDO INSPECTION AND TEST PROGRAM
- 5.1.5. ANSALDO CONTROL REPORT
- 5.1.6. VALVE BOX AND CHIMNEY CONTROL REPORT "Zambetti"
- 5.1.7. CRYOSTAT CONTROL REPORT "Simic"
- 5.1.8. CYLINDER CONTROL REPORT "Ansaldo MI"
- 5.1.9. CYLINDER CONTROL REPORT "C.S.C."
- 5.1.10. CRYOSTAT STRUCTURAL DESIGN
- 5.1.11. VALVE-BOX STRUCTURAL DESIGN

5.2. SUPERCONDUCTING CABLE

- 5.2.1. CABLE WITH RUTH. N. 1
- 5.2.2. CABLE WITH RUTH. N. 3
- 5.2.3. CABLE WITH RUTH. N. 4
- 5.2.4. CABLE WITH RUTH. N. 5
- 5.2.5. CABLE WITH RUTH. N. 7
- 5.2.6. CABLE WITH RUTH. N. 9

B: SOLENOID Documentation

Engineering and QA DOCS from ANSALDO

6. AS BUILT DRAWINGS
   - 6.1. GENERAL AND CRYOSTAT
     - 6.1.1. MAGNET ASSEMBLY
     - 6.1.2. CRYOSTAT
     - 6.1.3. AXIAL AND RADIAL TIE RODS
     - 6.1.4. MAGNET SENSORS - TIE ROD SENSORS - VOLTAGE TAPS
     - 6.1.5. TRANSPORT TOOLING
   - 6.2. COIL AND SHIELD
     - 6.2.1. COIL
     - 6.2.2. SHIELD
   - 6.3. CHIMNEY, VALVE BOX AND ELECTRICAL EXIT
     - 6.3.1. CHIMNEY AND VALVE BOX
     - 6.3.2. ELECTRICAL EXIT

7.1 PHOTO

B: SOLENOID Documentation

Engineering and QA DOCS from ANSALDO

- SECTION 5.1 QA Binder
- SOLENOID VACUUM CRYOSTAT ENG CALCS BY ANSALDO
- VALVEBOX VACUUM VESSEL / PHASES SEPARATOR ENGINEERING CALCS BY ANSALDO
- RELIEF CALCS
- 2.3.1 CURRENT LEADS: American Magnetics Inc.
- 2.3.2 TIE ROD BELLOWS
- 2.3.3 TIE RODS
- 2.3.4. CARTRIDGE HEATERS:
- 2.3.5 VALVE POSITIONER: SIEMENS documentation
- 2.3.6 VALVE LIST
- 2.3.7 CRYOGENIC VALVES: WEKA Manufacturing QA documentation
- 2.3.8 CHECK VALVE: CIRCLE SEAL K220T1-4PP
- 2.3.9 SAFETY VALVE: CARRARO SP=4BAR, J orifice, CS30J-IF1L-E
- 2.3.10 RUPTURE DISK: FIKE, 6 BARA +/-0.25 BAR. AVE 6.07, 6.13,6.07, 6.02. TUV CERT ISO6718

SLAC: BaBar Solenoid/valvebox screen

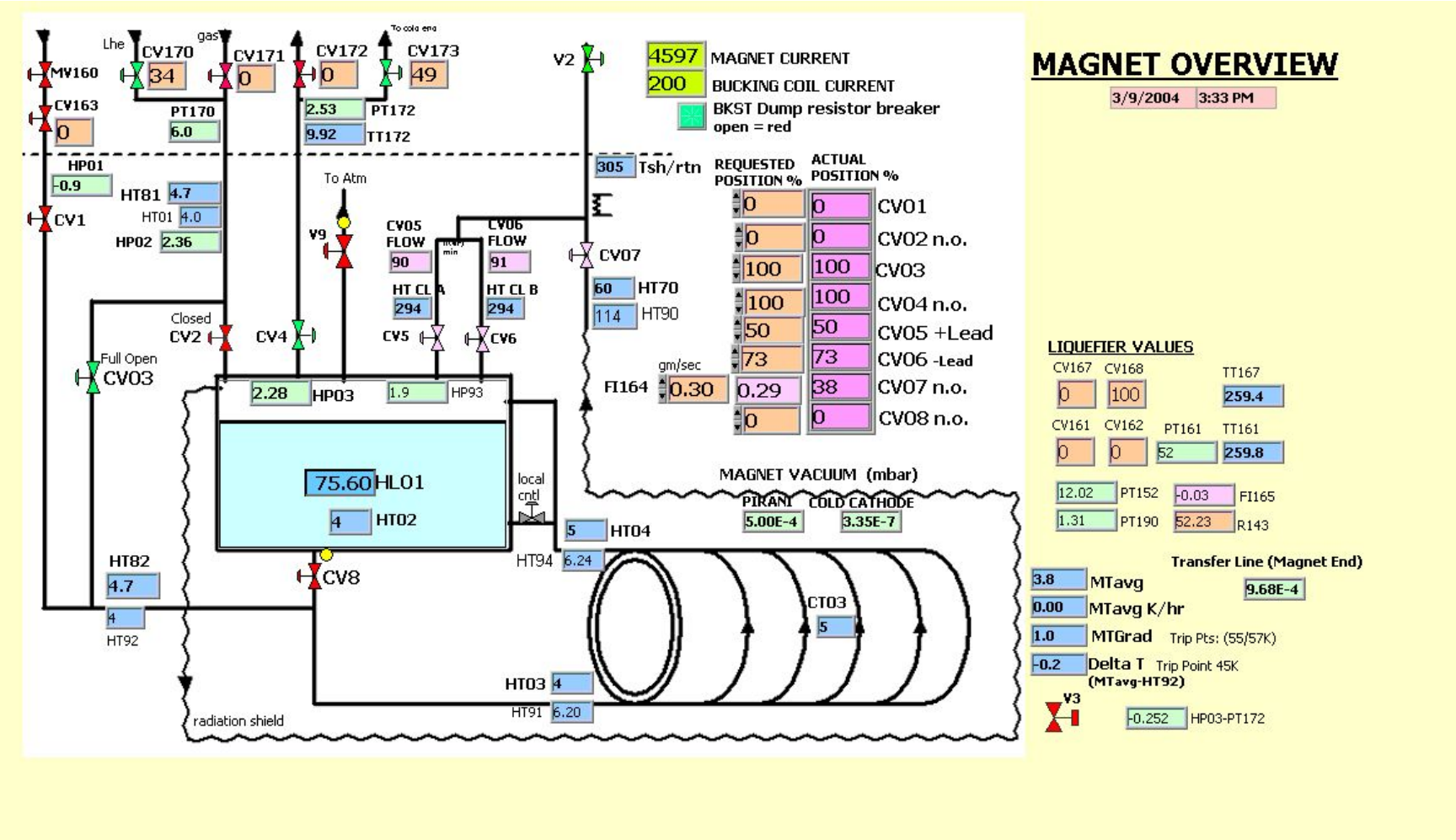

SLAC: BaBar Solenoid screen

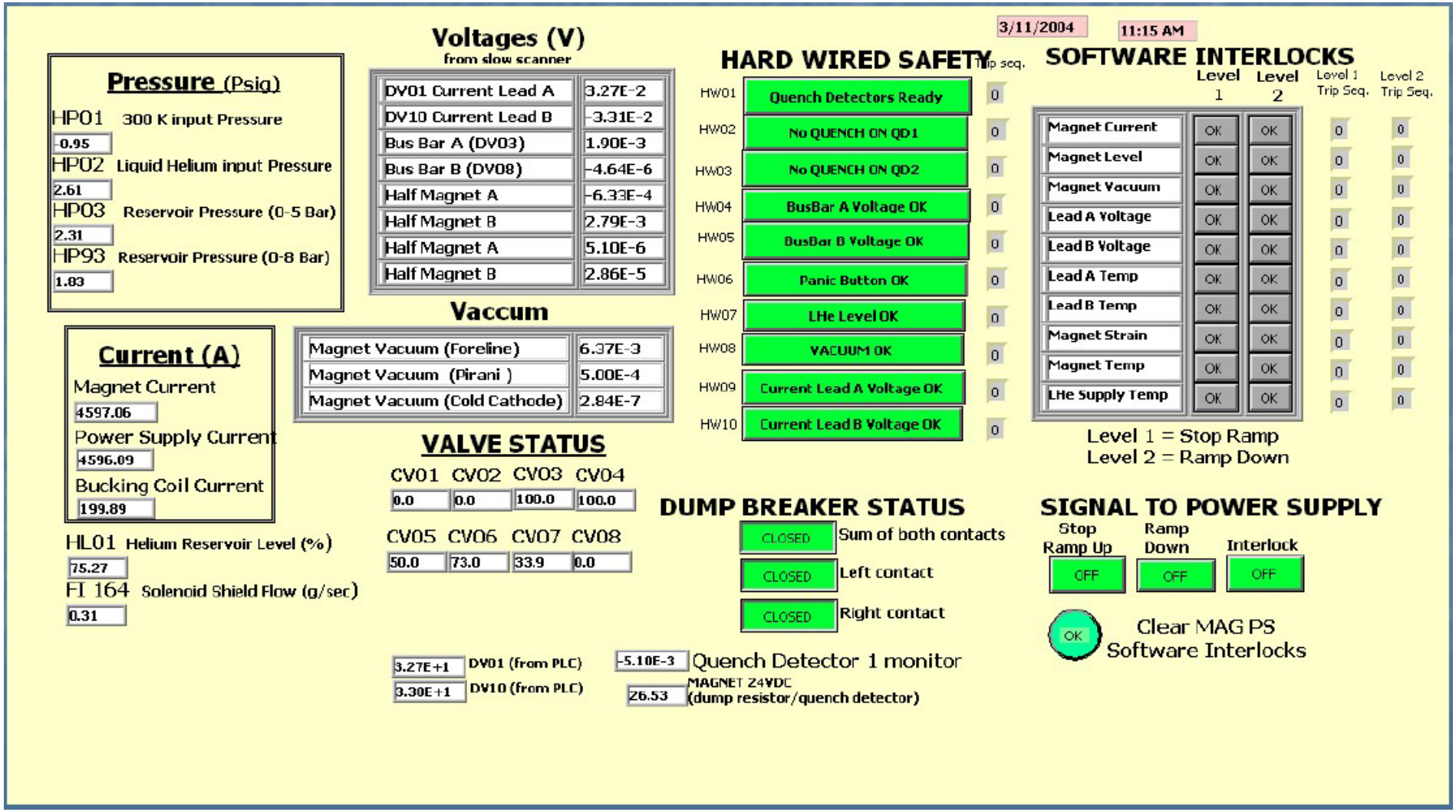

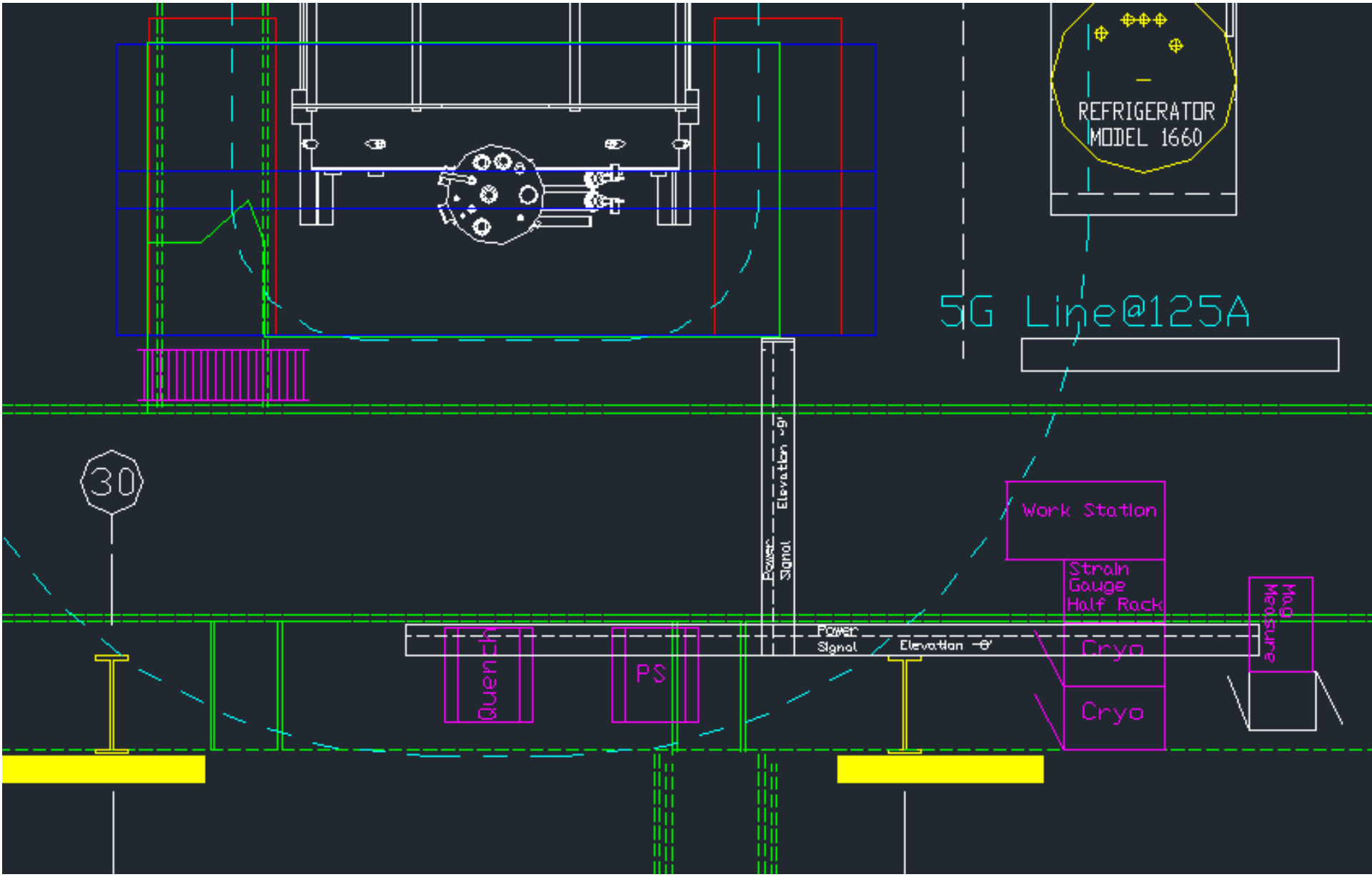
REFRIGERATOR
MODEL 1660
5G Line@125A
30
Elevation -g
Power
Signal
Work Station
Strain
Gauge
Half Rack
Mag
Measure
Power
Signal
Elevation -θ
Quench
PS
Cryo
Cryo