STAR Annual Safety Review by RESC

Robert Pak, BNL

January 26, 2017

Outline:

- The STAR Detector
- Walkthrough of Sub-Systems
- What's new for FY17 Run?
- Plan for Operations/Shifts
- Interlocks
- Summary

New for FY17 Run:

- FMS Post Shower Detector
- in situ UV curing for FMS PbGl
- Event Plane Detector (EPD) prototype
- prototype eTOF module
- RHICf approved experiment
- further tests of an EIC EMCAL design

The STAR Detector for the FY17 Physics Run

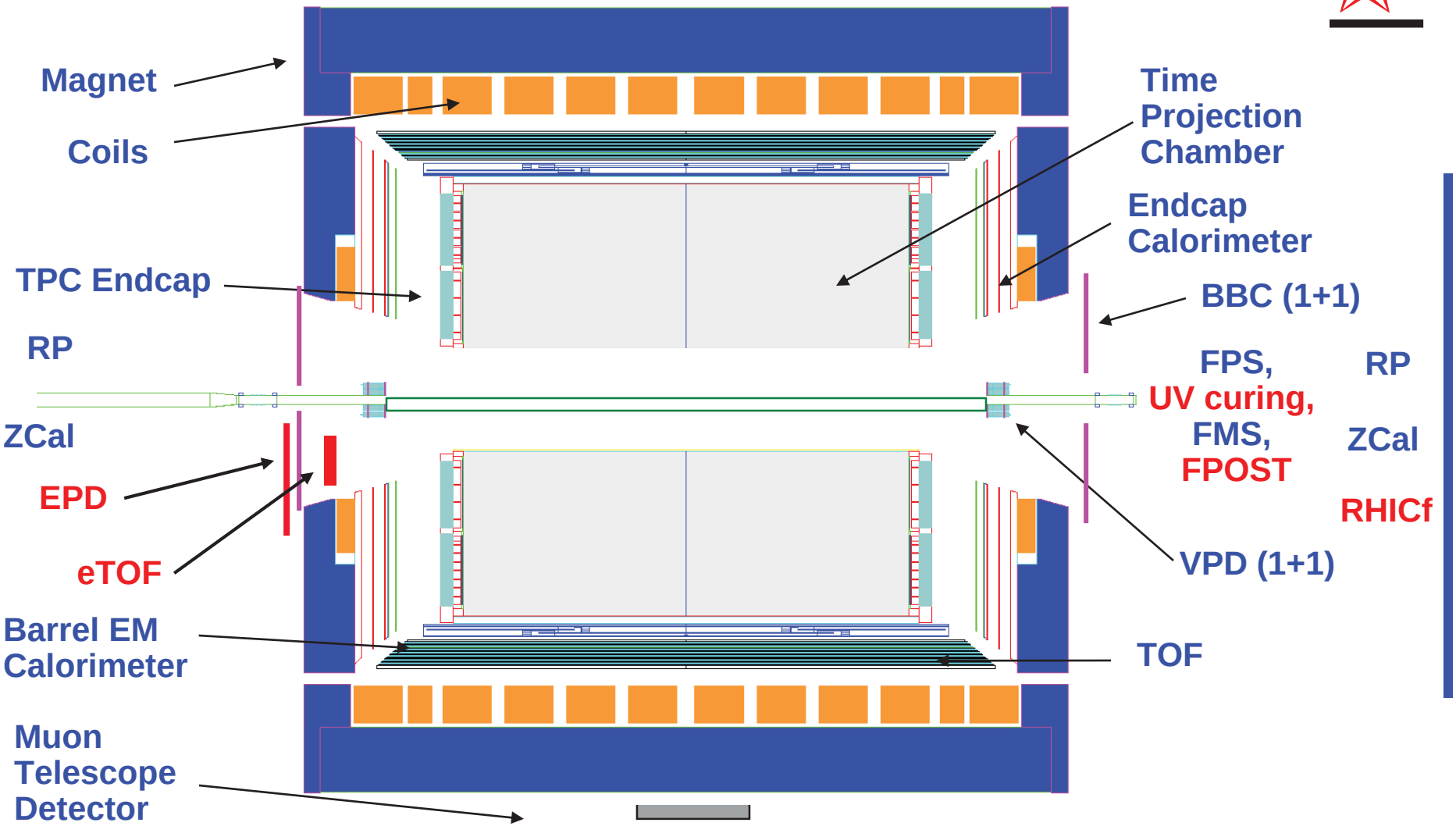

Red = New for FY17

Blue = In system for FY16 run

HFT has been removed

Removal of Pixel Detector

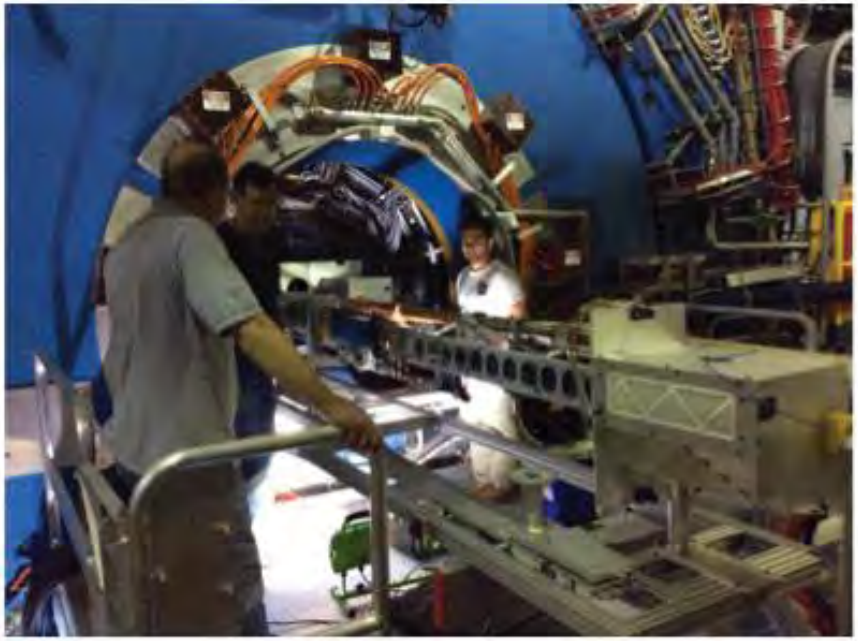

Removing the PXL detector halves on the East side of STAR. Late June 2016

Rolling the second PXL detector half into the Assembly building after de-installation. Late June 2016

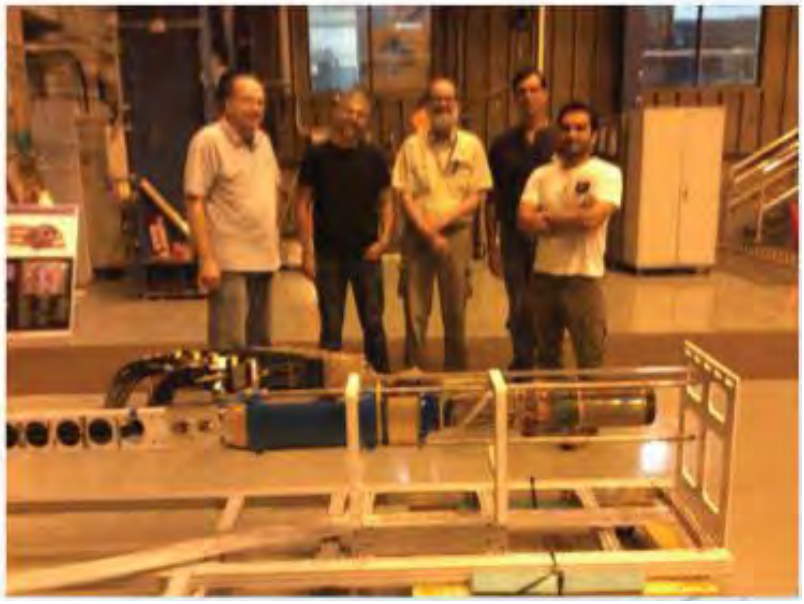

HFT has completed it's mission

Cone extraction and replacement in early August 2016

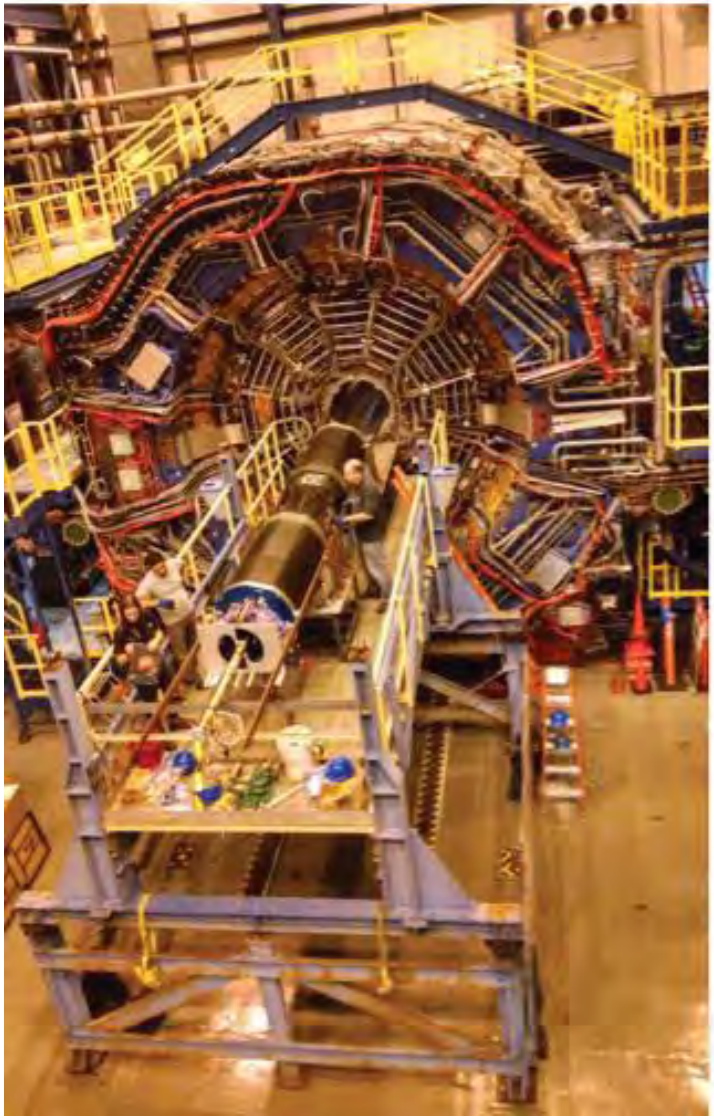

Sub-Systems: Time Projection Chamber (TPC)

1. Configuration: Full TPC used

Small MWPC gain chamber mounted inside the TPC return gas manifold (west side at 12:00). Chamber has a 100 microcurie Fe55 source inside. HV is interlocked the same as the TPC.

2. Voltages:

TPC inner sectors	1135 V
TPC outer sectors	1390 V
Gain Chamber	1400 V
TPC Cathode	Up to 30 kV (nominal 28.0)
Gated grid	115 V with a swing of +-75 V
FEE & RDO power	+/- 8V

Two lasers with no exposed beams

3. Gas system:

Main TPC gas is P10 (10% Methane, 90% Ar)

Purge flow rate = 120 lpm for a total of 3 volume exchanges (TPC volume = 50,000 l)

Normal recirculating flow = 560 lpm with 14 lpm vented out the stack (stack located on the east wall of the STAR assembly building with the vent exit above the level of the berm retaining wall.)

Insulating gap gas is N2 - flow rate is 10 lpm out the vent stack.

N2 is also used in various places in the gas system, laser system and water system - total flow ~ 50 lpm vented to the room.

4. Water cooling - the TPC FEE & RDO are cooled by a closed loop water cooling system. Heat exchange is to the STAR MCW. Total volume is ~500 gallons and flow rate is 270 GPM. The system is located in the second floor utility room at STAR. No water is released to the environment.

5. Safety interlock: The TPC has an Allen-Bradley SLC interlock system. The main system is located in the gas mixing room, with a remote slave system located on the second floor south platform. The SLC is used for equipment protection, and is closely linked to the STAR SGIS. The TPC system provides interlocks and alarms for the TPC HV and LV. Adding small delays (~1 s) in kill signals, and adding surge suppressors to system.

6. No new procedures.

No changes planned for Run 17.

Sub-Systems: Barrel EMC (No changes for Run 17)

1. Configuration: All 120 EMC modules were installed prior to the RHIC FY05 run period.

3. Voltages:

EMC barrel PMT: < 1000V fully enclosed and less than 10ma.

SMD wires: 1430V operating, 1500V maximum, fully enclosed and less than 10ma.

FEE & RDO power: +/- 8V max.

No lasers.

4. Water cooling: The SMD FEE electronics are cooled by a closed loop water cooling system.

5. Safety interlock: The EMC has a relay based interlock system. A feed from the TPC interlock system includes water leak detection and HV and LV permissions from STAR.

EMC local interlocks include:

- SMD water system flow and temperature
- Crate power supply over voltage and overcurrent.
- Crate over temperature.
- SMD FEE over temperature.

6. PSD: Same architecture as Barrel towers with multi-anode PMTs. All HV fully enclosed, power and grounding like SMD. Uses RDO hardware identical to SMD.

7. Remote LV Power supplies for the BEMC Electronics crates: The LV power is supplied to the BEMC tower crates from supplies located in Rack row 2C on the South Platform. The LV for the PMT boxes is supplied from separate supplies.

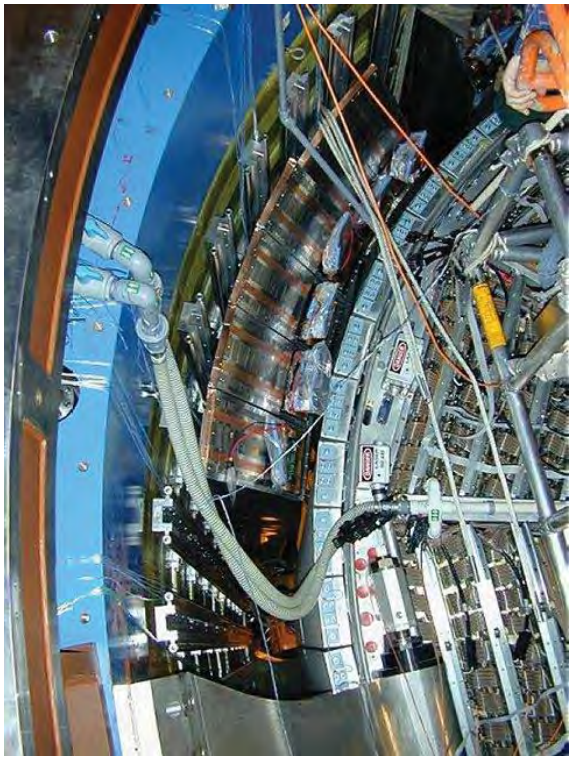

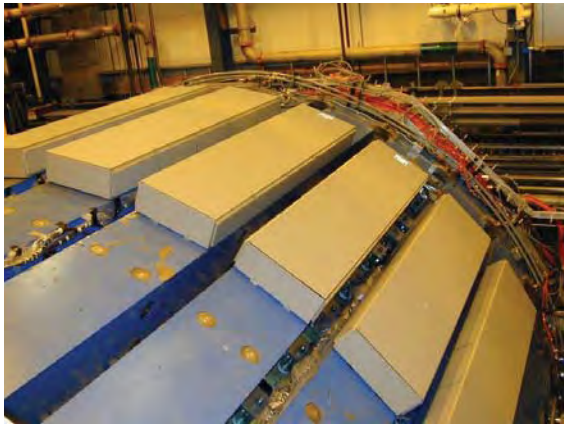

Sub-systems:
Barrel Shower Maximum Detector (SMD) (No changes for Run 17)

1. Configuration: 120 modules (complete system) and conventional systems for them installed. Full readout electronics installed.

Notes: SMD Modules require High Voltage, Gas Flow, Water Cooling and all grounds are electrically isolated from the EMC and each other.

2. Voltages:

HV supplied CAEN model SY1527. Caen supply is modular, multichannel with 4kv max per channel hardware limited to 1.5kv, 3ma/channel max, software limited to 5 uamp. SMD HV - 1430 V

3. Gas System:

Gas Bottles/Initial Supply Manifold located immediately outside door of gas utility room in STAR hall. Stepdown regulator located on third floor south platform of STAR Detector. Bubbler arrays located at 10 o'clock/2 o'clock West positions on backleg steel and West side magnet supports near 8 o'clock/4 o'clock positions.

SMD Gas is 90%Argon-10%Carbon Dioxide at low flow and atm. pressure.
Maximum Supply Pressure to Modules is 9 PSI

Pressure inside the SMD module -
12 mm H2O above atmospheric at nominal gas flow.
Total Gas Volume ~ 120,000 cm**3

Modules are ganged together in pairs, i.e. 120 modules = 60 pairs
Nominal Flow Rate - 10 cm**3/min /module
Total Nominal Flow rate - 1200 cm**3/ min

Gas is low flow, low pressure and non-hazardous.
Accidental overpressure of supply line (>50 PSI) vented outside building.
Gas is vented outside magnet thru system of bubblers into hall.
Gas Flow is monitored by remote TV cameras on array of bubblers.

4. Water Cooling:

The SMD FEE are cooled by a closed loop water cooling system.
Heat exchange is to the STAR MCW.
Total volume is ~ 1 liter, total flow rate ~ 100 cc/s.
Cooling water circuit supply/return rings on West end of Magnet. Cooling loop installed on East end of magnet.
Routing to detectors through plastic hoses with separate shutoff valves at 6 places around the ring on the West end of the magnet.
Water may be shut off at manifold on NorthWest floor level of STAR detector.

No water is released to the environment.

Supply Pressure = 110-120 PSI
Return Pressure = 23 PSI

All circuits pressure rated to 245 PSI @ 100F
Installed heat-exchangers tested to 150 PSI to UCLA, all circuits tested being installed to 110-120 PSI.

5. Safety Interlocks:

High Voltage has hardware interlocks similar to the SVT subsystem.

Front End Electronics has temperature-sensors to shut off low voltage in case of loss of chilled water.

Gas system has a vent valve outside of the building in case of accidental overpressure of the supply line.

Sub-Systems: Endcap EMC (No changes for Run 17)

Configuration: Full structure mounted on west STAR poletip; all twelve 30° sectors loaded with tower scintillator megatiles and extruded strip Shower Maximum (SMD) modules (Same as last year).

Instrumentation: Magnetically shielded PMT boxes and readout for all 720 towers (12 sectors) on back of poletip. Readout of Multi-Anode PMT boxes for all sectors of SMD, PreShower and PostShower layers.

Power & Interlocks: Supplies and electronics crates in rollaround racks w/ shore or platform power; local smoke alarm trips rack shunt breakers.

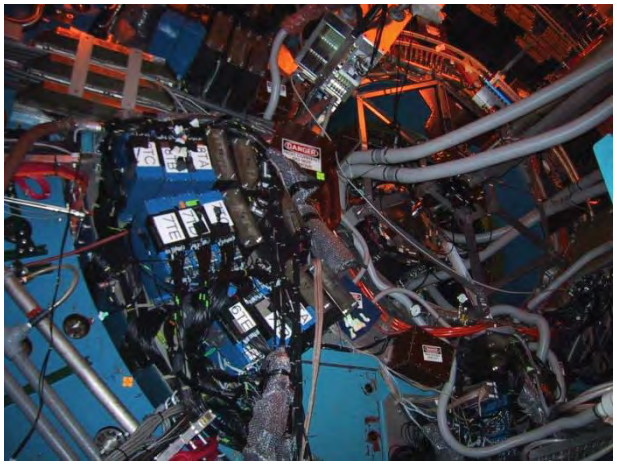

Voltages: HV (~ 1000V) for PMT/MAPMT supplied via CW bases; HVSys made controller supplies 160V and safety shutdown features; LV power (WIENER) supplied remotely to tower crates at ±5V, ±12V and MAPMT box FEE electronics via distribution panels at ± at 7V, +4V.

Water Cooling: MAPMT boxes cooled by commercial closed-loop chiller system with ~ 10 gallon total volume; local safety interlocks.

Laser: Nd/YAG (λ=355nm), primary 11mJ/pulse @ 10Hz; west tunnel operation enclosure, split and delivered via (closed) fiber distr network ; misc. monitoring PMT's, diodes and electronics

Sources: sealed 300 μCi ^{60}Co used only in test/calibr mode when poletip is removed from STAR; small alpha test sources enclosed in level #2 laser splitter boxes on back of poletip.

Sub-Systems: ZDC Detectors (No changes for Run 17)

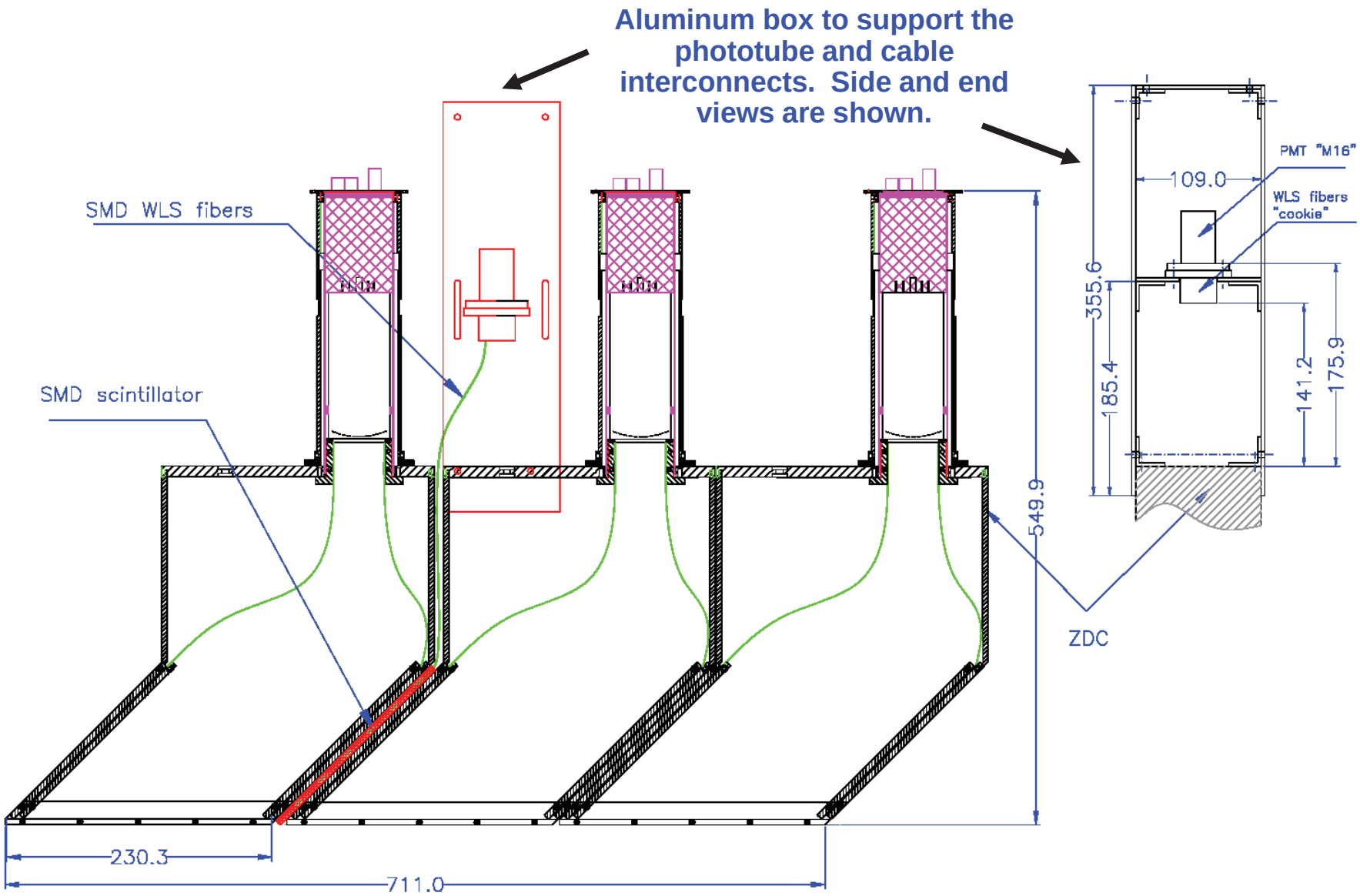

Sub-Systems:
Beam Beam Counters (BBC) (No changes for Run 17)

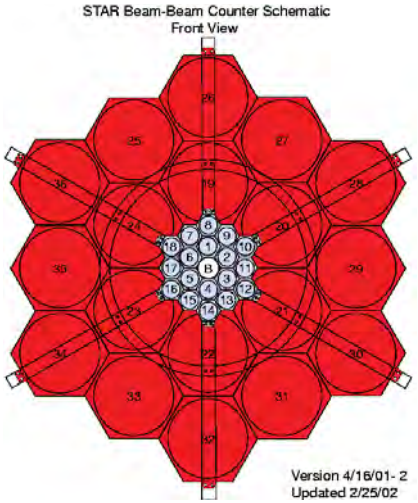

1. Configuration:

- System fully operational since FY04. PMT boxes have continuous thermal monitoring.

- Readout is via “trigger” electronics.

2. No gas system or water cooling.

3. Voltages:

- The PMTs for the BBC operate at an average cathode voltage of -1400 V.

- The HV is supplied by a LeCroy 1440 system located on the South Electronics platform

4. Interlocks:

The electronics and HV systems for the BBC are housed in electronics racks on the South platform. These are standard STAR racks and have have standard STAR interlock features (e.g. rack based smoke and water leak protection, power shutdown via SGIS).

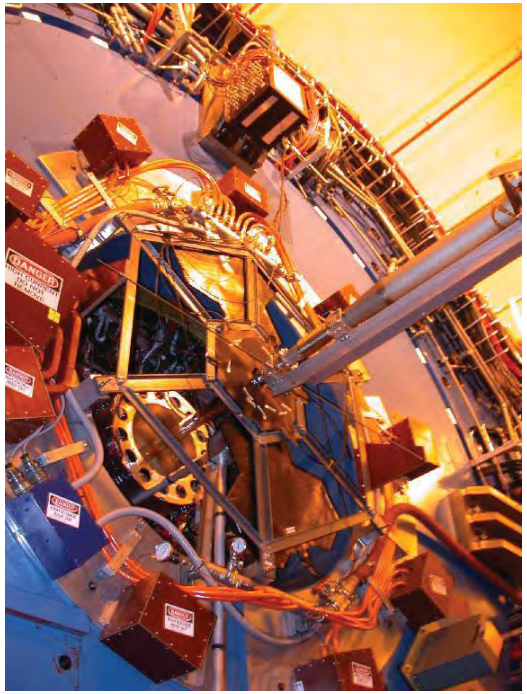

Mechanical mounting frames for large tiles on East side enhanced prior to Run 13. Aim was to allow for quick removal and replacement for PXL installation.

Sub-Systems: upVPD (No changes for Run 17)

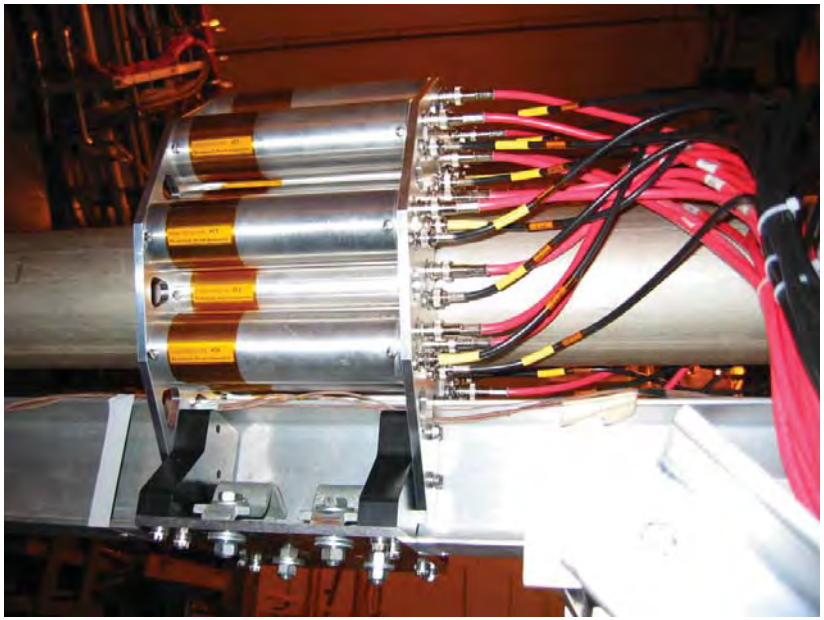

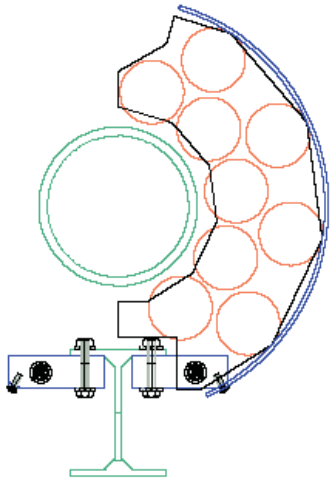

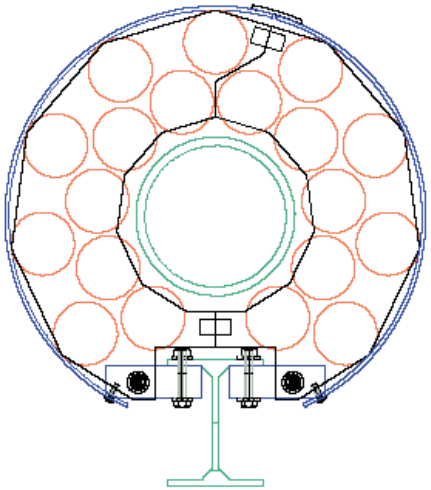

38 chs of mesh PMT + no magnetic shielding.

First installed and used in Run 7.

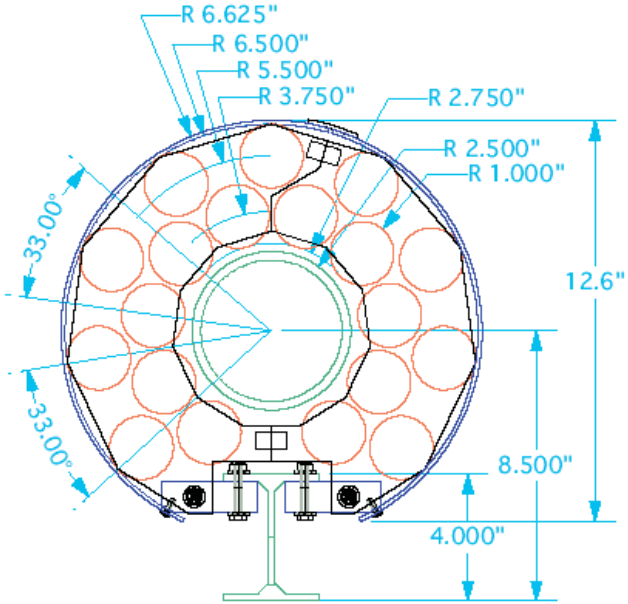

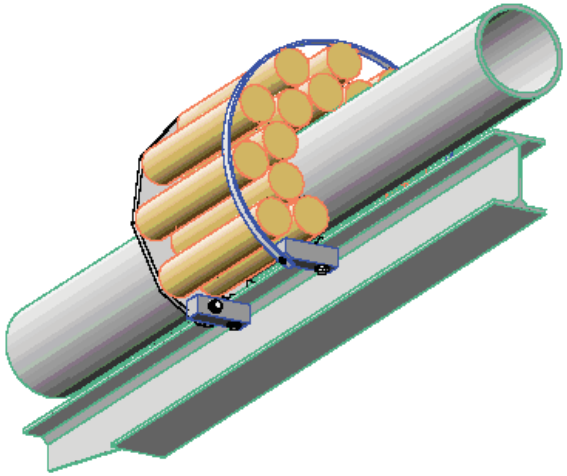

Sub-Systems: TOF (No changes for Run 17)

MRPC TOF

120 “trays”, with final onboard electronics. The first layer of FEE, called TINO, closes the gas box and provides amplification and discrimination. A second layer, called TDIG, digitizes and buffers the data.

Gas System:

- R134A,~1500 ccm purge mode
- isobutane, 75 ccm purge mode

all vented to the atmosphere, outside through a stack.

Filters added to gas system. Operated in re circulation mode in Run 16. Resulted in more than a factor of two reduction in Freon and Isobutane use!

Voltages Used:

HV - +/- 7.5 kV, <50nA, total per tray

LV - +5 V, 30A, ~115 W/tray

~ 60 W/start detector

~65 W/THUB

HV and LV Supplies used:

HV - CAEN SY1527LC

- A1534 N & P modules
- N.B. Same supply used for BSMD HV

LV - WEINER PL512

Interlocks:

Power to racks is dropped upon loss of STAR global interlock. This drops HV and LV. Interlocks also in gas mixing room. Stop gas flow upon loss of SGIS gas permissive.

Procedures:

Gas system procedure.

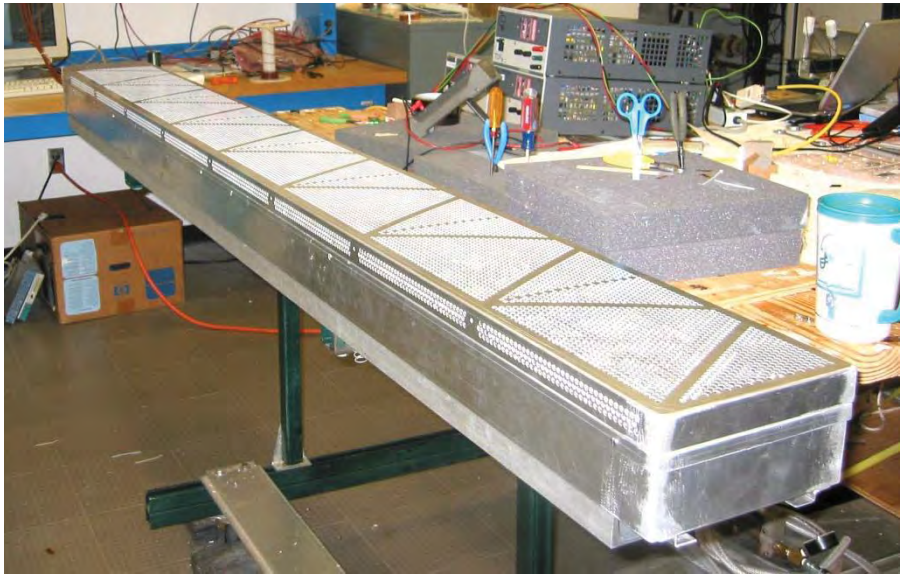

Sub-Systems:
Muon Telescope Detector (MTD) (No changes for Run 17)

- MTD detectors use the same technology and utilities (cables, connectors, LV and HV supplies) as the STAR TOF system.
- Last year (Run 16) there were 122 MTD modules installed.

MTD gas mixture (94.5% Freon R134, 5% Isobutane, & 0.5% of SF_6).

Total gas flow rate estimated to be ~ 800 ccm.

Sub-Systems: FMS (No changes for Run 17)

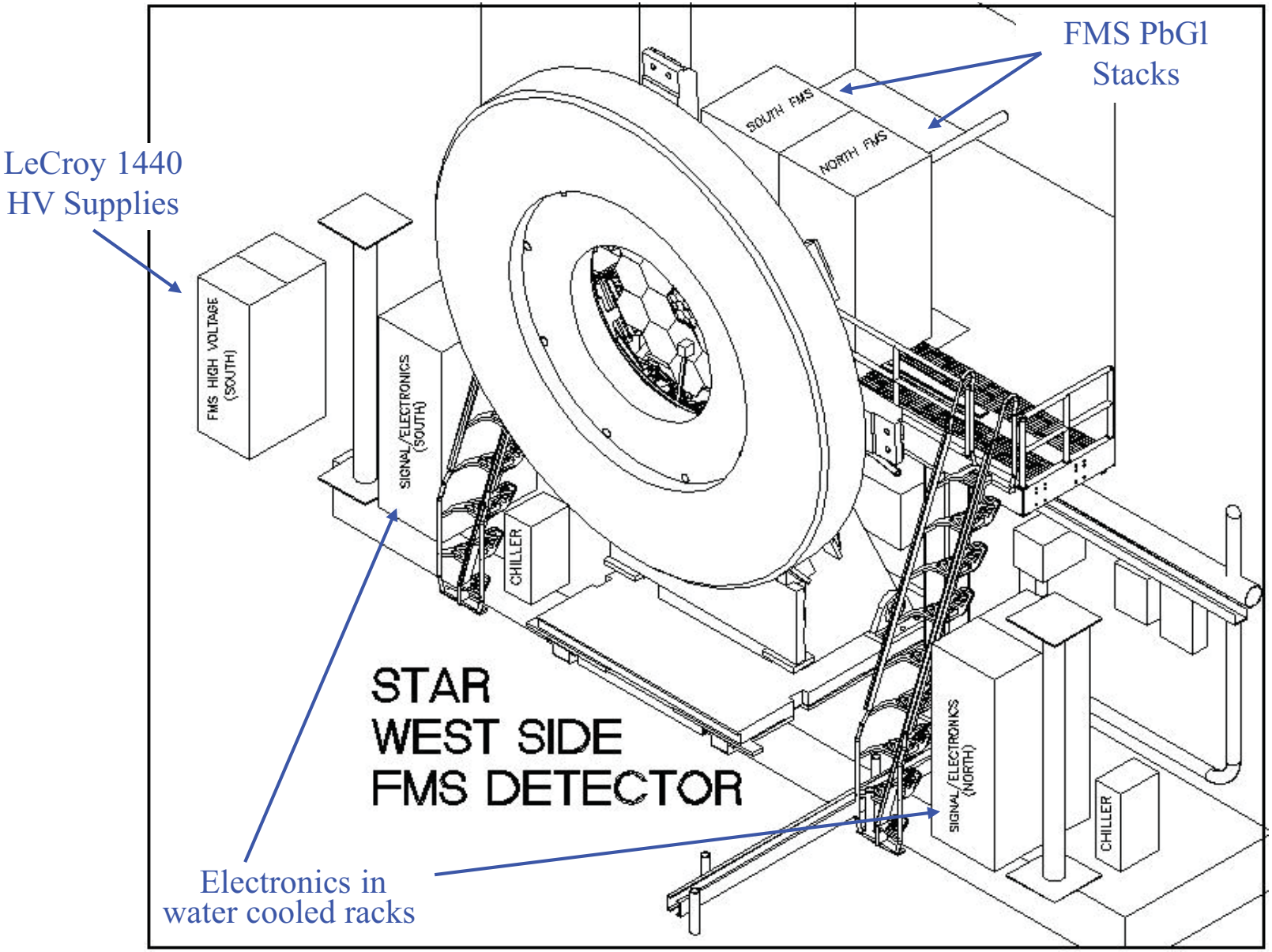

south FMS before sealing light tight enclosure

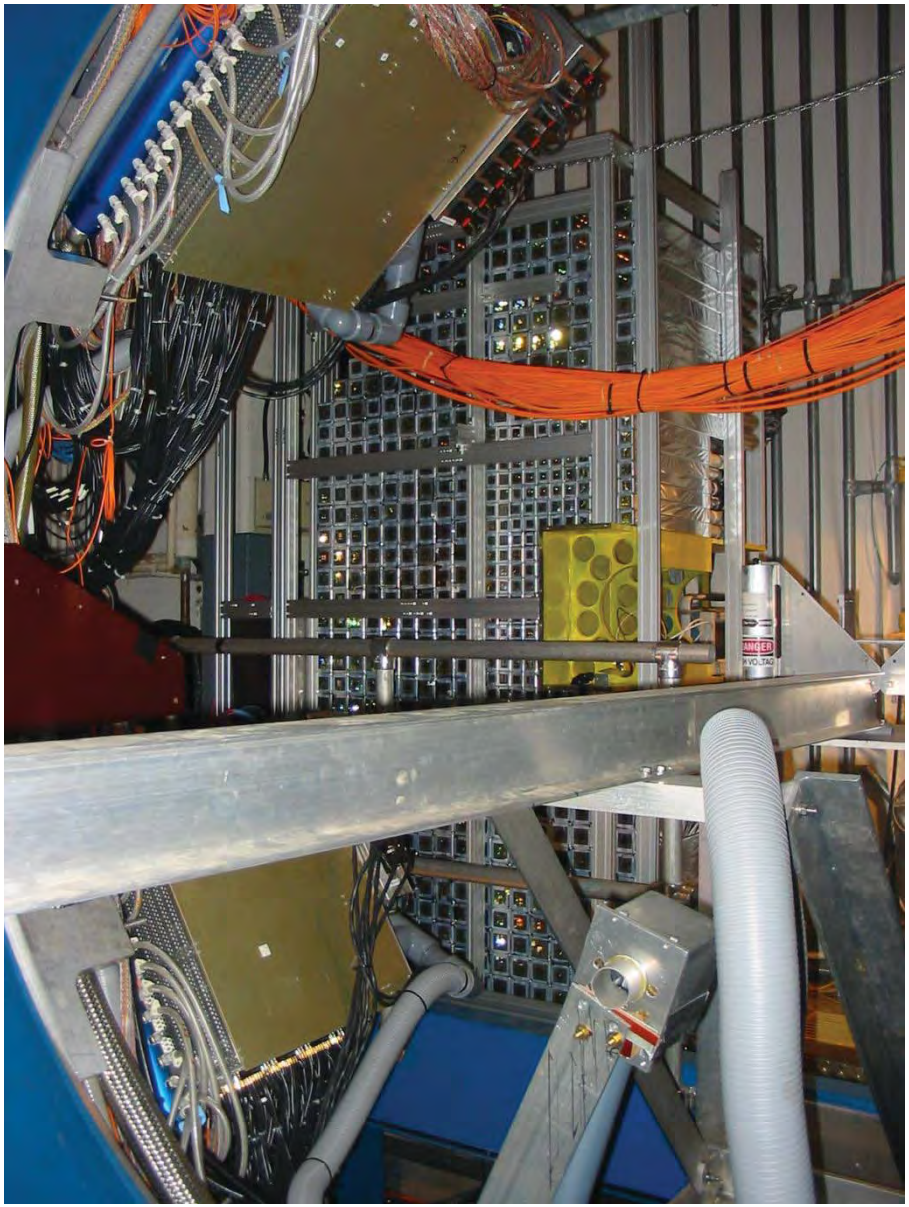

Details on Pb-Glass Cells:

- **3.8cm x 3.8cm x 45cm glass**
  - **mass of glass bar:** 2.5 kg each
  - total number: 476 (238 per half)
  - phototubes + bases: 224 FEU-84 + Penn State Cockcroft-Walton bases
  - 252 XP2972 + Cockcroft-Walton bases from Nanometrics
- **5.8cm x 5.8cm x 60.2cm glass**
  - **mass of glass bar:**10 kg each
  - total number: 688 (344 per half)
  - PMT + bases Amperex XP2202 + Zener/resistive divider (replaced for Run 15)

Changes in Run 15:

- Large cell PMTs/bases obtained from CDF decommissioning
- replaced 784 PMTs with EMI 9954B
- CDF Bases HV safety tested to 5000V

FMS with pre/post-shower

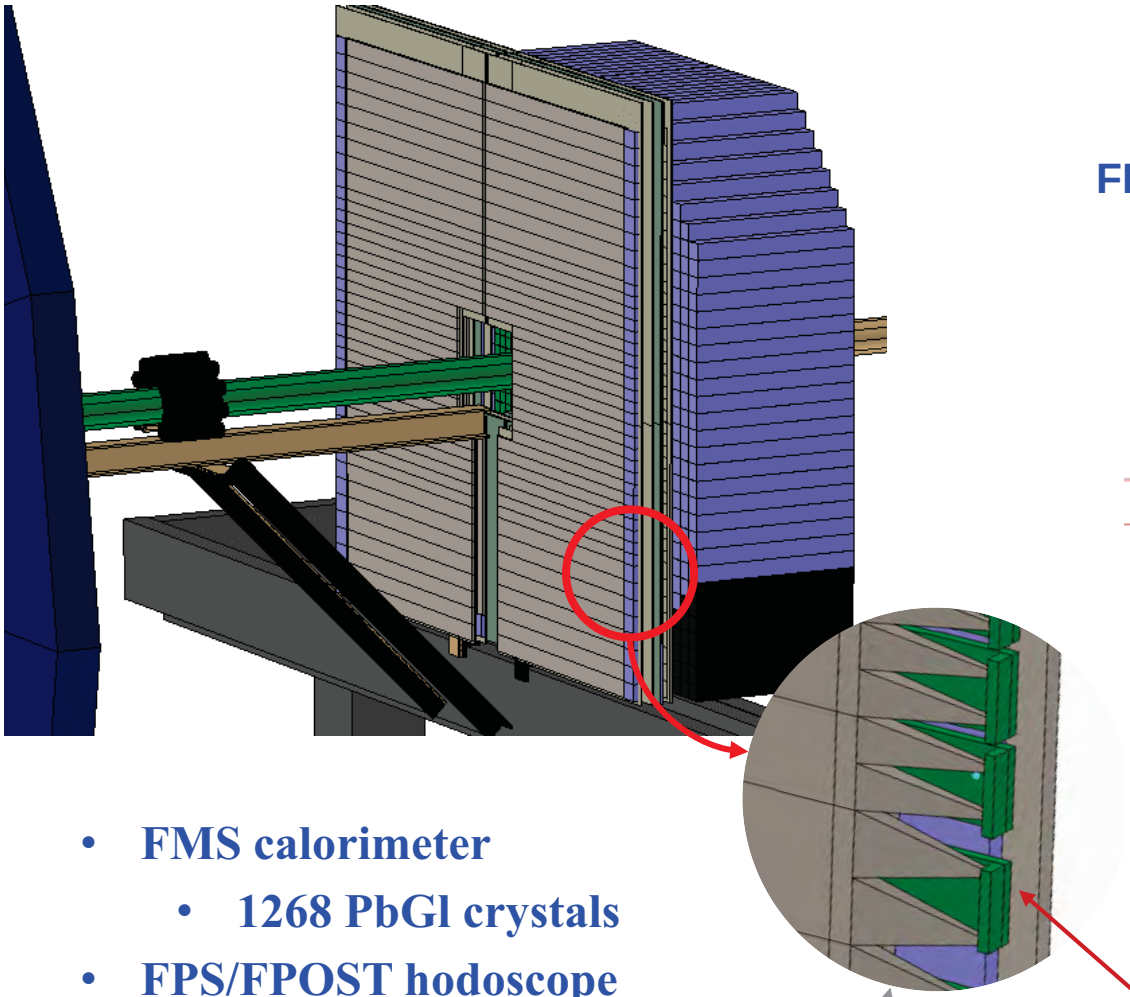

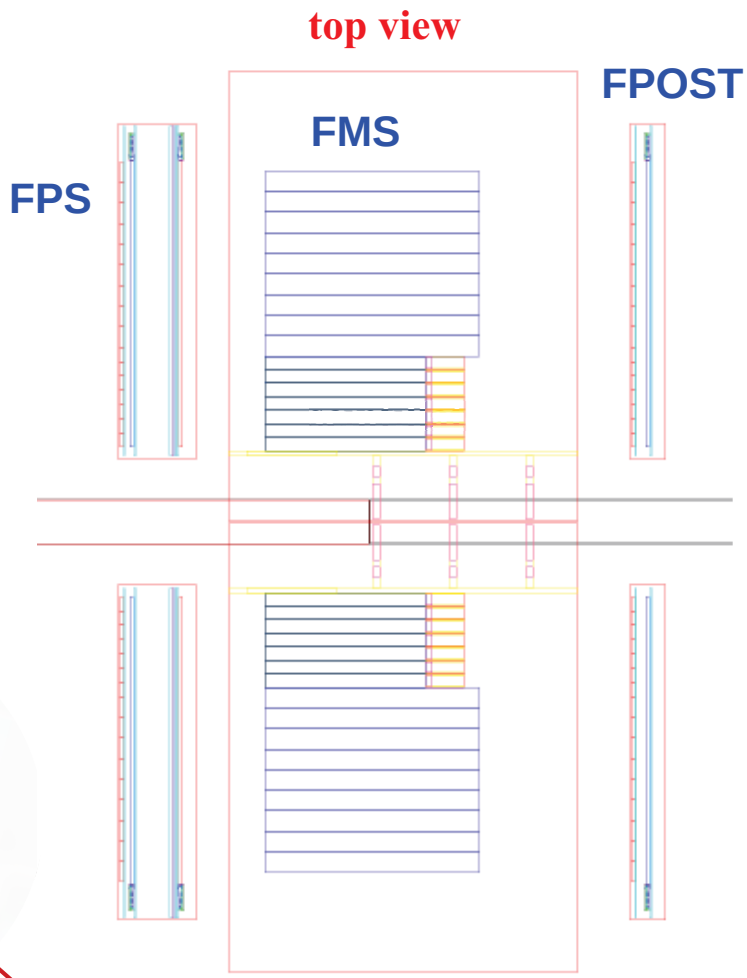

- FMS calorimeter
  - 1268 PbGl crystals
- FPS/FPOST hodoscope
  - 252/241 scintillators
- matching x/y granularity

light guide

readout
Hamamatsu
12572-025/050P

Panel assembly: gluing of scintillator slats

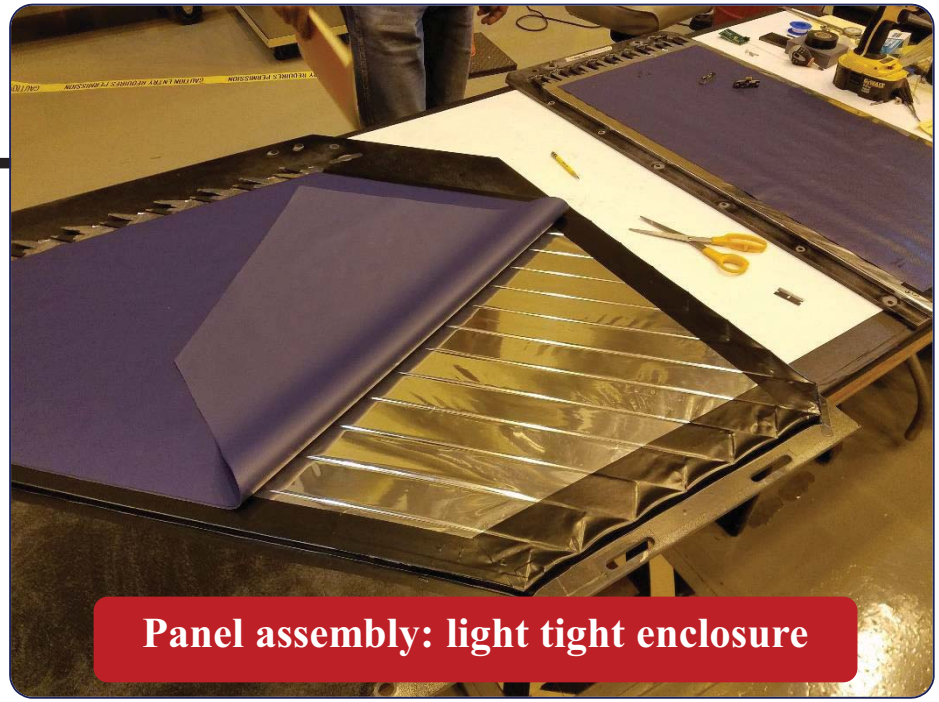

Panel assembly: light tight enclosure

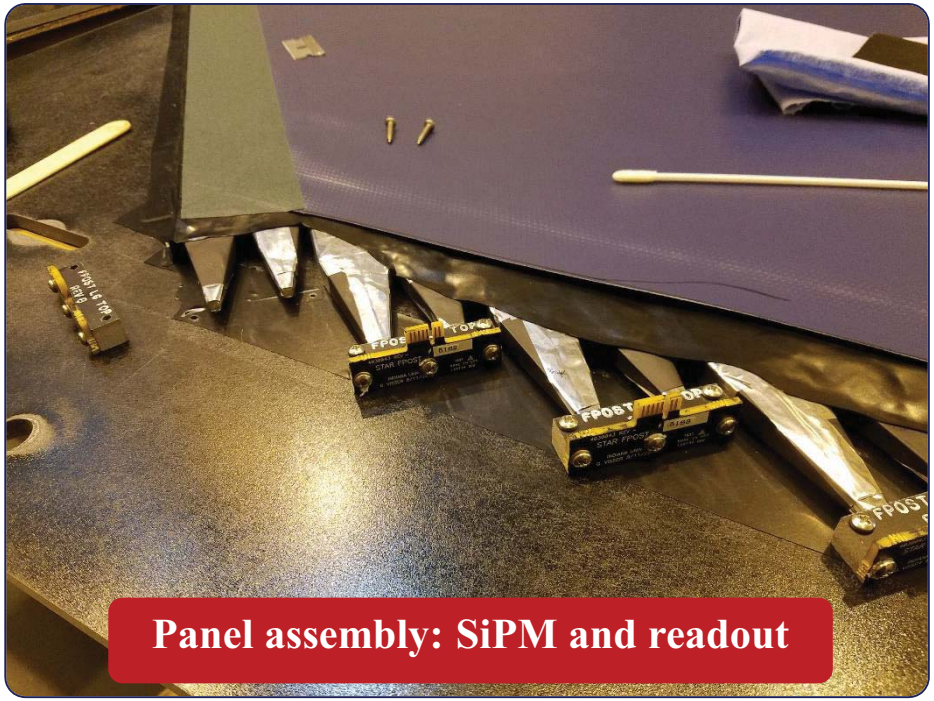

Panel assembly: SiPM and readout

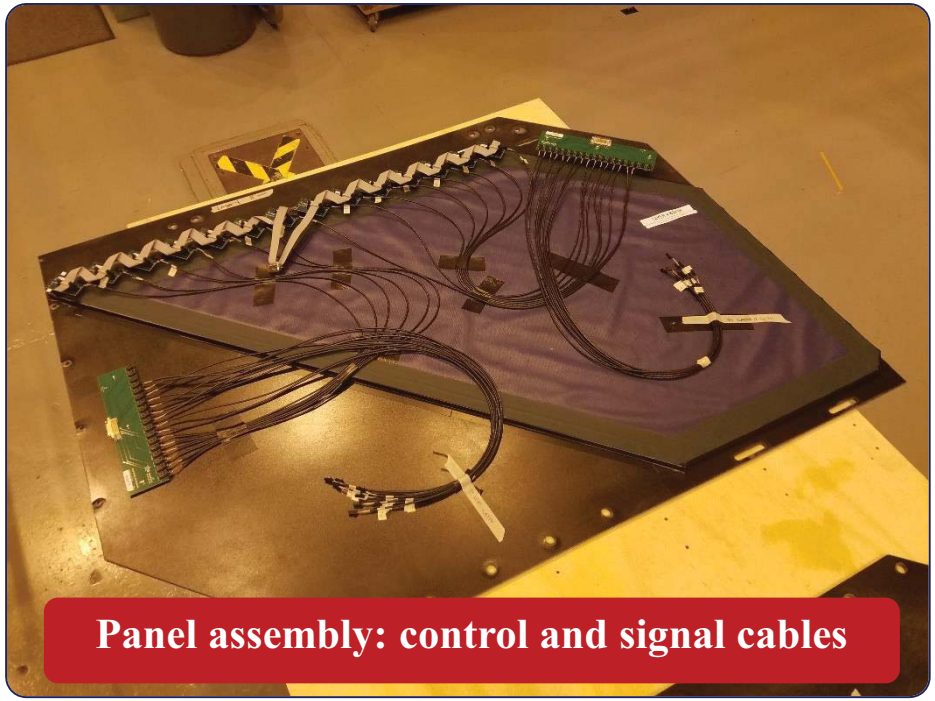

Panel assembly: control and signal cables

Panel hanging: center panels

Panel hanging: large panels (south side)

Panel hanging: half opened

Radiation Damage to Lead Glass

Off axis view of PbGl stack.
UV system must fit in this space
between the frame and glass.

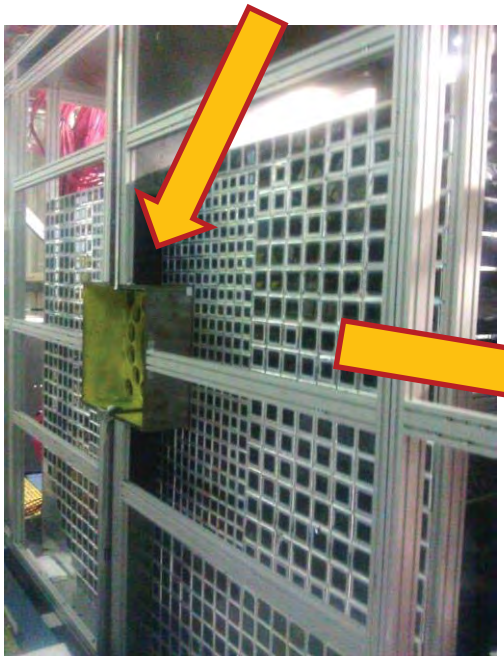

Front View: Detail of PbGl darkening
Blocks are precisely square. They appear
uneven because blocks are wrapped in
aluminized mylar.

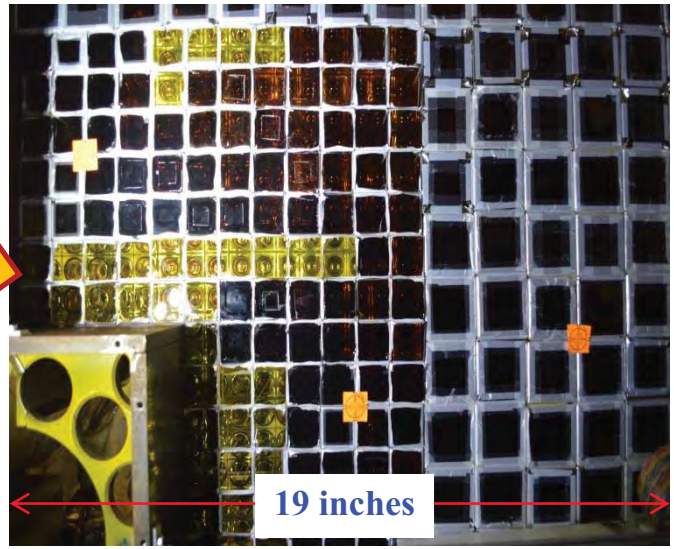

Clear 'radiation hard' glass appears yellow, but transparent
Damaged glass appears black in the worse areas and brown in less affected areas

STAR built an UV system to 'cure' PbGl in situ for FY17 run

FMS UV LED Layout (one quarter shown)

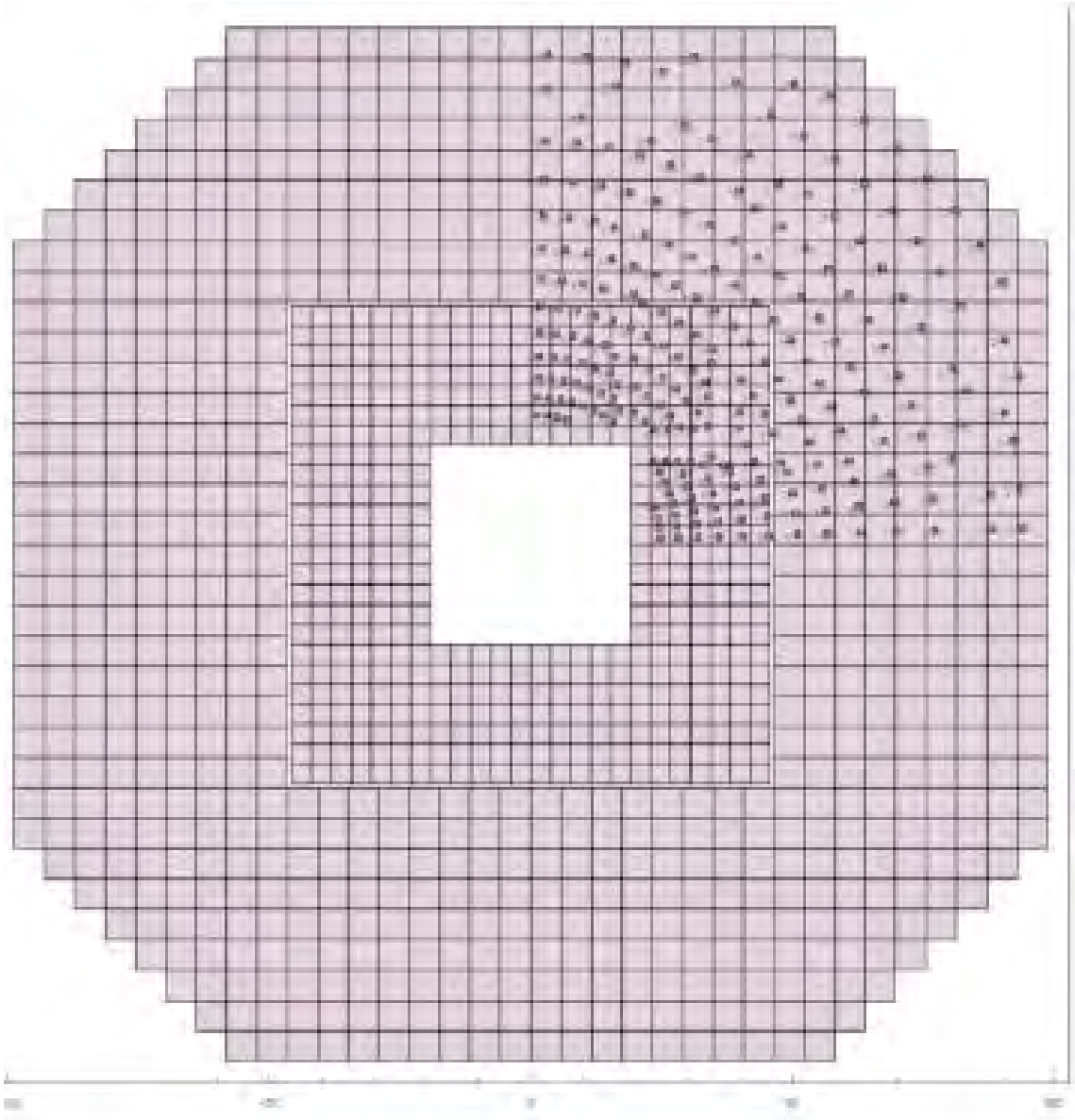

FMS UV LED Cooling

»Back to Tube Liquid Cold Plates

416301U00000G

7 cold plates 1.4 cm thick
under a thinner copper plate
Power / plate 100-800 W/plate
Greatest heat load/plate = 800 W $\rightarrow \Delta T = (.005)\ (800) = 4$ Deg K @1 gal/min

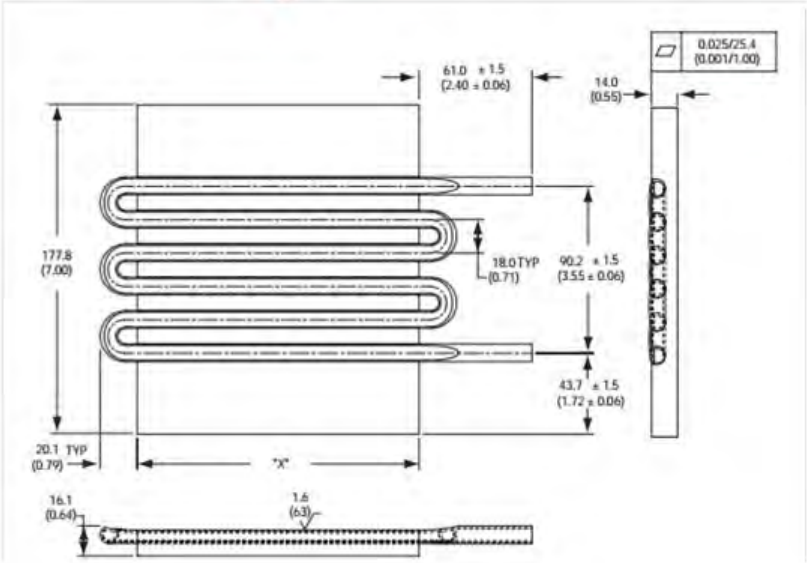

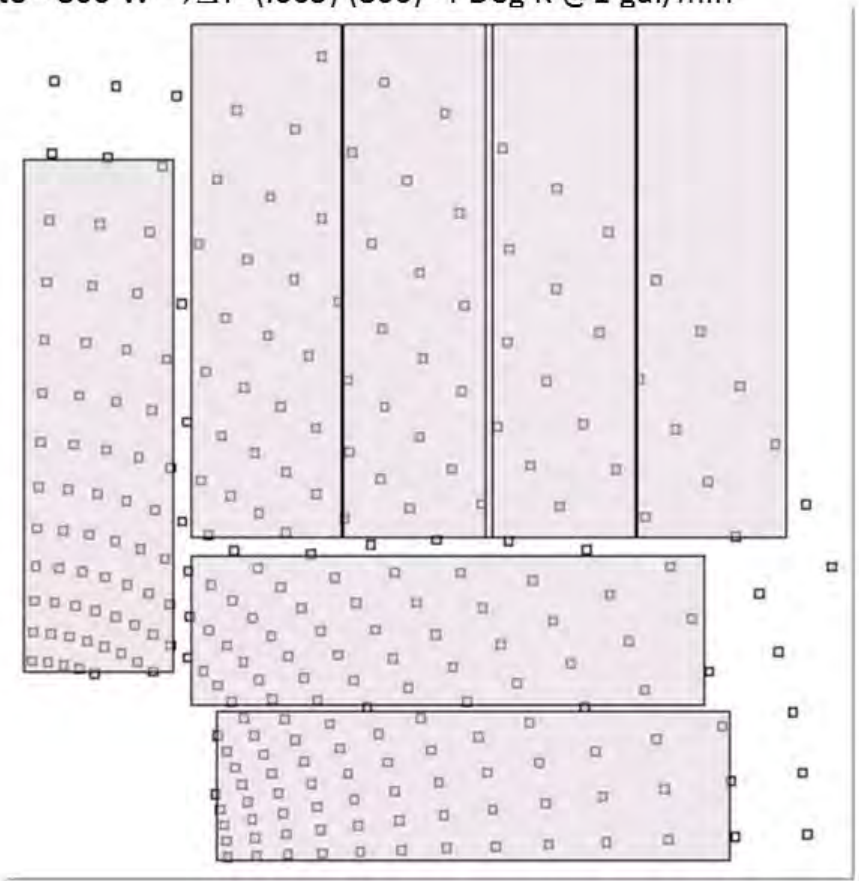

Power and cooling already separately reviewed.

In situ UV LED curing system

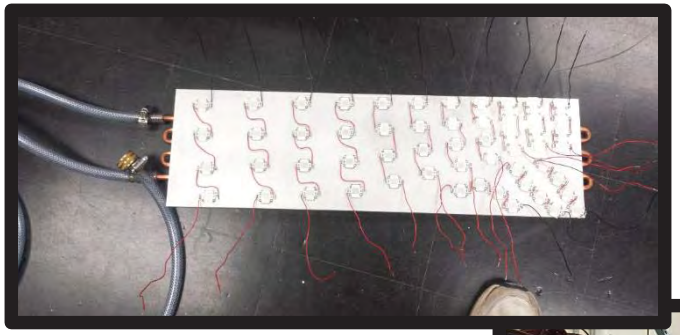

LEDs on cold plate

South FMS
Full system

Side view
during
operation

Monitoring/Operation from Control Room

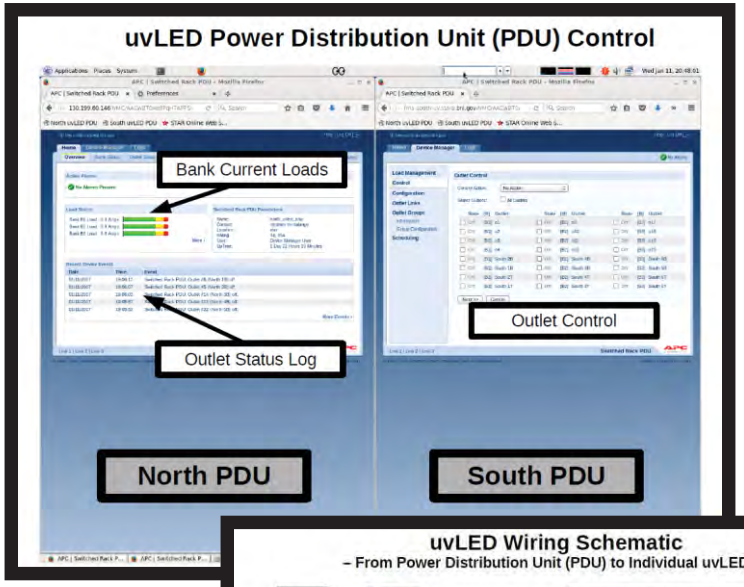

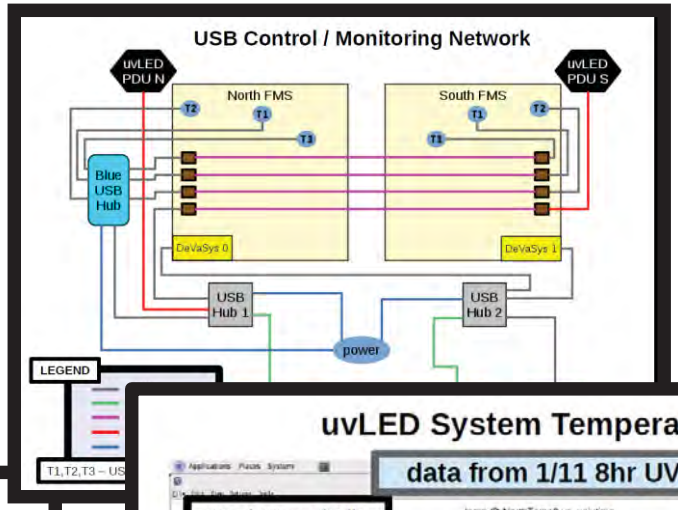

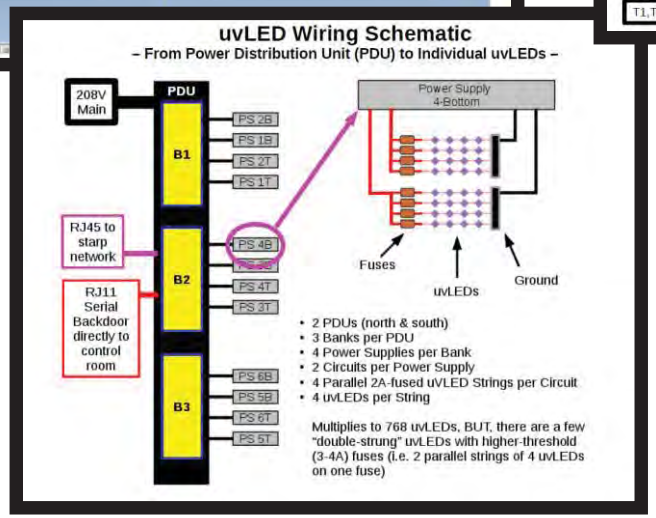

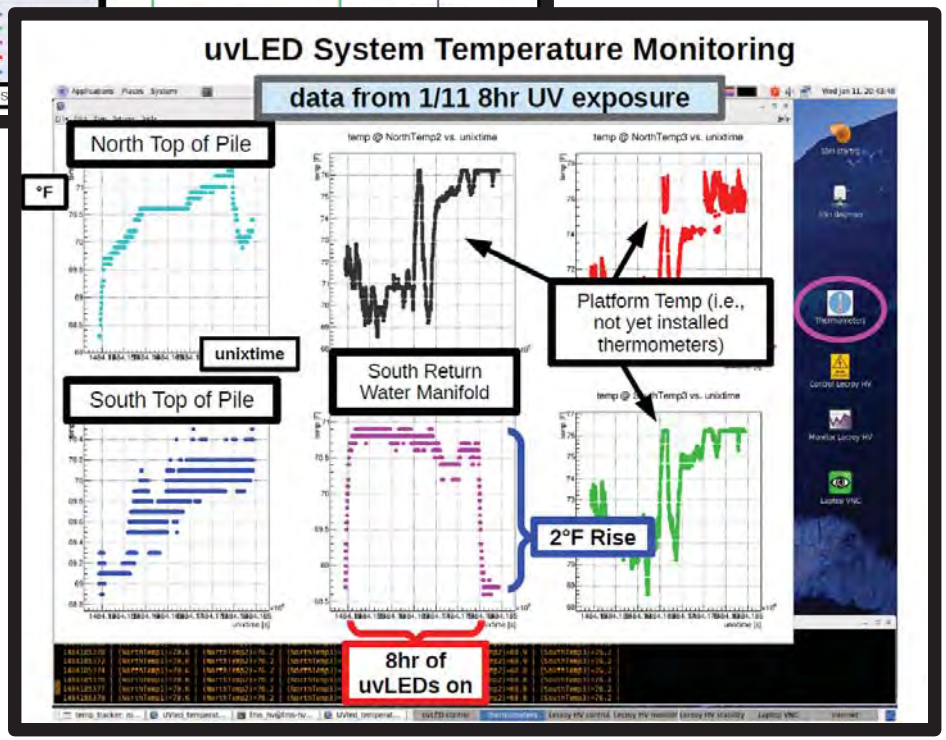

Event plane detector prototype (EPD)

- 2 wheels, each composed of 12 supersectors
- each supersector: 31 optically-isolated tiles
  - 1.2-cm-thick with 3 turns of WLS fiber
  - total of 12 x 31 x 2 = 744 channels
- optical signal transported 5.5 m on clear fiber
- coupled to SiPM
- read out by STAR FEEs/QTs, similar FPS
- custom-built connector components

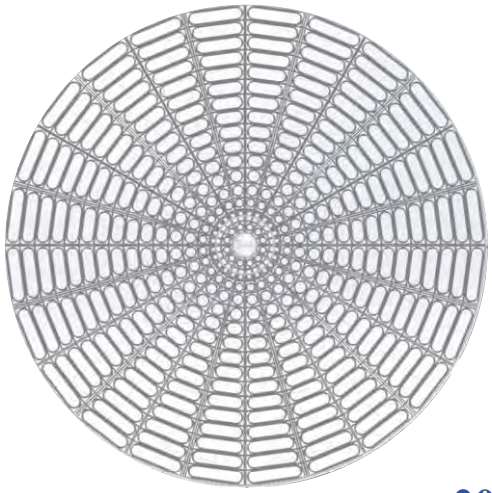

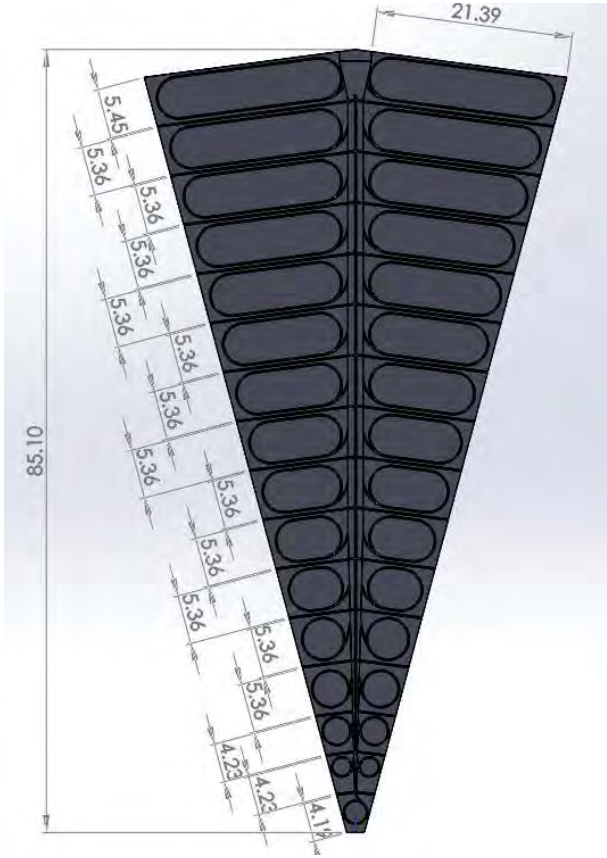

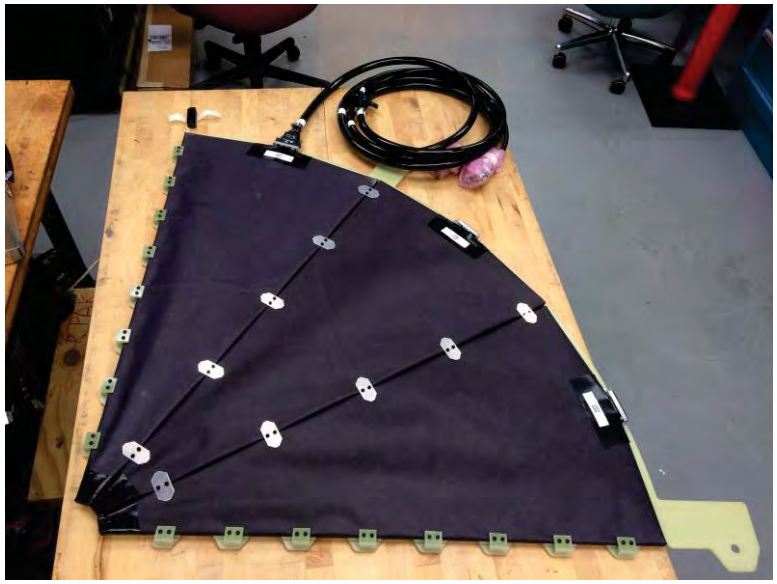

2016

Construction of 4 supersectors, FEE, mechanical

Monitoring, slow controls software & GUI

Install 1/8 EPD in STAR behind BBC

2017

Commissioning run in STAR of 1/8 EPD behind BBC

completion of EPD (24 supersectors) & installation at STAR

2017 install 1/8 EPD

Status:

✓4 sectors @ BNL, tested
✓8 SiPM cards
✓4 bundles
✓frame, FEE boxes
✓mount FEE box (w/o cards) to STAR
✓mount SS to frame
✓install one EPD quadrant

to do as of 25 January:

- load FEEs into mounted FEE box
- integrated tests of fibers, SiPMs, FEEs
- route fibers – optically connect SS to FEE
- test connectivity thru QT
- finish QA, monitoring/logging software

2017 Goals:

- Determine trigger algorithm for 2018+
- Develop software framework to incorporate the EPD into STAR software
- Demonstrate detector performance
- Complete construction!

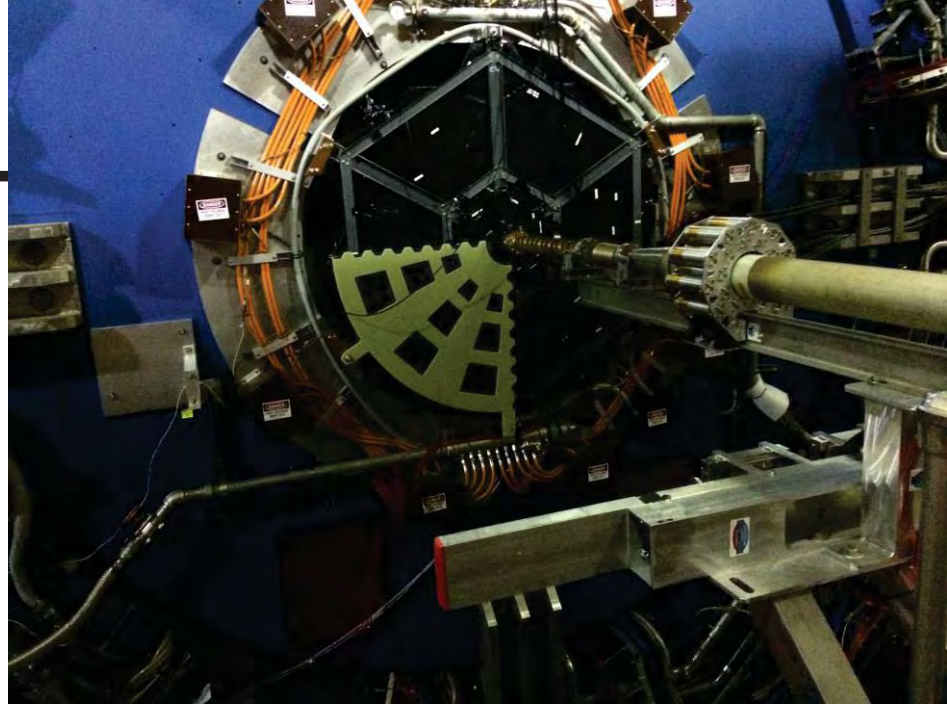

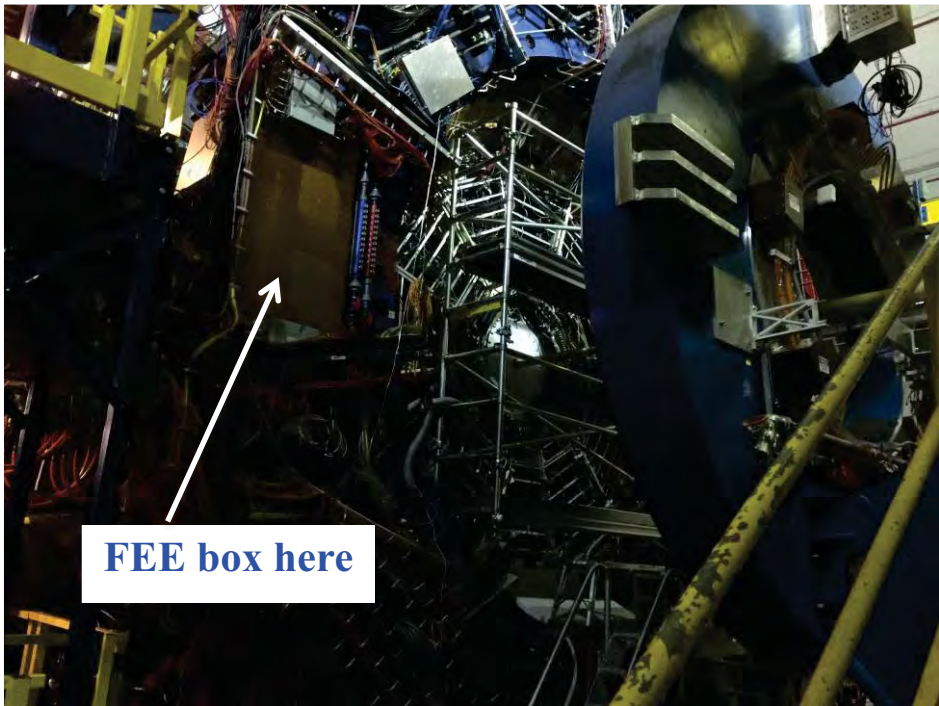

FMS electronics (EPD values in Red)

TUFF Boards (2(1)):

- +/- 6.5 V, fused on input to 12A, nominal I ~ 7 A
- 90 V, fused at 250 mA, Max I = 55 mA
- Cable rated to 300 V

Fee Boards (244(12)):

- +/- 6.5 V
- I ≤ 70 mA/FEE board
- Gained into chains of ~ 20 boards, fused before cable for 2.5 A

SiPM Boards (244(12)):

- Max V = 90 V DC
- FEE board current limits SiPM current to ≤ 100 uA

QT Digitizers are STAR Standard Trigger Electronics

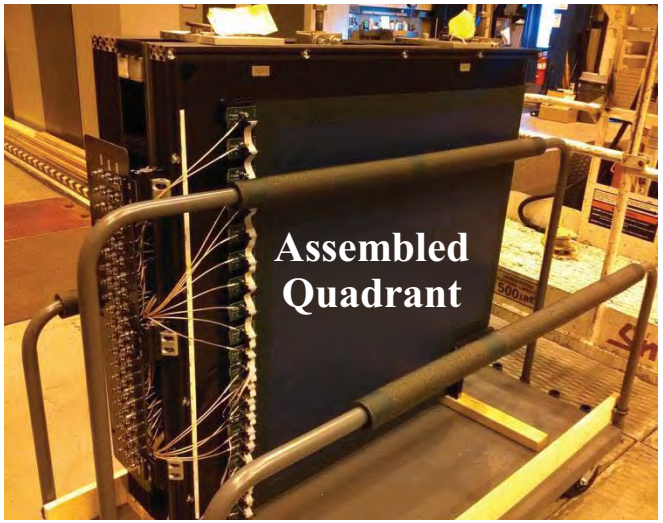

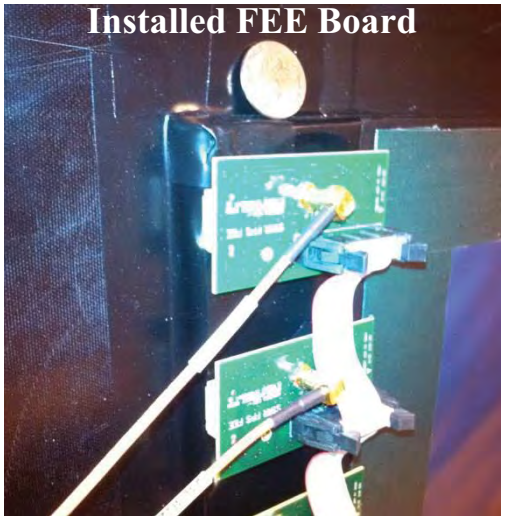

Endcap TOF (eTOF) prototype

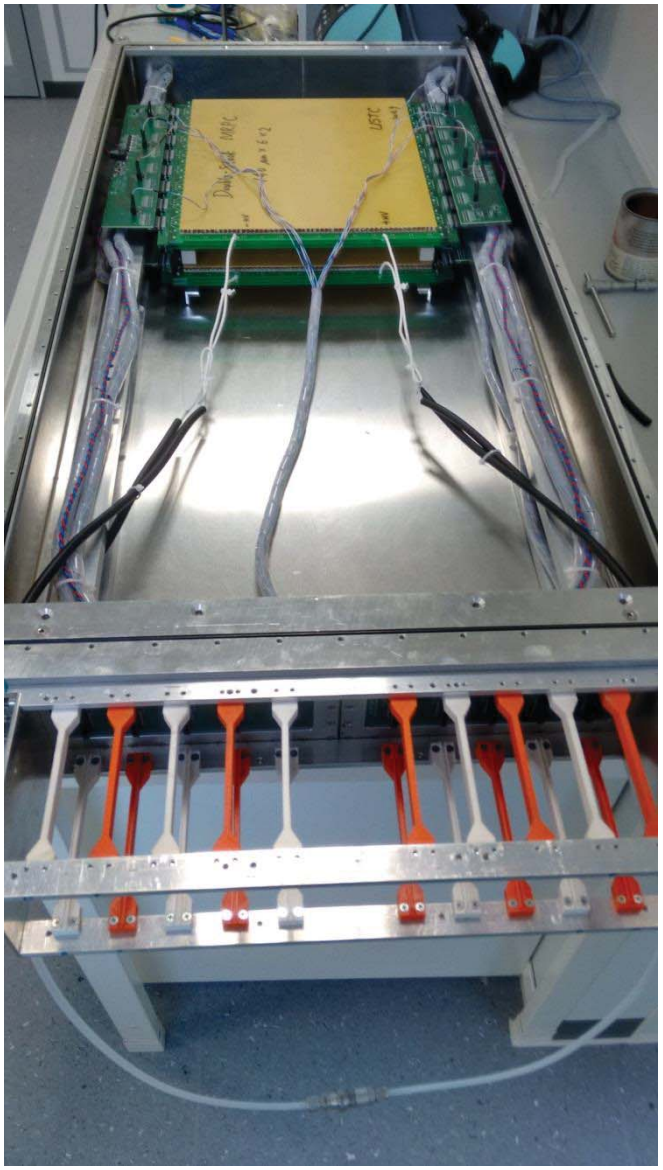

MRPCs are produced at USTC China

Spare channels from the STAR TOF CAEN HV supply provide +/- 6.5 kV over STAR TOF HV cables.

Installation and test of the eTOF module

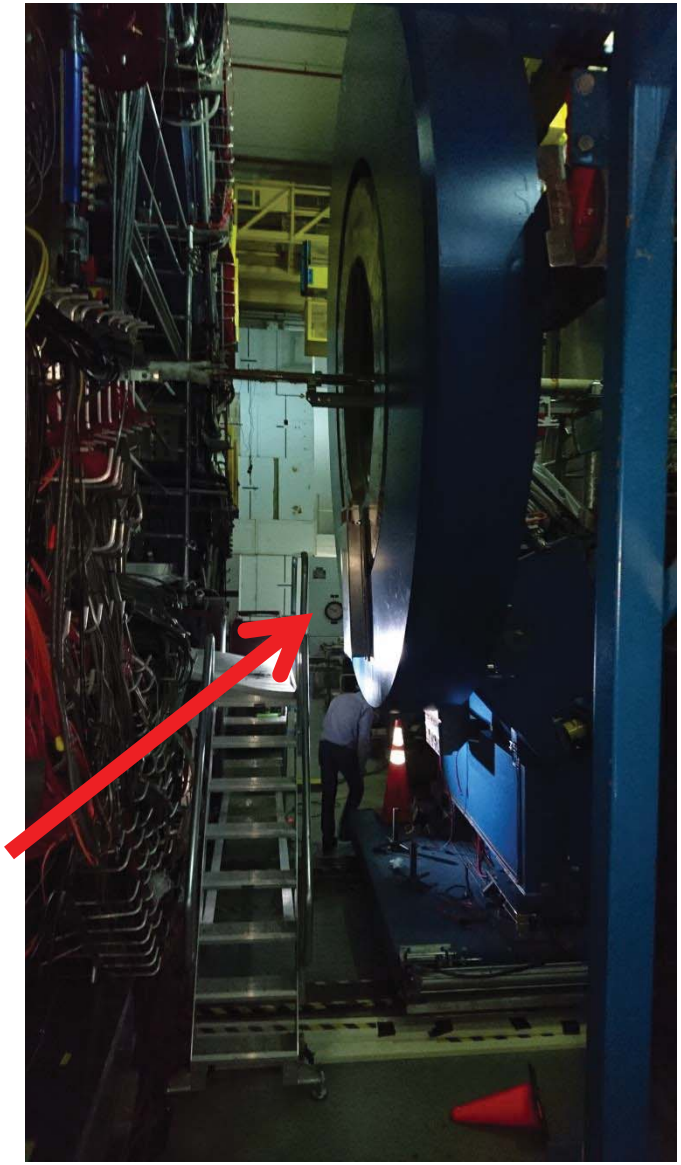

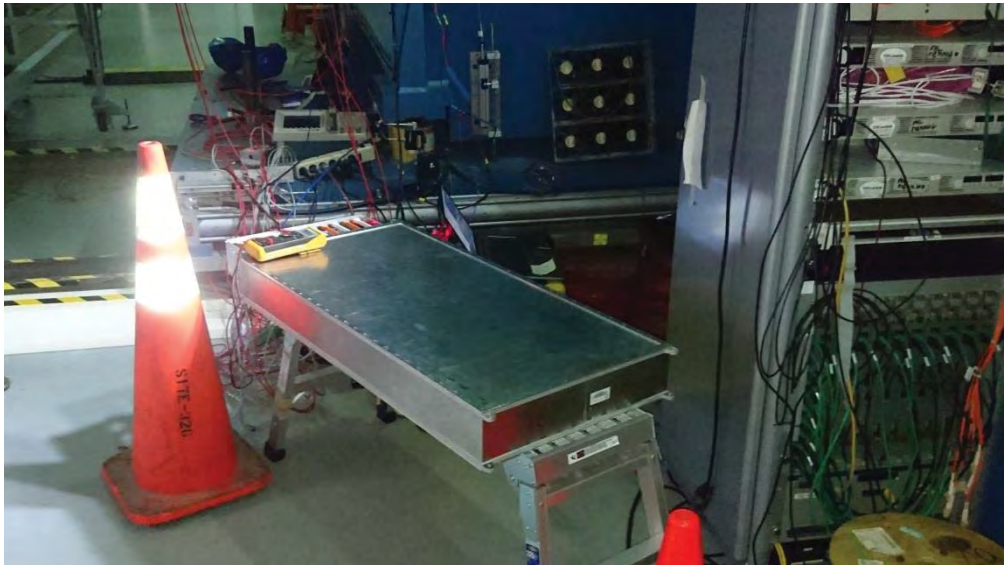

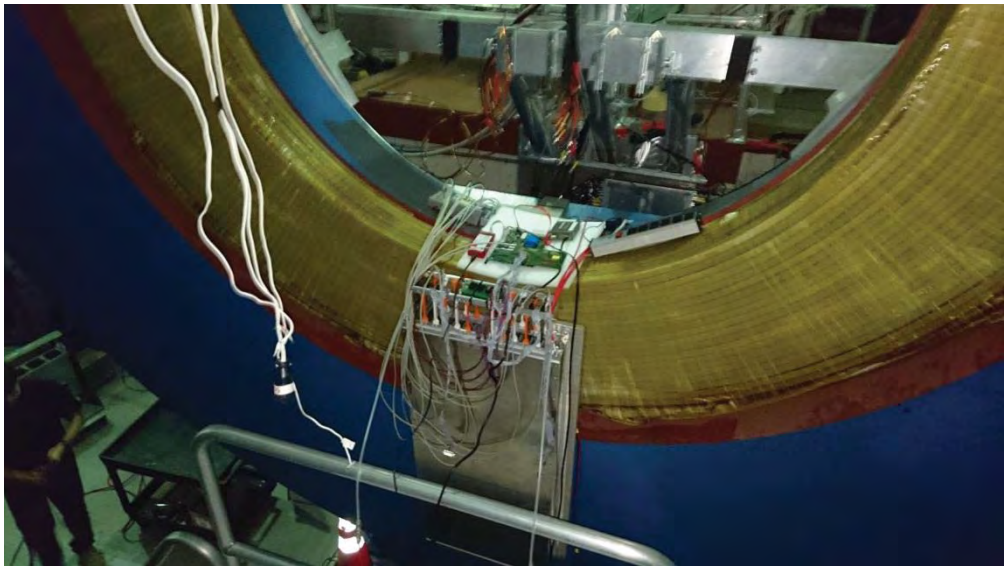

Readout chain for eTOF

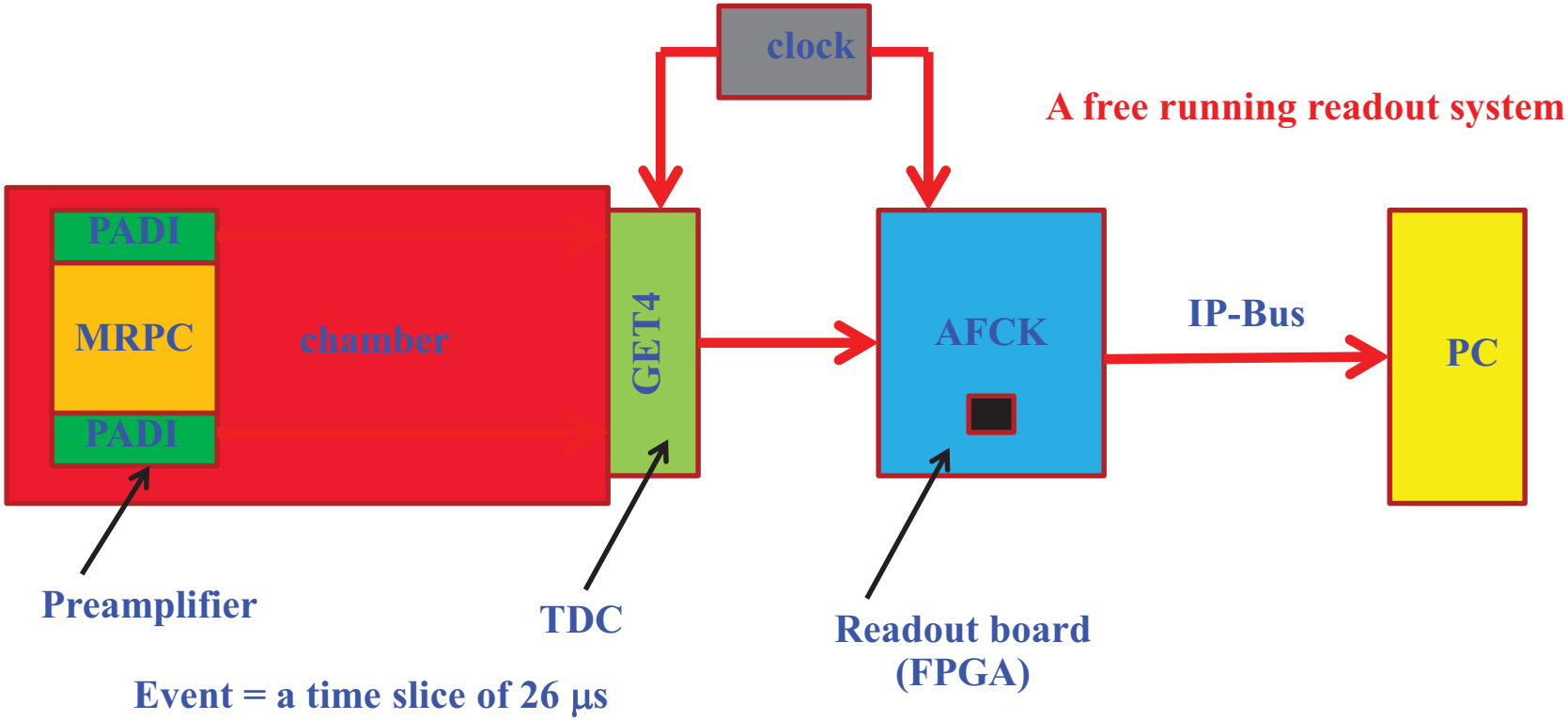

- **eTOF module electronics:**
  - PADI and GET4, draw 5A at 6.5V from a spare STAR TOF Weiner PL512 channel
  - The AFCK draws 1A at 12V
  - The GET4-AFCK copper connection is 6m
  - The AFCK-PC connection is 100m fiber to the DAQ room

RHICf experiment at STAR

- **RHICf EM calorimeter**
  - to be located in front of ZDC during dedicated beam time
  - located in the escape position at present

Idea updated on 15-Sep-2016

FINAL PLAN

Electronics, Power Supply, Frontend PC
(network ports: 5 + few spares)

RHICf detector

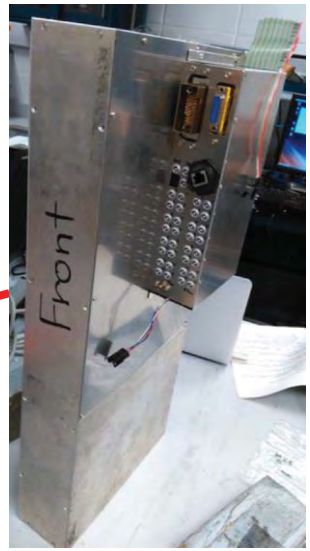

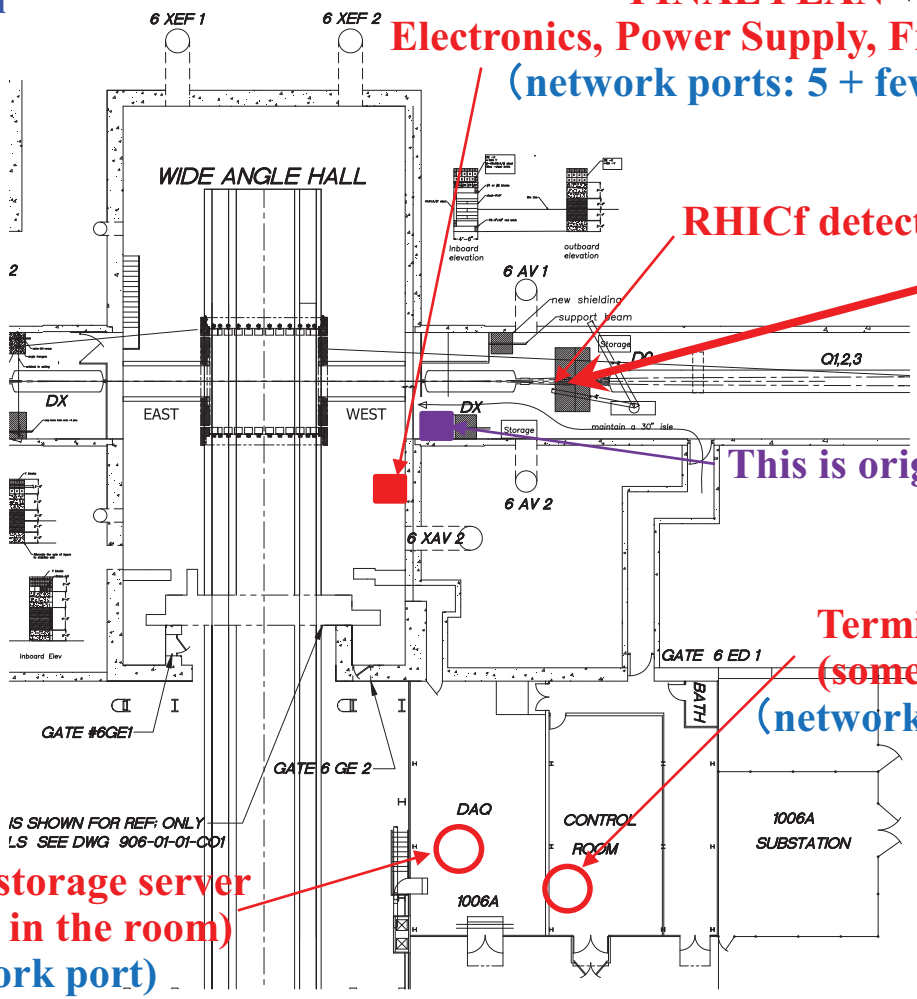

This is original plan

Terminal & analysis PCs
(somewhere in the room)
(network ports: 3 + few spares)

MIDAS and storage server
(somewhere in the room)
(1 network port)

RHICf detector

- 16 layers w/ 2(4)X_0 tungsten, 44 X_0, 1.6 λ_{int}
  - 4 X-Y hodoscope layers,
  - ΔE EM (Had) ~ 5% (40%)
  - Δx EM (Had) < 200 μm (1.2 μμ) @ > 100 GeV
- EM/Had separation
  - π^0 mass reconstruction
  - Reuse of LHCf Arm1 detector
  - Calibrated with SPS beam (and LHC)

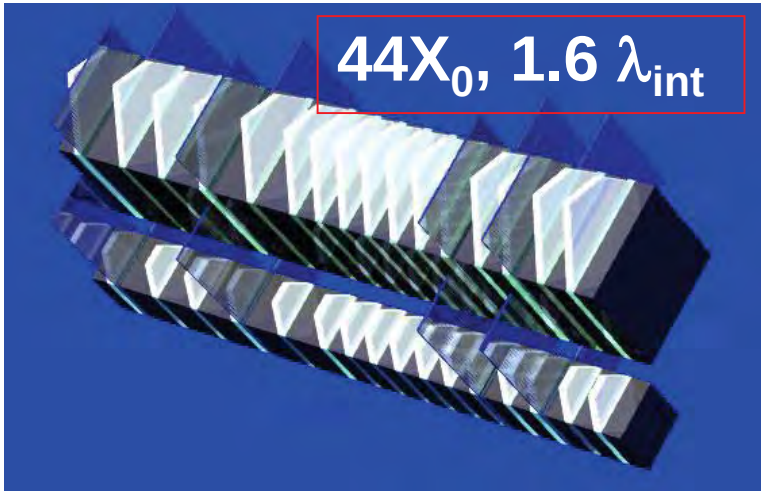

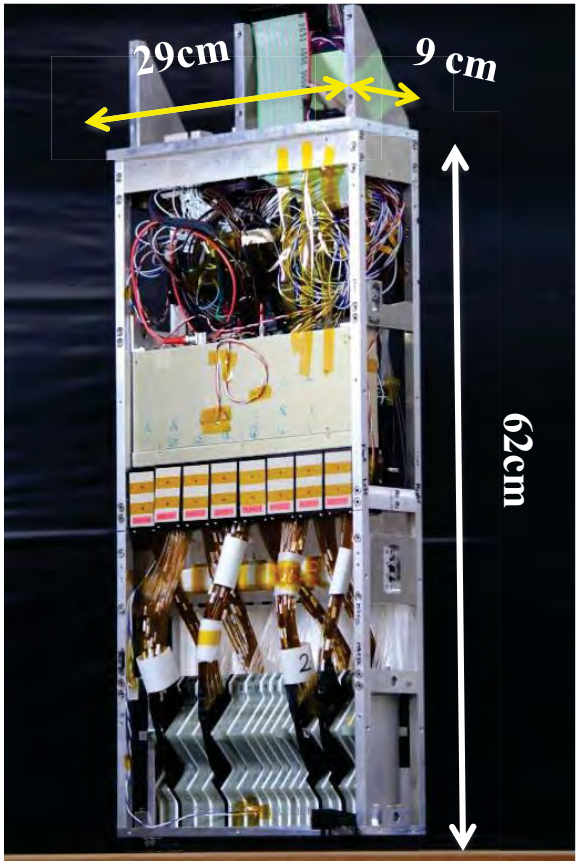

RHICf electronics, power supplies, frontend PC

- **Located in STAR IR area:**
  - CAEN mainframe for PMTs
    - HV A1733N / LV A2517
  - NIM HV supply for MAPMT
  - Kikusui LV supply for booster
  - Keithley 2701 module for thermometer readout
    - Sub-boards 7700 / 7706
  - VME crate for DAQ
    - ADC CAEN V965
    - Discriminator CAEN V814B
    - FPGA board GNV-250
    - TDC CAEN V1290N
    - Level converter CAEN V538
    - FEC receiver CP-80058
    - Band pass filter
- **Cabling from RHICf detector in the tunnel to STAR IR area:**
  - 38 coaxial cables (50Ω) for signal
  - 5 coaxial cables (75Ω) for booster control
  - 3 multi-core power cables for booster/FEC power
  - 2 multi-pair screened cables
  - 2 jacketed twisted pair flat cables for thermometers
  - 1 REDEL HV cable

PP2PP experiment at STAR

electronics racks

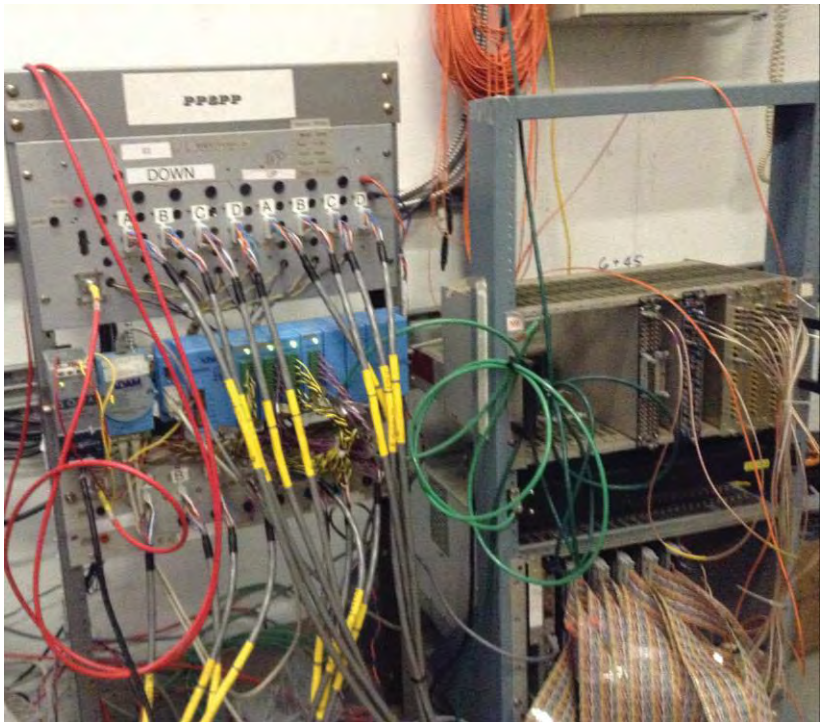

Roman Pot set up

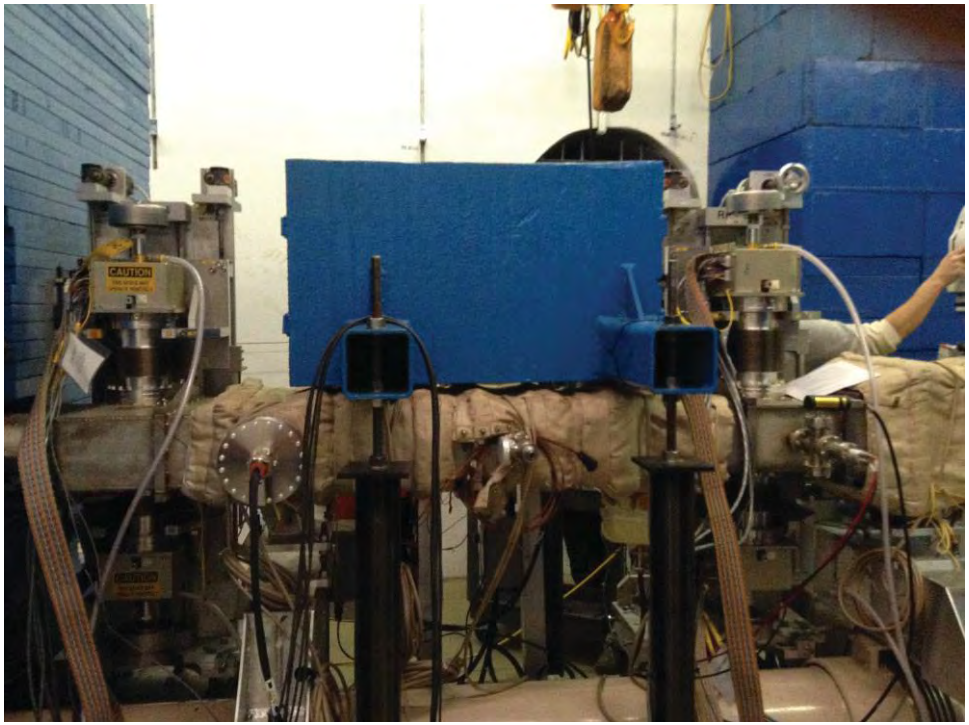

- Set up is the same as in 2009 run, which was previously reviewed
- For 2015 run, set up was moved to DX-D0 area and reviewed again
  - No changes were made except for being in new location => new cable trays, cable routes
- No changes to the set up for 2017 run

Calorimeter R&D in Run 17

STAR/eRHIC Forward Calorimeters

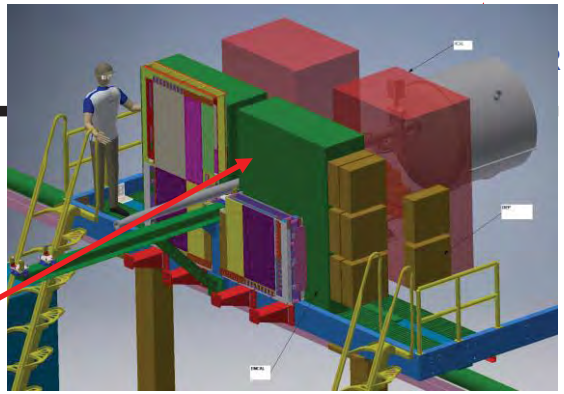

Made of modified PHENIX EMCal Blocks

Continuing EIC R&D from Run 16
Tested SiPMs and APDs as readout sensors

EIC W/ScFi Forward EMCal
16 Channels, triple readout.
PMT, 64 SiPMs + 64 blind SiPMs

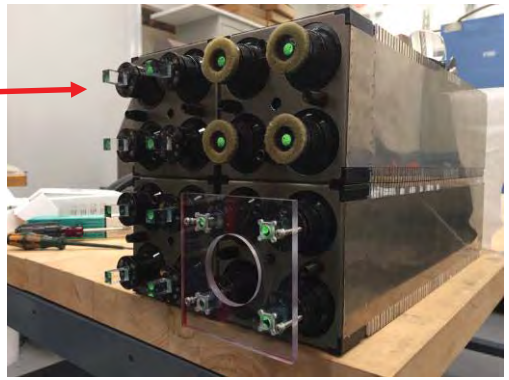

Readout with SiPMs and newly developing DEP

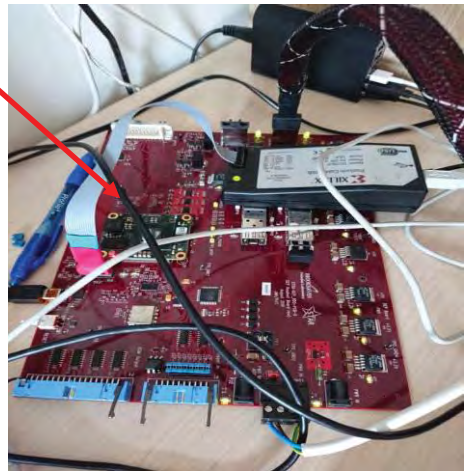

Run 16: ~ 90 extra pixels/GeV caused by 'direct ionization'

Run 17: added set of 'blind' SiPMs to measure 'direct ionization' in SiPMs

Result is critical to decide on readout sensors for future forward HCAL.

Plan for Operations and Shifts (Shift Staffing)

Shift Staffing Plan (No changes, worked well in FY07 - 16 runs)

- **Shift Leader**
- **2 Detector Operators**
- **Run Control/Trigger/On & Offline QA**
  - **Shift term will be 8 days (one day of overlap)**
  - **Shift crew will be stable (i.e. same set of people) for duration of shift term**

Four Person Shift Crews + Trainees

Great Wall of Cybersecurity

STAR Magnet Operation

- **No changes for FY17 Run.**
- **Shift crew always contacts C-AD MCR before changing current in magnet.**

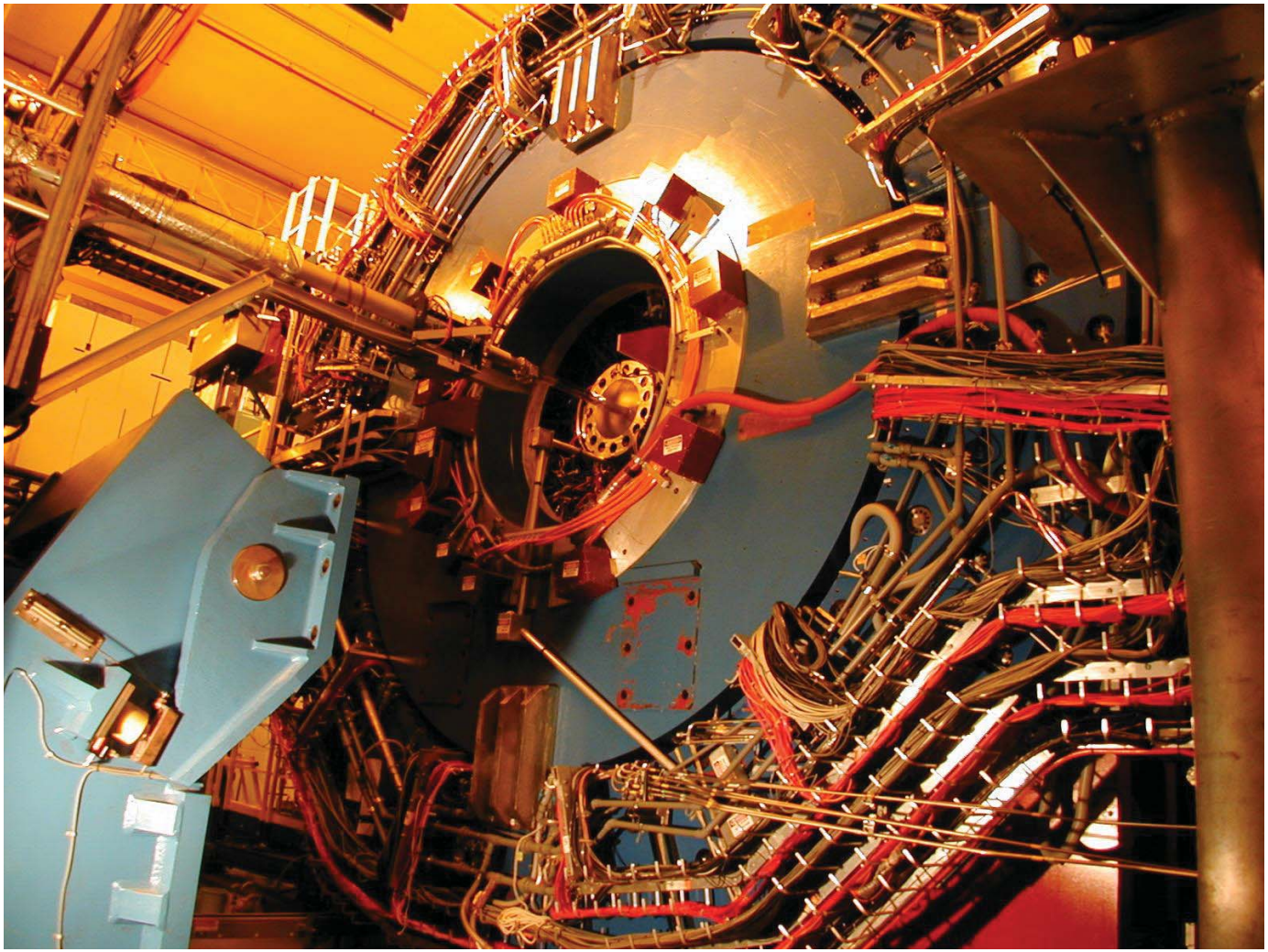

SGIS Interlock System

Select group of people within STAR allowed to authorize bypassing “lower risk” aspects of STAR SGIS protection.

For “higher risk” bypasses (i.e smoke and gas leaks) we have to receive permission from C-AD Operations Coordinator.

In almost all cases, such a request, if necessary, will come from Bill Christie.

Sounding the Alarm

Summary

Biggest changes for STAR for the FY17 Run are:

- FPOST behind FMS
- in situ UV LED curing system for PbGl in FMS
- EPD prototype
- eTOF module test
- RHICf experiment
- further calorimeter R&D for EIC

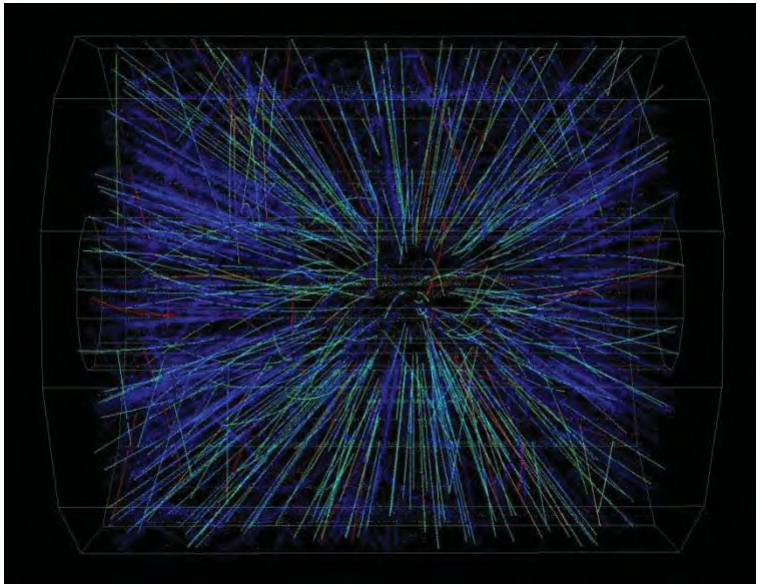

To Do list:

- Installation essentially complete
- Ready to roll

Plan is to start shifts on January 31st, introduce gases into detectors, and take cosmic ray data as we wait for RHIC collisions.