BROOKHAVEN NATIONAL LABORATORY
Associated Universities, Inc.
Upton, New York

EP&S DIVISION TECHNICAL NOTE

No. 77

E. Jablonski

August 15, 1975

SEB INSTRUMENTATION GAS DISTRIBUTION SYSTEM

The SEB gas system is used to continuously flush segmented wire ionization chambers (SWIC's) and loss monitors (LM's) with the gas mixture of 95% Argon + 5% CO_2. The selection of this gas combination was based on the experience of SWIC's operation at FNAL where it was found to produce qualitatively best signals and increase the life of their devices.[1]

Description

The centralized SEB gas distribution system originates at "Mid C" station which is located at the SEB Primary Gate #2. The station consists of two racks of electronic equipment and one rack of gas flow controls. The gas rack is interposed between two batteries of gas bottles, one single bottle and two branches of gas lines. (See Sketch #08045A) The upstream branch caters gas to the A and D target stations, plunging SWIC in the SEB Cave #1 and plunging SWIC in the AGS ring. The line feeds gas also to the Loss Monitor (LM) cable which is laid along the entire periphery of the AGS ring.

The downstream branch of the system supplies gas to a plunging SWIC in Cave #2 and to the fixed SWIC's at the target stations, B, C, B′ and C′. All instruments are identified by a symbol of two letters preceding a three digit number. The first letter (A,B,B′,C,C′ or D) identifies the beam line in which a particular instrument is installed. The second letter "W" stands

1. F. Hornstra , Private Communications.

for SWIC. The three digit number indicates an approximate distance of the instrument measured in feet from the F13 reference point and along the zero degree beam C line. Gas valves are identified in the same manner except those which are designated by the single letter G and three digit number. All such valves are located outside the AGS ring and the SEB caves.

Gas supply lines are made of polypropelene plastic tubing except in the areas of high radiation where copper tubing was used. Gas return lines shown by dotted lines on the sketch are made of polyethylene tubing.

Operation

SEB gas distribution controls incorporate a simple audio-visual automatic alarm system. The alarm is activated whenever the gas bank is depleted of gas. The system operates as follows: Gas pressure P_1 is set at a certain level by means of the pressure regulator PR3 (see Sketch #08075A). Pressure P_2 is adjusted to $P_1 > P_2$ and pressure P_3 to $P_3 < P_2$. Pressure switch PSW is set to close contacts at P_2 pressure and $P_1 + C$ pressure where C is an arbitrary constant that determines the extent of an acceptable overpressure. The low pressure alarm of flashing red light and intermittent buzzing will become activated whenever pressure P_1 drops to P_2 level. When this occurs, reserve gas bottle GB3 will continue to supply gas to the distribution system during the alarm. The alarm will stop when pressure P_1 is restored to its original level. This could be accomplished simply by switching gas banks GB1 or GB2 from empty to full. Higher P_1 pressure will again block the flow of gas from the reserve bottle GB3 until the new gas battery is exhausted of gas. The schematic of electrical controls is shown on the Sketch #08135A.

The system was put into full operation at the end of July 1975 and after eliminating all major leaks, the rate of gas consumption was reduced to approximately 20 psi/day from the bank of 8 bottles.

I would like to acknowledge with thanks, the superb help of Swede Knudsen, Kenny Riker, Charlie Anderson, Artie Scholtz, Jack Haufman and John Schirmer, who in various ways contributed to the success of the system.

EJ:as

Distribution:
Adm. Group
EP&S S&P
J. Haufman
K. Riker
J. Schirmer
A. Scholtz

BY EJ DATE 8-4-75 SUBJECT SEB INSTRUMENTATION
CHKD. BY _____ DATE _____ GAS DISTRIBUTION SYSTEM
DEPT. OR PROJECT _____

SHEET No. _____ OF _____
JOB No EP&S TECH NOTE #77
SK#08045A

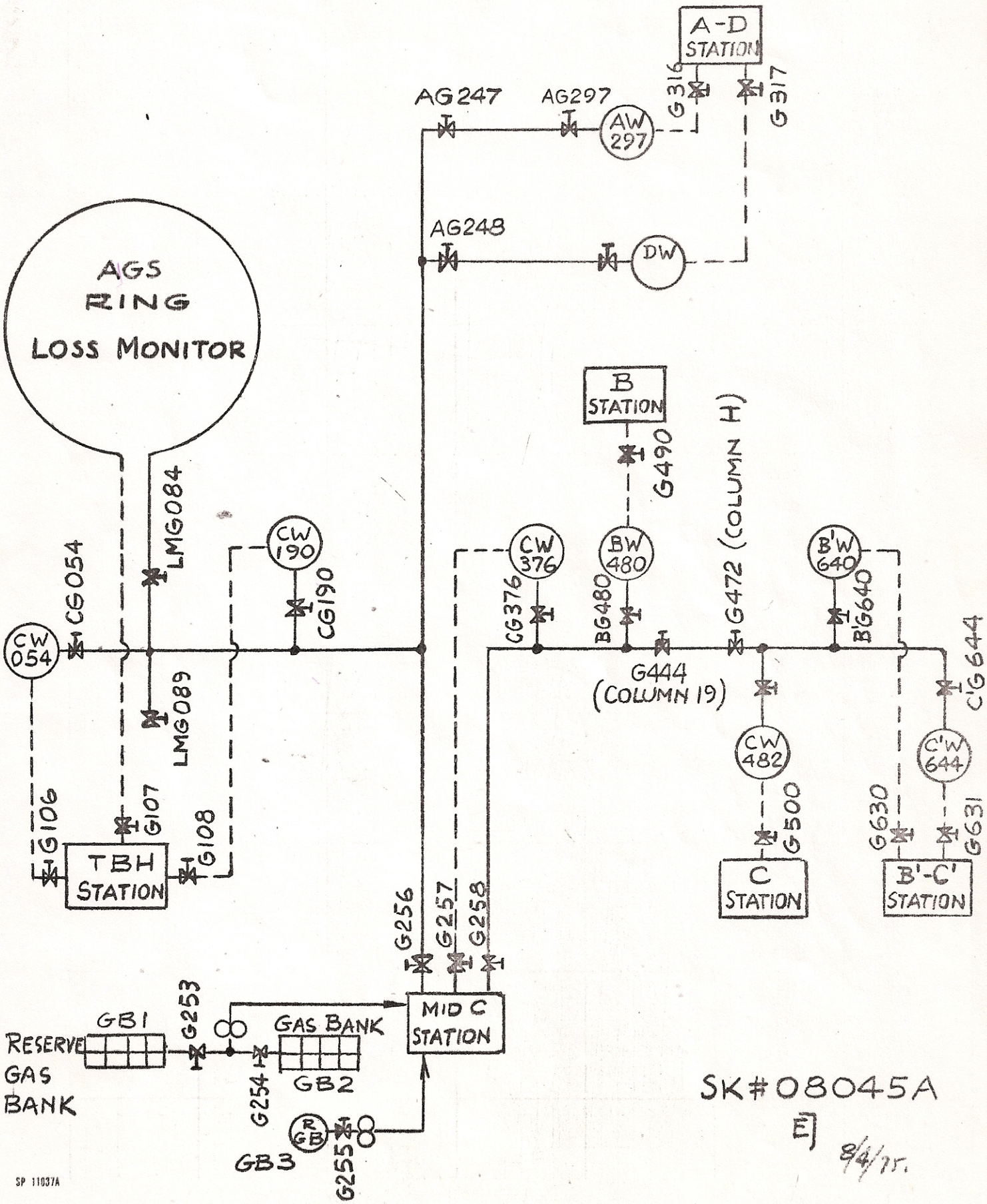

SK#08045A
EJ
8/4/75.

SP 11037A

BROOKHAVEN NATIONAL LABORATORY

BY EJ. DATE 8-7-75 SUBJECT SEB INSTRUMENTATION SHEET NO. ____ OF ____
CHKD. BY ____ DATE ____ GAS DISTRIBUTION SYSTEM JOB NO. #08075A
DEPT. OR PROJECT MID C CONTROL STATION

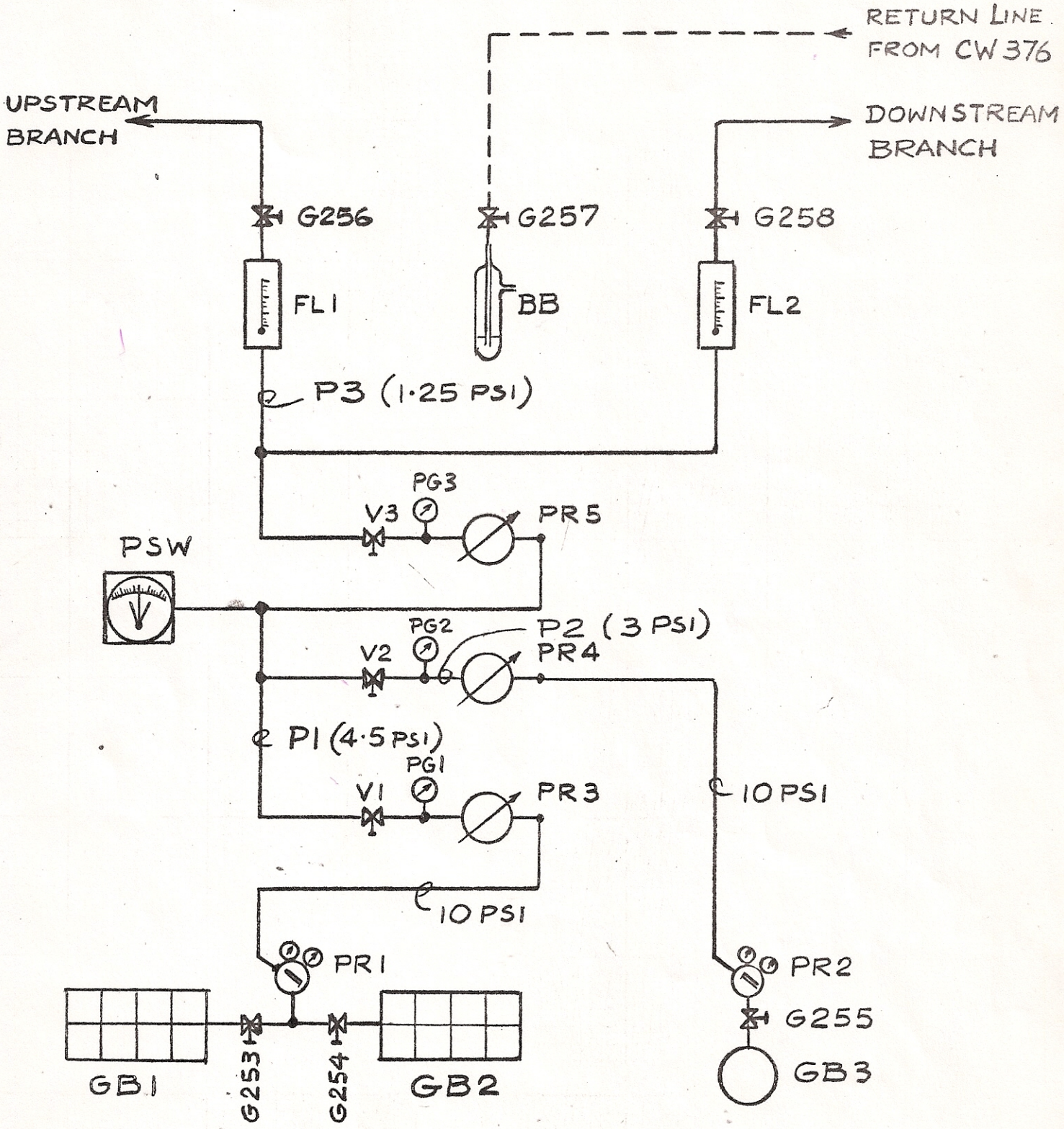

SK #08075A

EJ. 8/7/75.

SP 11037A

BROOKHAVEN NATIONAL LABORATORY

BY E.J. DATE 8/13/75 SUBJECT SEB GAS DISTRIBUTION SYSTEM SHEET No. OF
CHKD. BY DATE JOB No. 08135A
DEPT. OR PROJECT CONTROL SCHEMATIC

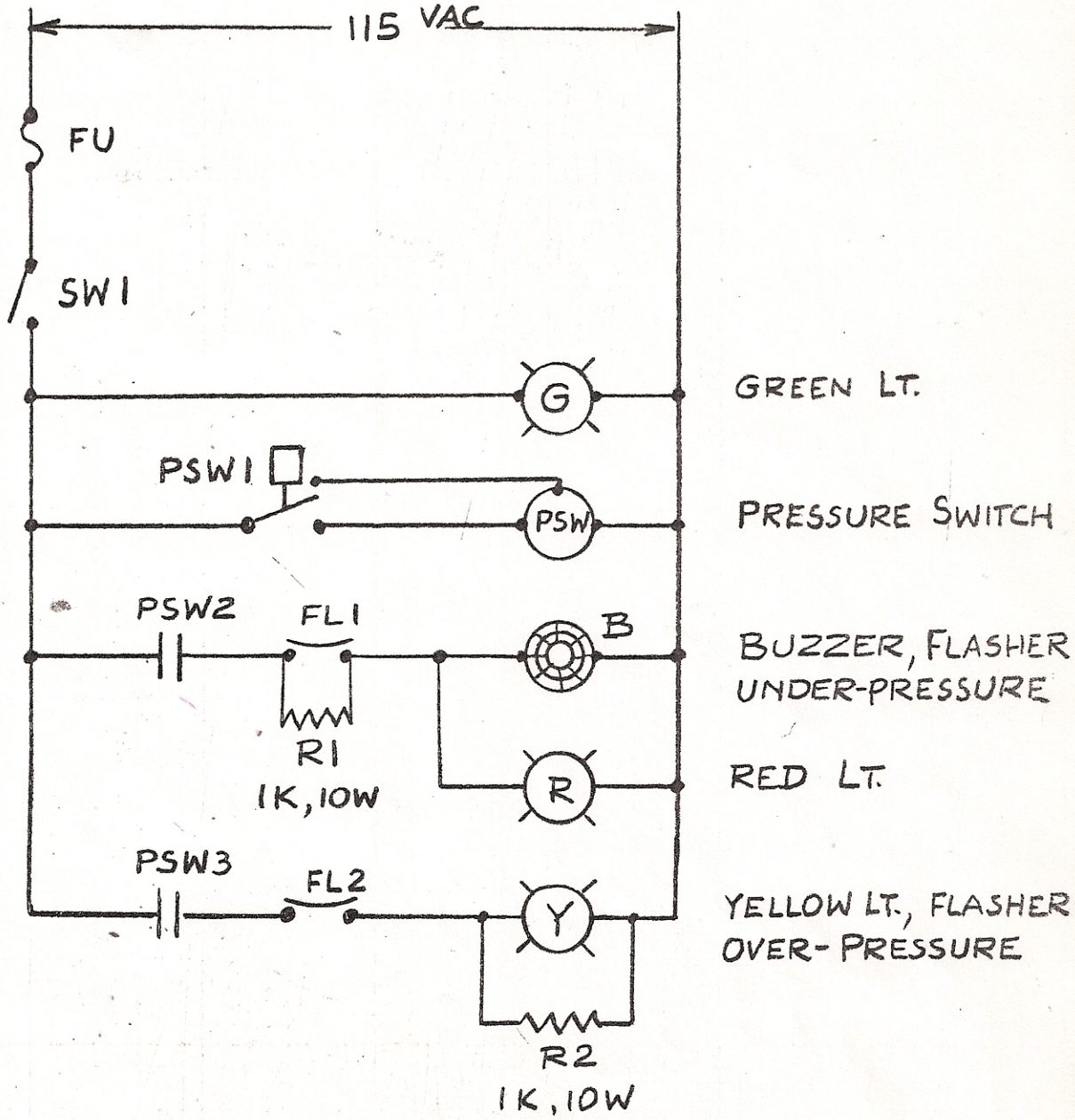

SK.#08135A

E.J. X4735

SP 11037A