BROOKHAVEN NATIONAL LABORATORY
Associated Universities, Inc.
Upton, New York

EP&S DIVISION TECHNICAL NOTE
No. 59

C.T. Murphy

March 28, 1973

MESB Design Notes: I. Tolerances on the Uniformity of $\int B d\ell$ in D1 and D2.

ABSTRACT- It is found that $\int B d\ell$ in D1 must be uniform within 0.2% over a 10-inch region up to 6.6 Gev/c (15.4 KG) and within 0.2% over an 8" region from 6.6 to 9.3 Gev/c (21.8 KG), in order to hold aberrations in the y coordinate at the mass slit to a tolerable level. D2 is less critical since there is a nearby sextupole in the beam to use for correction, if an extra power supply can be found for it.

~~MESB Notes~~

~~Aberrations at mass slit due to D1 + D2~~

Theory

If ~~the~~ $\int B\,dl$ of a bending magnet has a has a quadratic ~~of~~ variation with x (horizontal coordinate):

$$\int B\,dl = A_0\left(1 + \frac{\epsilon x^2}{x_0^2}\right) \qquad (1)$$

where ϵ is the fractional change in $\int B\,dl$ at $x = x_0$, then the fringe focusing in the vertical plane has an x-dependence given by[1]:

$$\frac{1}{f} = \frac{\alpha^2}{L}\left(1 + \frac{2L\epsilon x}{\alpha x_0^2}\right)$$

where α = bend angle (radians), L = length. We care only about the ~~f~~ variation about the central value:

$$\Delta\frac{1}{f} = \alpha\epsilon\frac{2x}{x_0^2} \qquad (2)$$

(For reference, I note that such an aberration can be simulated by a sextupole magnet in various beam programs. In particular, Fox's program ~~Beam~~ BEAM has the sextupole focal lengths in the form

$$\frac{1}{f} = \frac{G}{1313P}2x \qquad \text{(units: kG/inch, inches, GeV/c)}$$

where G is the sextupole "gradient". Since $\alpha = \int B\,dl/1313P$,

(1) M.L. Good, ANL-6611 (1962); C.T. Murphy, U. of Mich. Bubble Chamber Note 42/65 (1965)

where B is the bending ~~ma~~ magnet field,

$$\sigma = \frac{\epsilon}{x_0^2} \int B\,dl \qquad (3)$$

~~Gives~~ gives a relationship between a measured value of ϵ and the input "gradient" value which simulates the effect.)

The variation in f, Eq. (2), induces a variation in $y_b' = dy/dz$ at the bending magnet:

$$\Delta y_b' = y_b \Delta\left(\frac{1}{f}\right)$$

which may be related to the effective target ~~B~~ broadening, Δy_t by

$$\Delta y_t = b \quad \Delta y_b' \qquad (4)$$

where b is the "upper right hand corner" element of the transfer matrix, T_{tb}, from the target to the bending magnet:

$$T_{tb} = \begin{pmatrix} a & b \\ c & d \end{pmatrix}$$

Let y_t' = angle of a ray at the target. Then $y_b = b\,y_t'$. Eq. (4) can then be written in a number of forms:

$$\boxed{\Delta y_t = b^2\, y_t' \,\Delta\left(\frac{1}{f}\right)} = \frac{y_b^2}{y_t'}\,\Delta\left(\frac{1}{f}\right) = b\, y_b\, \Delta\left(\frac{1}{f}\right) \qquad (5)$$

This may be related to the broadening at the mass slit (the first focus), Δy_m, and the slope at the mass slit, y_m', by multiplying by the magnification (and note $y_m' = y_t'/m_v$):

$$\boxed{\Delta y_m = b^2 m_v^2 \, y_m' \, \frac{\alpha \epsilon \, 2x_b}{x_0^2}} \qquad (6)$$

Summarizing the notation, Δy_m is the change of position of a ray at the mass slit which has slope y_m' and which passed through the bending magnet at x_b; b is the transfer matrix element defined in Eq. (4); m_v is the magnification, y_z / y_m; α is the bend angle (radians); x_0 is the position in the bending magnet where $\int B dl$ differs by the fraction ϵ from its central value.

<u>Data and examples</u>

Table I shows input data for Eq. (6) for 5 modes of MESB. The value of $x_{b\,max}$ <u>includes half of the total sagitta (1.4")</u> of the beam in D1 and D2. The bend angle, α, is $8° = 0.14$ rad in all cases. The K-π separation listed for each mode is the separation at the nominal momentum limit of that mode, i.e., the momentum at which the K-π separation is twice the geometrical image width (except mode 4W, where the ratio is 1.5). (These momenta are 4, 6, and 6.6 GeV/c for modes 1, 3, and 4, respectively.) Values of $(\Delta y_m)_{max}$ are listed under the assumption that $\epsilon = 0.2\%$ at $x_0 = 5''$, an apparently arbitrary case. In fact, this ~~represents~~ case is the maximum tolerable non-uniformity in D1, as will be

shown in the next section. The ratio of $(\Delta y_m)_{max}$ to the K-π separation is also listed and is 0.8 for mode 4W and slightly less for other modes, ~~Thus mode 1W is the mode most sensitive to~~ considering only D1.

The same ratio is usually considerably smaller for D2. ~~Further~~ Furthermore, D2 has a nearby sextupole magnet which can be used to correct the aberration. Therefore D2 is of no concern, unless it has aberrations ~~which are very large in~~ which are of higher order than sextupole and are very large.

A criterion for maximum allowable non-uniformity in D1

As can be seen from Eq. (6), the non-uniformity of D1 will produce a phase space plot for pions at the mass slit which has the qualitative appearance of Fig. 1 (ignoring all other aberrations).

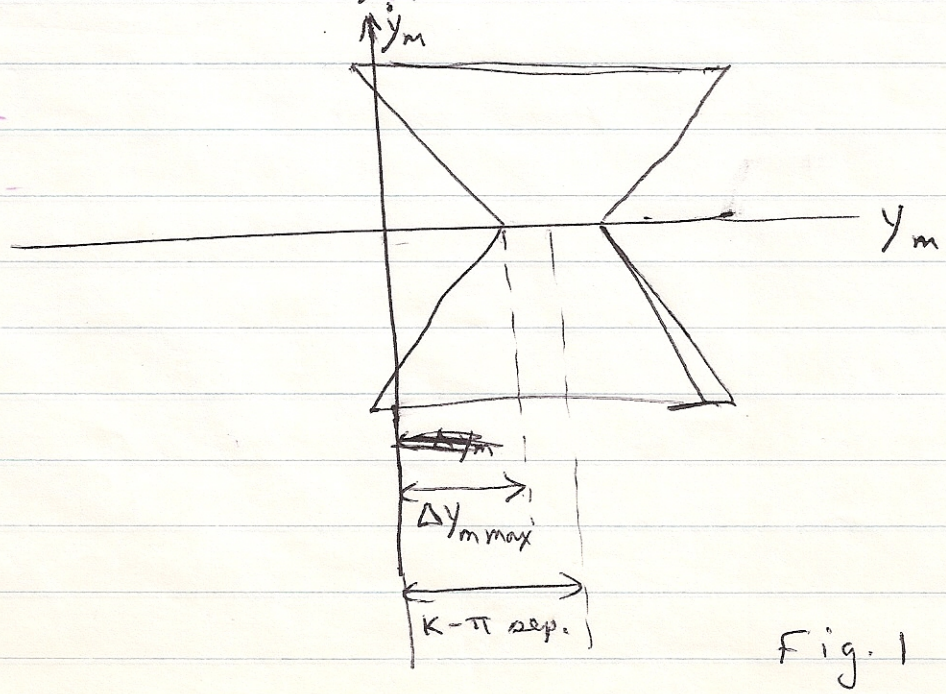

(this fig. is in the text.)

Fig. 1

~~This ~~ape~~ shape is reminiscent of ~~the shape~~ that of the chromatic aberration~~

This shape is qualitatively the same as that ~~as~~ shown in Fig. 15 of EP&S 72-1, a shape which results from the unremovable chromatic aberrations. The mass slit has been shaped to as to ~~roughll~~ roughly cover this shape (see separate report). Thus a reasonable criterion for the maximum acceptable non-uniformity in D1 seems to be that the aberration be no worse than ~~chrom~~ the chromatic aberration. Comparing Δy_{max} (line 8, Table I) with Δy_{max}, chromatic (line 4) we see that the criterion is met for mode 3 and slightly exceeded for modes 1 and 4. To be more exact, I display in Figs. 2 and 3 the actual phase space plots for modes 1E and 4W. Fig. (a) shows the shape derived from the Monte Carlo in BEAM, including chromatic aberration but assumed no aberration from D1. In the Monte Carlo, a 4" target was assumed; the momentum bites were 3% for mode 1 and 1½% for mode 4. The effective shape of the mass slit is shown as a dotted line (assuming that the mass slit is 40" long and has a slope of 0.6 mrad). Fig. (b) shows the phase space derived from Eq. (6) with $\epsilon = 0.2\%$ & $x_0 = 5''$, i.e., resulting from D1 aberrations alone. The mass slit is supposed to

intercept any pion to the right of the dotted line. We see that Mode 1E is predicted to have some leak through. However, these hand-calculated phase spaces cannot be taken literally, since chromatic effects and clipping by collimators has been ignored. Hence Monte Carlos were run with a sextupole added at the end of D1, with G given by Eq. (3) ($\epsilon = 0.2\%$, $x_0 = 5''$). The resulting phase space plots (computer print out) are shown in Fig. 4; both chromatic and D1 aberrations are now correctly included. The number of ~~particles~~ π's which leak thru the mass slit is ~~≈~~ 1% or less.

Details: Momentum dependence and the ~~sg~~ sagitta question

The criterion that $\epsilon = 0.2\%$ at $\pm 5''$ is dictated by modes 1 and 4. Mode 1 is supposed ~~to work up to 6 GeV ($\bar{p}$'s)~~ to separate $\bar{p}$'s up to 6 GeV/c; Mode 4 is supposed to make a cleaner K beam at 6 GeV/c (with a loss of flux), or perhaps can be used to extend the momentum limit for K^- to 6.6 GeV/c. (15.4 kG).

Above 6.6 GeV/c, neither mode 1 nor mode 4 will be used to separate masses. Mode 3 will be adequate to seperate π^+ from p up to the momentum limit of 9.3 GeV/c. If anybody tries to separate $\bar{p}$ from π^- at 9 GeV/c, the loss of flux caused by switching to mode 4 is intollerable.

Thus we can demand that above 6.6 GeV/c, the D1 non-uniformity must satisfy mode 3, which has a looser tolerance (see Table I). For equal chromatic and D1 aberrations, one can allow $\epsilon \leq 0.32\%$ at $x_0 = 5''$; since only $\pm 4''$ are used in mode 3, this criterion is better stated as $\epsilon \leq 0.20\%$ at $x_0 = \pm 4''$.

~~If these criteria cannot be met without the addition of pole face windings~~

The ~~situation~~ phase space plots under this condition for mode 3W are shown in Figs. 5(a) ~~from~~ (Monte Carlo, no D1 aberration), ~~and~~ 5(b) (hand calculation of aberrated D1), and 6 (Monte Carlo including chromatic and D1 aberrations).

The maximum x-values assumed included and extn 0.7" in all modes, corresponding to the half sagitta of the path of the particle through D1. If a curved $\int B dl$ coil is used, or if a model can be used to calculate $\int B dl$ along curved paths, the tolerances are loosened slightly: at 6.6 GeV/c, $\epsilon \leq .18\%$ at $x = \pm 4.5''$; at 9.3 GeV/c, $\epsilon \leq .18\%$ at $x_0 = \pm 3.5''$.

If these tolerances cannot be achieved without the addition of pole face windings, it would of course be desirable to design the windings to achieve ~~a~~ ϵ values about one-half as large as those stated above

Distribution: Admin. Staff
D. Berley
H. Foelsche
Y.Y. Lee
C. T. Murphy
R. Rubinstien
E. Willen

Table I - Aberations from non-uniformities in $\int B dl$ for D1 + D2

	Mode				
	1W (MPS)	1E	3W	3E	4W
m_v	2.13	2.41	0.62	0.61	1.00
y'_m max	1.8 mr	1.6	1.9	1.9	1.2
K-π separation	0.17"	0.19"	0.049"	0.049"	0.060"
Δy_{max}, chromatic	0.09"	0.71	0.040	0.042	0.040
At D1:					
b	340"	325	645	620	645
x_{max} {includes ½ sagitta}	5.3"	5.2	4.2	4.0	4.1
$(\Delta y_m x_0^2/\epsilon)$ max *	1400 in³	1440	320	305	540
Δy_m max	0.11"	0.12	0.025	0.024	0.044
Δy_m max / K-π sep.	0.65	0.64	0.51	0.49	0.73
At D2:					
b	200"	163"	520	645	372
x_{max}	4.7"	3.7	3.3	1.8	2.3
$(\Delta y_m x_0^2/\epsilon)$ max *	1500 in³	260	175	190	105
Δy_m max	0.12"	0.02"	0.014	.008	.0085
Δy_m max / K-π sep.	0.70	.10	.29	.16	.14

* if $\epsilon = \frac{1}{5}\%$ at $x_0 = .5"$

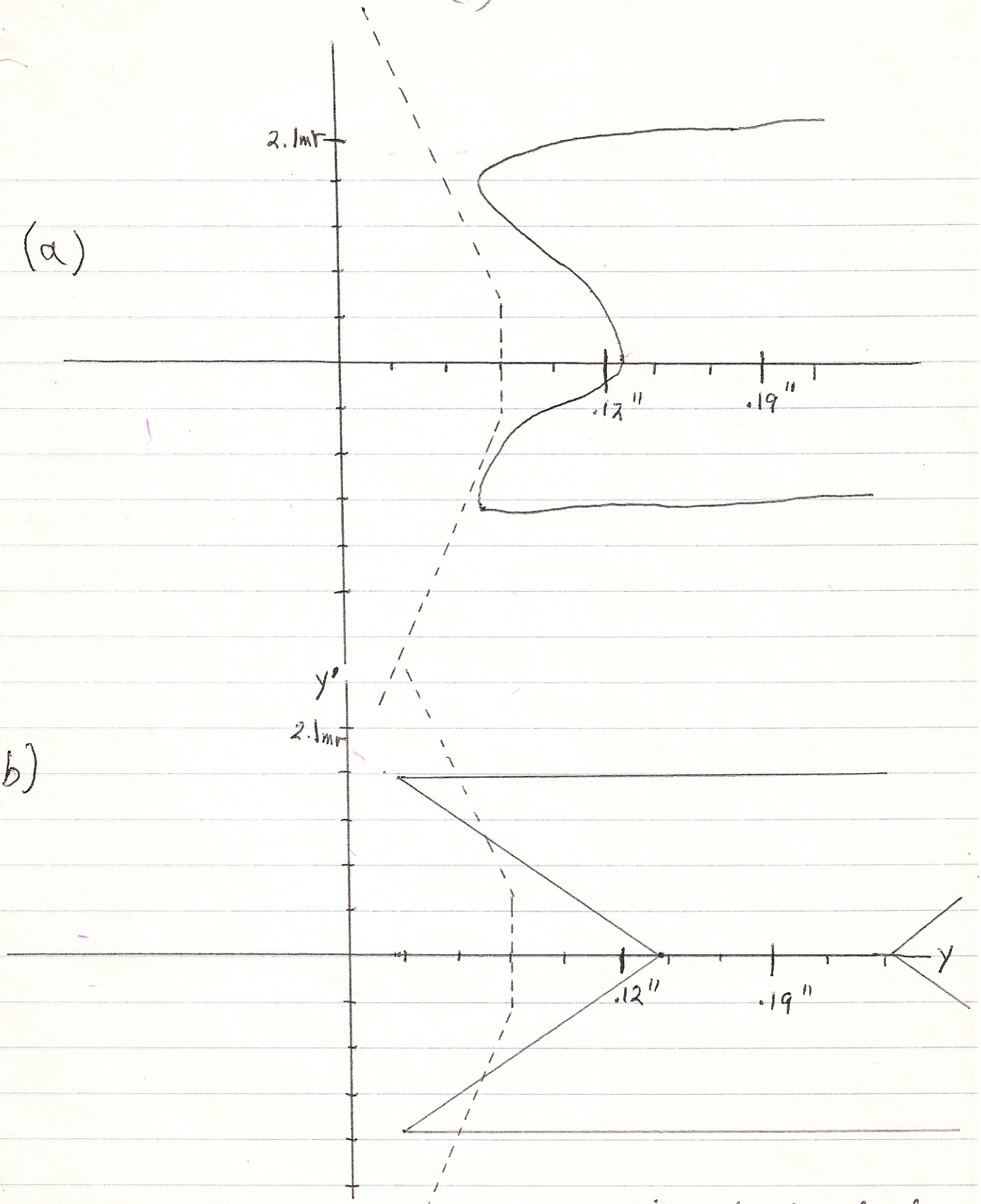

Fig.2 – Model E phase spaces, and mass slit projection at the mass slit.

(a)

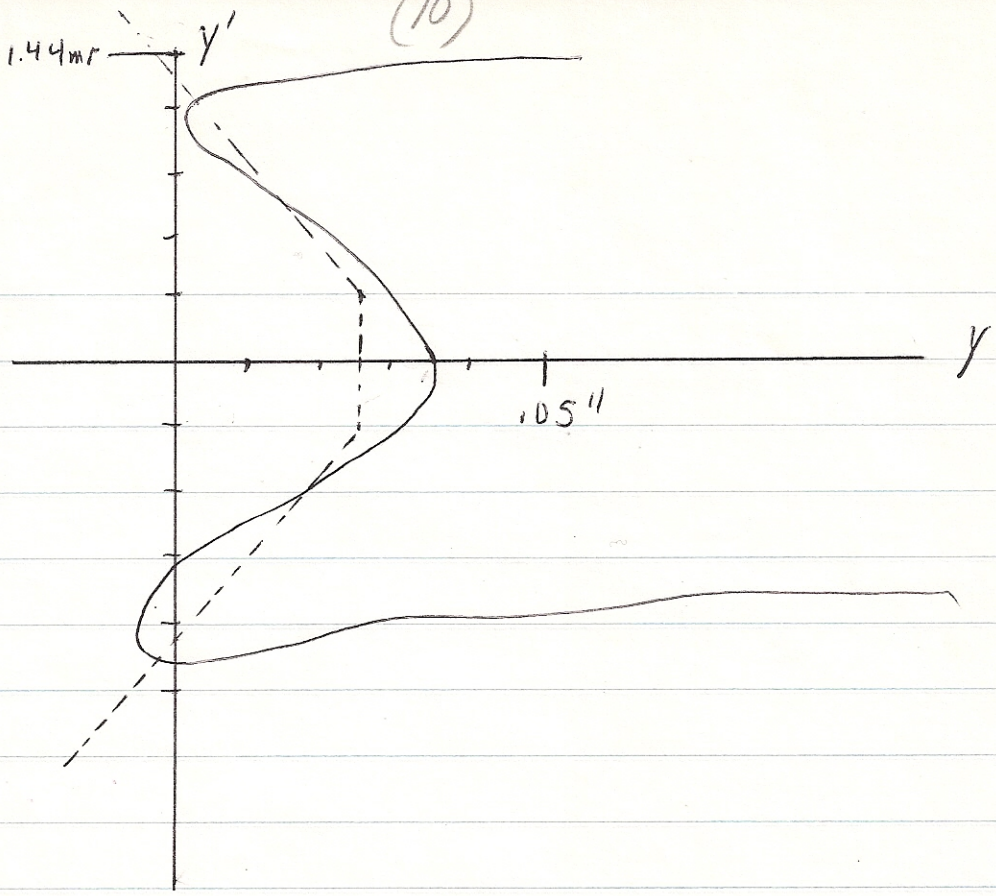

(b)

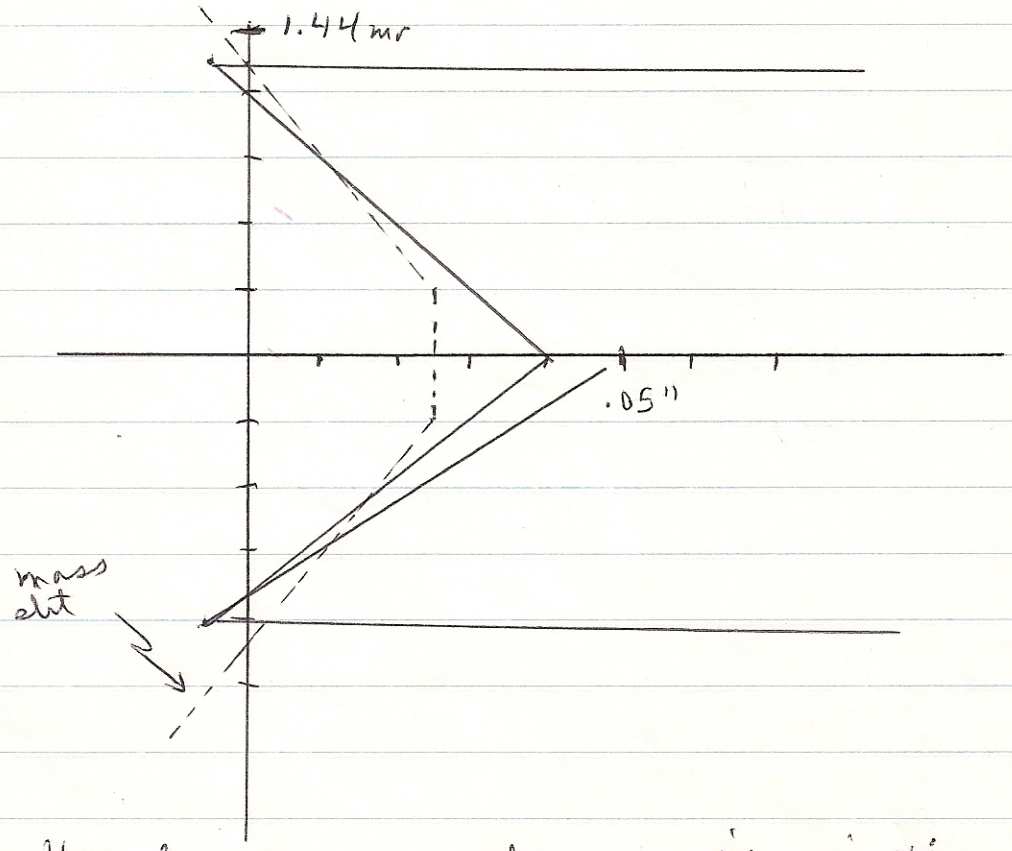

Fig. 3 – Mode 4 W phase spaces and mass slit projections

Mode E 1

(11)

	XMAX	DXMAX	YMAX	DYMAX	K1	K2	K3	K4	X1	DX1	Y1	DY1
ASS	4.00000	.10000	.23769	.00228	3	5	3	4	.001	.02000	.020	.00380

0	0	0	0	0	0	0	0	0	0	0	0	0	0	0	0	0	0	
0	0	0	0	0	0	0	0	0	0	0	0	0	1	1	0	0	2	
0	0	0	0	0	0	0	0	0	0	0	2	2	11	2	0	0	17	
0	0	0	0	0	0	0	0	0	1	2	4	9	6	6	1	2	31	
0	0	0	0	0	0	0	0	0	1	5	7	12	16	9	12	1	63	
0	0	0	0	0	0	0	0	0	2	8	8	19	19	16	5	4	81	
0	0	0	0	0	0	0	0	1	4	9	8	28	23	26	15	3	117	
0	0	0	0	0	0	1	0	1	6	10	14	19	27	32	20	8	138	
0	0	0	0	0	0	0	2	1	3	4	13	16	27	24	28	23	141	
0	0	0	0	0	0	0	1	1	3	7	8	21	25	36	27	16	145	
0	0	0	0	0	0	0	0	0	1	1	3	10	28	24	23	34	124	
0	0	0	0	0	0	0	0	0	0	3	2	6	26	22	20	27	106	
0	0	0	0	0	0	0	0	0	0	1	3	7	20	29	40	26	126	
0	0	0	0	0	0	0	0	0	0	0	0	2	11	18	31	30	92	
0	0	0	0	0	0	0	0	0	0	0	0	4	6	19	16	30	75	
0	0	0	0	0	0	0	0	1	0	1	1	1	8	15	18	11	56	
0	0	0	0	0	0	0	0	0	1	4	2	4	5	8	9	6	39	
0	0	0	0	0	0	0	0	0	0	4	0	3	2	3	6	4	22	
0	0	0	0	0	0	0	0	0	0	2	3	1	1	1	0	1	9	
0	0	0	0	0	0	0	0	0	0	0	0	0	0	0	0	0	0	
0	0	0	0	0	0	1	3	5	22	61	78	164	262	291	271	226		.888 = UP/TOTAL
0	0	0	0	0	0	0	0	0	0	0	0	0	3	1	2	1	7	
0	0	0	0	0	0	0	0	0	2	4	5	8	6	7	2	3	37	
0	0	0	0	0	0	0	1	0	6	9	9	7	7	13	4	8	64	
0	0	0	0	0	0	1	2	0	6	6	15	19	23	19	12	15	118	
0	0	0	0	0	0	0	0	3	4	10	13	14	15	20	19	11	109	
0	0	0	0	0	0	0	0	1	1	6	6	17	25	26	23	17	122	
0	0	0	0	0	0	0	0	0	0	1	4	8	26	35	21	9	104	
0	0	0	0	0	0	0	0	0	0	0	3	19	29	31	27	21	130	
0	0	0	0	0	0	0	0	0	0	0	0	12	31	26	29	20	118	
0	0	0	0	0	0	0	0	0	0	0	0	5	15	23	27	34	104	
0	0	0	0	0	0	0	0	0	0	0	0	13	17	25	28	22	105	
0	0	0	0	0	0	0	0	0	0	4	5	11	23	20	32	26	121	
0	0	0	0	0	0	0	0	0	1	6	3	9	13	19	21	14	86	
0	0	0	0	0	0	0	0	0	0	6	5	9	14	16	10	16	76	
0	0	0	0	0	0	0	0	1	1	4	4	7	7	8	9	8	49	
0	0	0	0	0	0	0	0	0	1	2	4	4	8	2	5	0	26	
0	0	0	0	0	0	0	0	0	0	3	2	2	0	0	0	0	7	
0	0	0	0	0	0	0	0	0	0	0	0	0	0	0	0	0	0	
0	0	0	0	0	0	0	0	0	0	0	0	0	0	0	0	0	0	
0	0	0	0	0	0	0	0	0	0	0	0	0	0	0	0	0	0	
0	0	0	0	0	0	1	3	5	22	61	78	164	262	291	271	225		.888 = UP/TOTAL

.3 - % leak thru

L93 (CENTRAL RAY Y)/WAIST= 1.125 YMAX,YMIN= .313 .120 YMIN/GEOM,IMAGE HT =
TO MASS= .370 NTHIT= 3192 KILLK= 334 NK= 1474 KOUT/KIN= .815 NPI= 900

TR	0	9	22	39	56	75	92	126	106	124	145	141	138	117	81	63

AM

	Q2		D1	SEXD	DRF1	Q3	ENTR		SEP1	WALL	STOP	SEP2	EXIT
0	0	0	0	0	0	16	84	0	7	16	165	70	403
	SEX1		PLIM		SEX2	DRF4	D2	DD2		Q6		MASS	
	0	0	1250	0	0	31	0	0	415	45	0	425	

MESB, MODE E1 ** 1 ** **SMALL BENDS, DATE= 03/28/73

Fig. 4 (a)

(12)

'S	JPRINT		XMAX	DXMAX	YMAX	DYMAX	K1	K2	K3	K4	X1	DX1	Y1
MASS	MASS	4.00000	.10000	.09975	.00144	3	5	3	4	.001	.02000	.020	

0	0	0	0	0	0	0	0	0	0	1	0	1	1	0	3	1	1	0	8
0	0	0	0	0	0	0	1	1	1	2	2	2	4	4	5	4	2	3	31
0	0	0	0	0	0	0	0	0	0	4	2	5	12	9	10	6	2	6	56
0	0	0	0	0	0	0	0	0	2	0	9	7	12	21	13	12	7	4	87
0	0	0	0	0	0	0	0	0	0	3	2	15	24	21	23	25	10	7	130
0	0	0	0	0	0	0	0	0	1	2	4	13	24	45	19	17	9	7	141
0	0	0	0	0	0	0	0	1	3	0	7	18	36	44	40	24	10	10	193
0	0	0	0	0	0	0	0	1	0	4	7	18	41	50	39	31	16	2	209
0	0	0	0	0	0	0	0	0	1	2	8	17	37	41	37	41	21	14	219
0	0	0	0	0	0	0	1	0	3	7	7	19	27	58	47	41	23	11	244
0	0	0	0	0	0	0	0	1	1	4	4	13	34	46	46	37	22	11	219
0	0	0	0	0	0	0	1	0	2	0	5	15	30	38	42	38	25	12	208
0	0	0	0	0	0	0	0	1	0	2	5	19	27	52	35	36	27	7	211
0	0	0	0	0	0	0	0	1	1	1	2	10	25	33	35	26	14	6	154
0	0	0	0	0	0	0	0	0	0	3	2	13	16	30	35	30	19	7	155
0	0	0	0	0	0	0	0	0	2	2	3	6	19	21	24	18	20	6	121
0	0	0	0	0	0	0	0	0	1	1	3	2	13	17	15	19	8	3	82
0	0	0	0	0	0	0	0	0	0	1	1	4	10	14	9	10	10	5	64
0	0	0	0	0	0	0	0	0	0	1	0	1	8	5	7	2	1	3	28
0	0	0	0	0	0	0	0	0	0	0	0	1	3	0	0	1	1	0	6
0	0	0	0	0	0	0	3	6	18	40	73	199	403	549	484	419	248	124	.611 =

0	0	0	0	0	0	0	0	0	0	0	0	0	0	0	0	0	0	0	0
0	0	0	0	0	0	0	0	0	1	1	2	5	2	5	7	5	9	4	41
0	0	0	0	0	0	0	1	1	4	4	9	20	19	31	18	18	15	8	148
0	0	0	0	0	0	0	0	0	3	6	12	8	20	24	25	19	19	18	154
0	0	0	0	0	0	0	0	1	3	4	7	13	23	35	13	16	11	11	137
0	0	0	0	0	0	0	0	0	0	4	9	22	25	39	25	29	24	9	186
0	0	0	0	0	0	0	0	0	0	1	5	16	24	40	21	27	13	8	155
0	0	0	0	0	0	0	0	0	0	0	9	13	30	39	35	33	18	2	172
0	0	0	0	0	0	0	0	0	0	0	0	10	29	41	45	37	10	0	172
0	0	0	0	0	0	0	0	0	0	0	0	4	49	37	35	48	8	0	181
0	0	0	0	0	0	0	0	0	0	0	0	3	41	35	48	36	8	0	171
0	0	0	0	0	0	0	0	0	0	0	0	6	28	40	42	36	10	2	164
0	0	0	0	0	0	0	0	0	0	0	1	12	21	62	44	27	15	9	191
0	0	0	0	0	0	0	0	0	0	1	5	10	26	33	33	23	24	7	162
0	0	0	0	0	0	0	0	0	1	4	7	19	16	22	36	26	20	11	162
0	0	0	0	0	0	0	0	0	1	4	6	16	21	32	21	24	19	14	158
0	0	0	0	0	0	0	0	1	4	8	6	14	19	24	27	13	19	18	153
0	0	0	0	0	0	0	1	3	1	3	2	8	10	10	9	2	6	3	58
0	0	0	0	0	0	0	1	0	0	0	0	0	0	0	0	0	0	0	1
0	0	0	0	0	0	0	0	0	0	0	0	0	0	0	0	0	0	0	0
0	0	0	0	0	0	0	3	6	18	40	73	199	403	549	484	419	248	124	.507 =

1% leak thru

= .048 (CENTRAL RAY Y)/WAIST= 1.253 YMAX,YMIN= .085 .036 YMIN/GEOM,IN
MISSION TO MASS= .540 NTHIT= 2345 KILLK= 1291 NK= 1364 KOUT/KIN= .514 NPI= 6700
TUM DISTR 6 28 64 82 121 155 154 211 208 219 244 219 209 193 1
S IN BEAM

RT	Q1		Q2		D1	SEXD	DRF1	Q3	ENTR		SEP1	WALL	STOP	SEP
	74	83	0	0	0	0	0	0	37	0	0	0	0	122
		SEXT		PLIM	DR64	DRF3	D2	DD2		Q6	DRF4		MAS2	MAS
	0	0	0	0	0	0	0	0	0	0	0	0	0	89

B E A M MPS 4** 4 ** DATE= 03/

Fig. 4 (b) Mode 4W

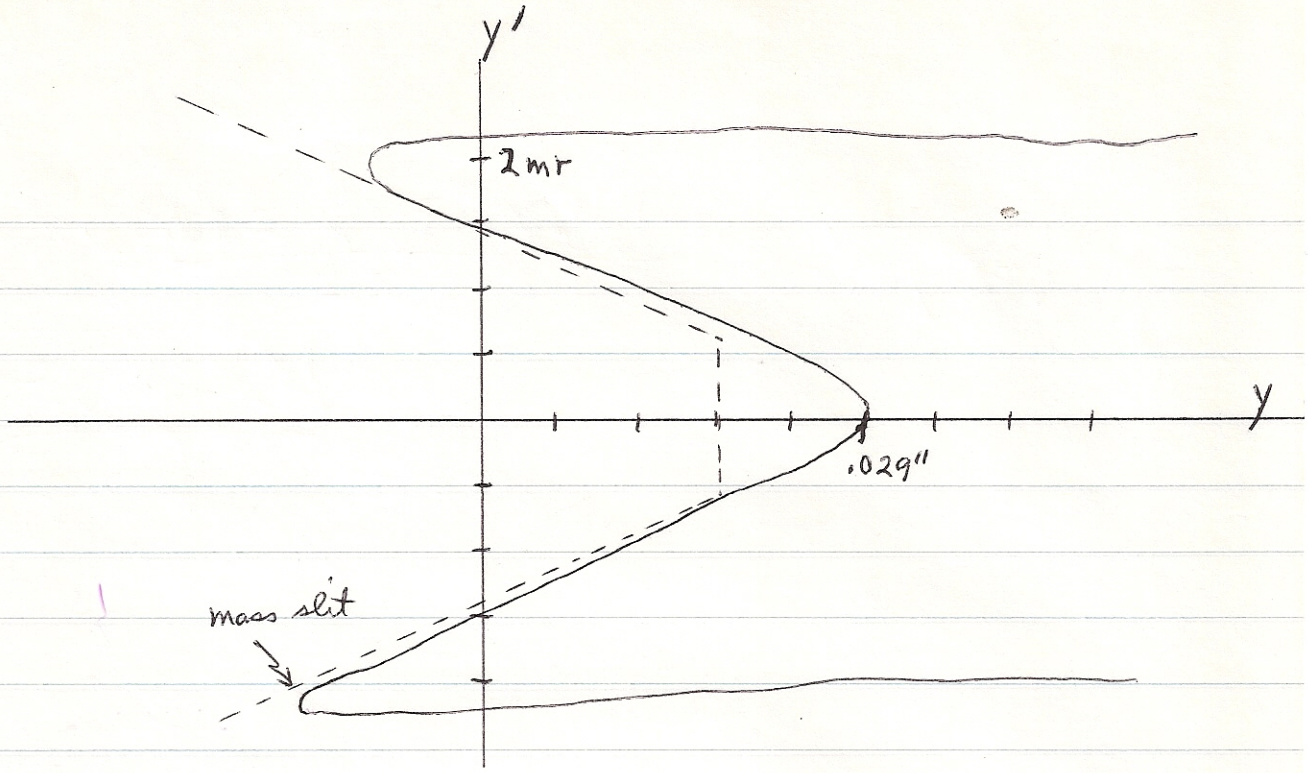

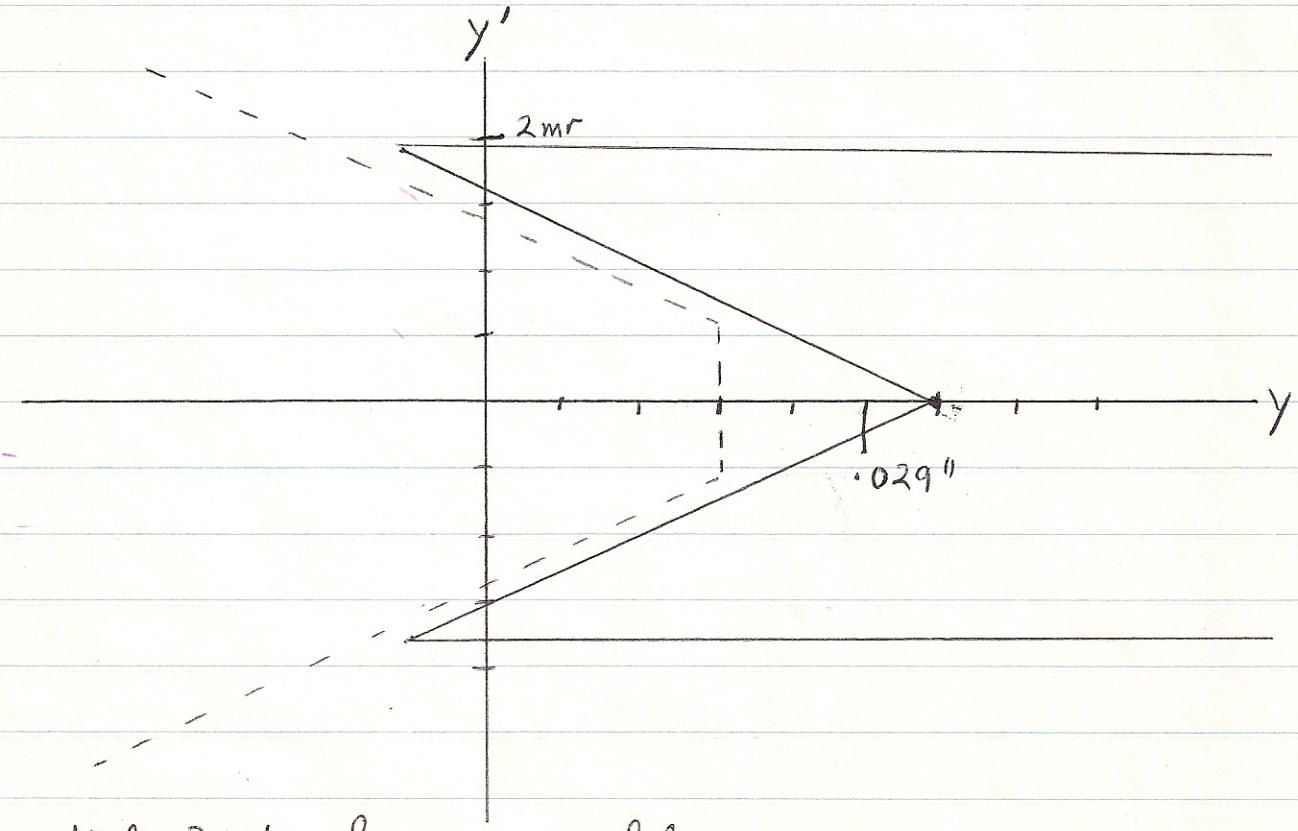

Fig. 5. Mode 3W phase space plots

JPRINT	XMAX	DXMAX	YMAX	DYMAX	K1	K2	K3	K4	X1	DX1	Y1
MASS MASS	4.00000	.10000	.06169	.00233	3	5	3	4	.001	.02000	.020

0	0	0	0	0	0	1	0	0	1	0	1	0	0	1	0	2	0	2	8
0	0	0	0	1	1	1	0	1	1	1	3	1	2	4	9	7	6	7	45
0	0	0	0	0	0	0	0	3	5	2	2	1	7	10	8	9	20	11	78
	0	0	0	0	0	0	2	0	4	0	2	5	8	7	21	20	15	13	97
0	0	0	0	0	0	0	0	1	1	2	6	5	9	23	25	27	21	28	148
0	0	0	0	1	0	1	0	0	2	3	5	9	13	16	30	33	34	24	171
0	0	0	0	1	0	2	2	3	1	2	9	10	12	24	38	34	35	26	199
0	0	0	0	0	0	0	1	4	2	4	6	12	13	18	41	30	37	31	199
0	0	0	0	0	0	0	2	1	1	4	6	8	11	20	28	32	27	33	173
0	0	0	0	0	1	0	0	2	4	4	6	6	12	20	19	47	29	36	186
0	0	0	0	0	0	0	1	1	3	4	3	6	8	10	33	34	31	32	166
0	0	0	0	0	1	0	0	1	1	0	2	7	11	14	23	36	29	34	159
0	0	0	0	0	0	0	1	0	1	2	4	11	10	24	27	39	39	28	186
0	0	0	0	0	0	0	0	1	4	0	5	6	10	13	26	34	34	32	165
0	0	0	0	0	0	0	0	0	2	3	4	3	11	11	25	28	39	35	161
0	0	0	0	0	0	0	2	1	2	2	1	6	9	14	23	22	33	19	134
0	0	0	0	0	0	0	0	0	1	1	0	5	5	5	21	24	24	32	118
0	0	0	0	0	0	0	0	0	1	0	2	1	6	11	9	18	18	16	82
0	0	0	0	0	0	0	0	0	0	0	1	1	0	9	13	10	15	8	57
0	0	0	0	0	0	0	0	0	1	0	1	0	1	3	1	2	0	4	13
0	0	0	0	3	3	5	11	19	38	34	69	103	158	257	420	488	486	451	.672 =
0	0	0	0	0	0	0	0	0	0	0	0	0	0	0	0	0	0	0	0
0	0	0	0	0	0	0	0	0	0	1	1	3	0	2	3	1	6	0	17
0	0	0	0	1	1	1	3	2	6	7	7	8	11	16	14	20	15	14	126
0	0	0	0	0	0	2	1	6	10	5	9	17	12	20	14	16	20	15	147
0	0	0	0	0	0	1	2	1	4	5	12	9	14	21	17	22	13	14	135
0	0	0	0	0	0	0	0	2	4	1	7	14	19	29	27	20	22	23	168
0	0	0	0	0	0	0	0	0	0	0	4	11	16	24	26	34	29	29	173
0	0	0	0	0	0	0	0	0	0	1	0	3	9	20	40	37	34	32	176
0	0	0	0	0	0	0	0	0	0	0	0	0	3	17	42	47	60	43	212
0	0	0	0	0	0	0	0	0	0	0	0	0	0	4	55	62	49	62	232
0	0	0	0	0	0	0	0	0	0	0	0	0	0	2	36	43	54	43	178
0	0	0	0	0	0	0	0	0	0	0	0	0	5	16	37	39	46	48	191
0	0	0	0	0	0	0	0	0	0	0	3	0	7	17	25	51	49	39	191
0	0	0	0	0	0	0	0	0	0	3	5	6	9	18	25	24	23	17	130
0	0	0	0	0	0	0	0	1	2	4	7	9	19	19	14	28	22	24	149
0	0	0	0	0	1	0	0	2	4	4	8	15	14	23	22	18	26		137
0	0	0	0	0	0	1	4	7	1	8	9	12	12	16	15	16	15		116
0	0	0	0	1	1	0	4	3	2	2	2	6	7	6	6	7	10	7	64
0	0	0	0	1	1	0	0	0	1	0	0	0	0	0	0	0	0	0	3
0	0	0	0	0	0	0	0	0	0	0	0	0	0	0	0	0	0	0	0
0	0	0	0	3	3	5	11	19	38	34	69	103	158	257	420	488	486	451	.592 =

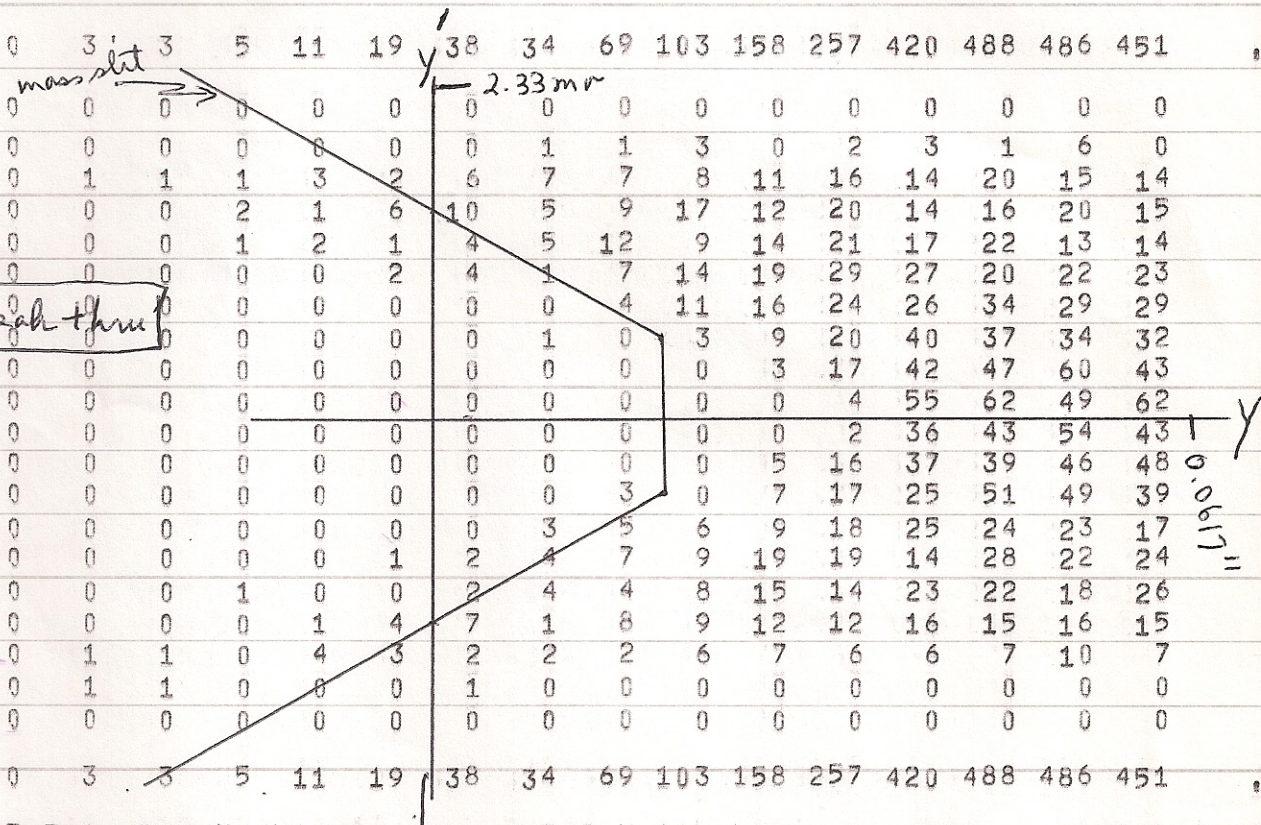

.040 (CENTRAL RAY Y)/WAIST= 1.332 YMAX,YMIN= .073 .033 YMIN/GEOM.I
ISSION TO MASS= .690 NTHIT= 1590 KILLK= 700 NK= 2710 KOUT/KIN= .795 NPI= 11300
UM DISTR 13 57 82 118 134 161 165 186 159 166 186 173 199 199
IN BEAM

T	Q1	Q2	D1	SEXD	DRF1	Q3		SEP1	WALL	SEP2	EXIT	
	73	87	0	0	0	0	0	1	34	639	132	79
1		PLIM	SEX2	DRF3	D2	DD2	Q6				MASS	
	9	452	0	0	0	0	0	10	13	0	0	0	865

MESB, MODE MPS 3 ** 3 ** CRAM IT AL IN 12 INCH TARGET DATE= 03

Fig. 6