BROOKHAVEN NATIONAL LABORATORY
Associated Universities, Inc.
Upton, New York

EP&S DIVISION TECHNICAL NOTE
No. 48

T. Blair and D. Lazarus

May 9, 1972

HOW TO PLAY THE TEST BEAM

General

The East Beam (Beam 6B) consists of two quadrupole doublets and two bending magnets. The optics are very simple as the beam is very nearly symmetric about the first focus which is at the position of the momentum defining collimator C_2. Figure 1a shows ray traces in both the horizontal and vertical planes, and Figure 1b gives the optical analogue of the beam. There are three quadrupoles in the doublet of the first part of the beam because Q1 and Q2 are small weak magnets and, therefore, are run in parallel so that they are equivalent to one big strong magnet.

Practical

The power supplies are turned on by the target watch; use the gray phone (switch in the normal position). They can also change the polarity of the beam upon request. All such changes are recorded so it is possible to obtain the recent history of the beam. They can also tap the power supplies to optimize power consumption for a given excitation. This limits the excitation and determines the range of regulation. If the power supplies are on, the magnets with the exception of D_1 can be excited with the controls in the East Test Beam trailer (west end of trailer). D_1 is at present controlled by the Beam 6A (neutral beam) Users from their trailer as this magnet sweeps charged particles from their beam. Note that up to this point the beam is common to the neutral and test beams.

Before attempting to tune the test beam, one should find out the excitation of D_1 from the neutral beam users. This determines the beam momentum and the other magnets must be tuned accordingly. Excitation curves and particle fluxes are given in Figure 2 and Table I respectively. To excite a magnet, push the "ON" button and raise excitation lever to the increase position. Shunt voltage is read from the upper pair of terminals on the control panel with a digital voltmeter (DVM). You must supply the latter from your own cache or from the High Energy Equipment Pool (HEEP), unless someone else has provided one. If you are unfamiliar with the tuning of beams at the AGS, you should contact T. Blair (ext. 4671) before you turn on the test beam for the first time. He will be glad to assist you.

Trouble

1. If you can not get the "ON" light to go on and the trouble light appears, note the power supply number PS on the control panel and call the target desk to report the trouble.

2. If all magnets are on and you are not seeing any particles, check that the AGS is running and that targeting is taking place at G10. You can find this out from main control or from one of the running experiments.

3. Check that no obstacles are in the beam upstream of your counters.

4. Check magnet excitations again.

5. Have the target desk check polarities. The polarity convention used is "A" is horizontally forcussing for positive particals in the case of quadrupoles and bending toward the AGS ring for dipoles (positive particles). "B" polarity implies the same for negative particles or the opposite for positives. Negative beam is therefore AABAABA.

Cautions

1. Do not expose yourself to the beam unnecessarily when running; the beam can contain more than one rem/hour.

2. At the present time (1972) the neutral beam users (Columbia/ Cern/ NYU Exp. 556) require that a two-inch thick lead brick be placed in the

beam to reduce gamma backround in their spark chambers. This brick is at the entrance to Q1, and it spreads the beam to mearly a foot in diameter thereby reducing the rate incident on your counters by one or two orders of magnitude depending on the counter geometry. The brick can be remotely removed with the permission of Experiment 556.

3. Do not leave the beam on for long periods of time without users.

We thank Roy Rubenstein for his comments and for Fig. 3.

Distribution: EP & S Division
Experimenters

TABLE I

EAST TEST BEAM PARAMETERS

Momentum Range $p = 2\text{-}17$ GeV/c

Acceptance $\Omega = 9$ msr*

Momentum Acceptance $\frac{\Delta p}{p} = \pm .02$ **

Beam Spot Size 3" - 4" (horizontal) x 2" - 3" (vertical)

APPROXIMATE π^- FLUX/ 10^{12} PROTONS ON G10 TARGET

Beam Momentum	6 GeV/c	12 GeV/c	17 GeV/c
Flux	1×10^6	3×10^5	2×10^4

* This is dependent upon the collimator C1 at the input to quadrupole C_1 . The figure given here is for the collimator installed for Exp. 556 in the neutral beam. An acceptance of 150 msr is atainable with no collimator.

** This is the maximum momentum band transmitted. Under normal conditions the momentum defining aperture C_2 will be reduced so that the beam flux corresponds to the requirements of the Radiation Safety Committee.

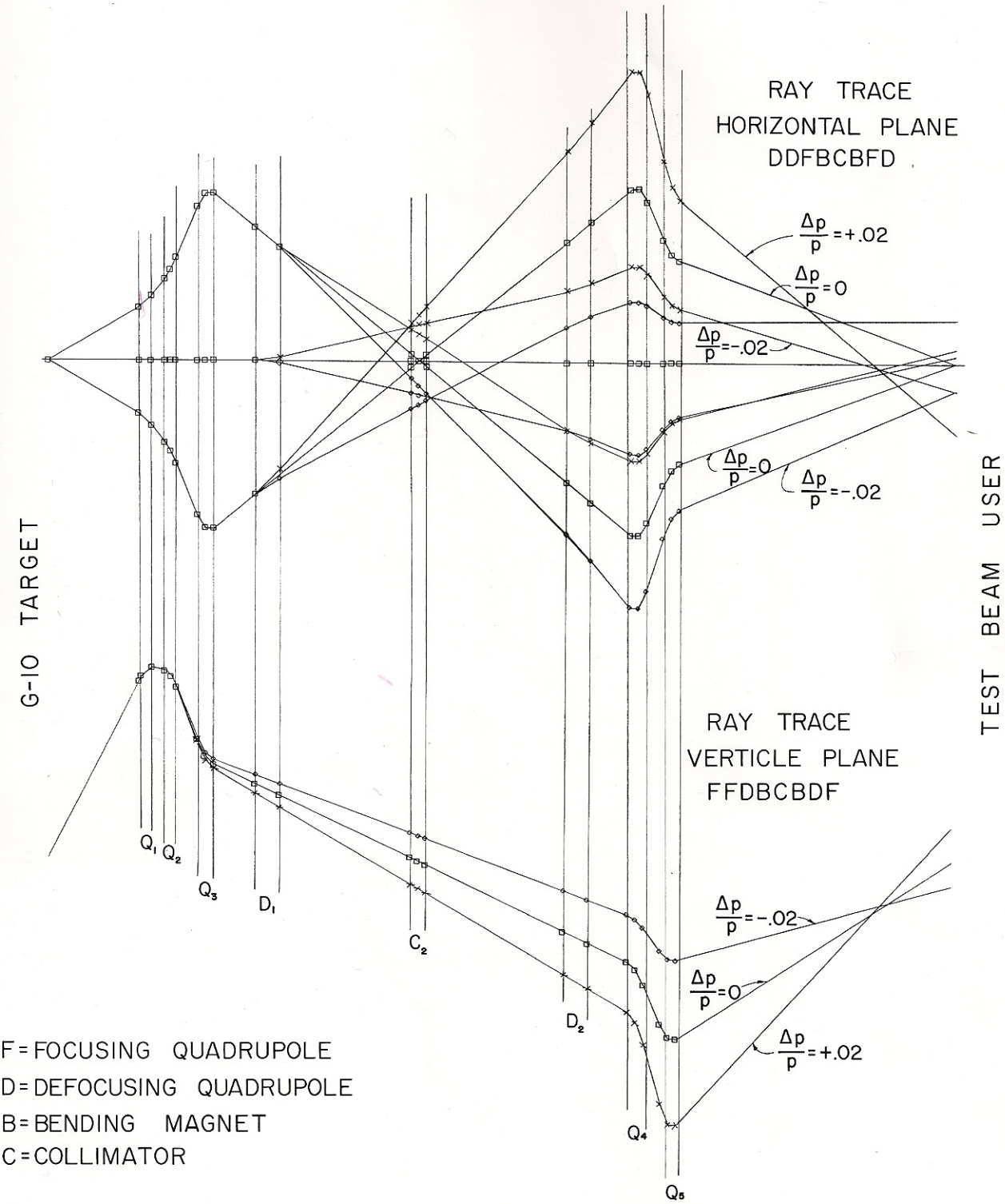
RAY TRACE
HORIZONTAL PLANE
DDFBCBFD
Δp/p = +.02
Δp/p = 0
Δp/p = -.02
Δp/p = 0
Δp/p = -.02
G-10 TARGET
TEST BEAM USER
RAY TRACE
VERTICLE PLANE
FFDBCBDF
Q1
Q2
Q3
D1
C2
D2
Q4
Q5
Δp/p = -.02
Δp/p = 0
Δp/p = +.02
F = FOCUSING QUADRUPOLE
D = DEFOCUSING QUADRUPOLE
B = BENDING MAGNET
C = COLLIMATOR

Figure 1

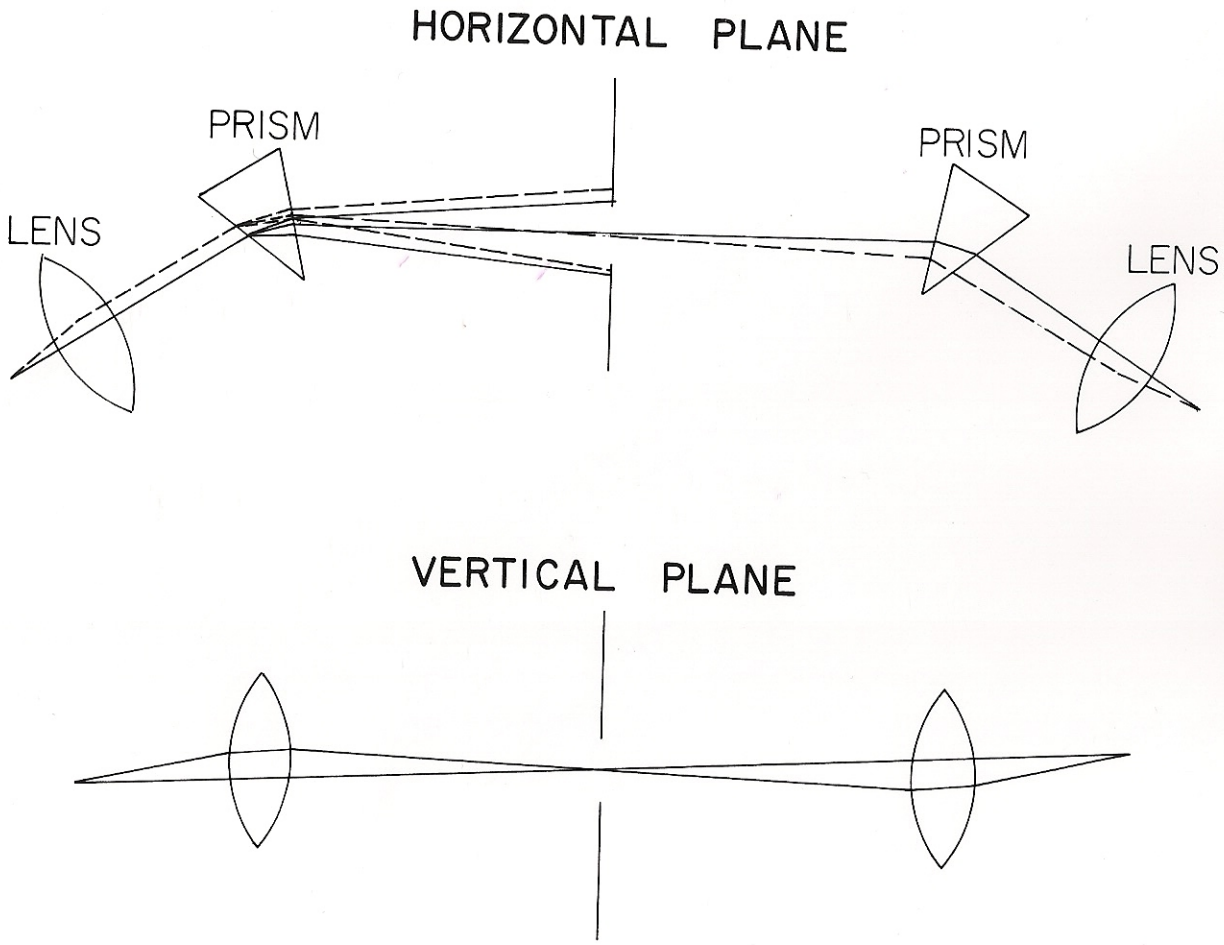

Figure 2

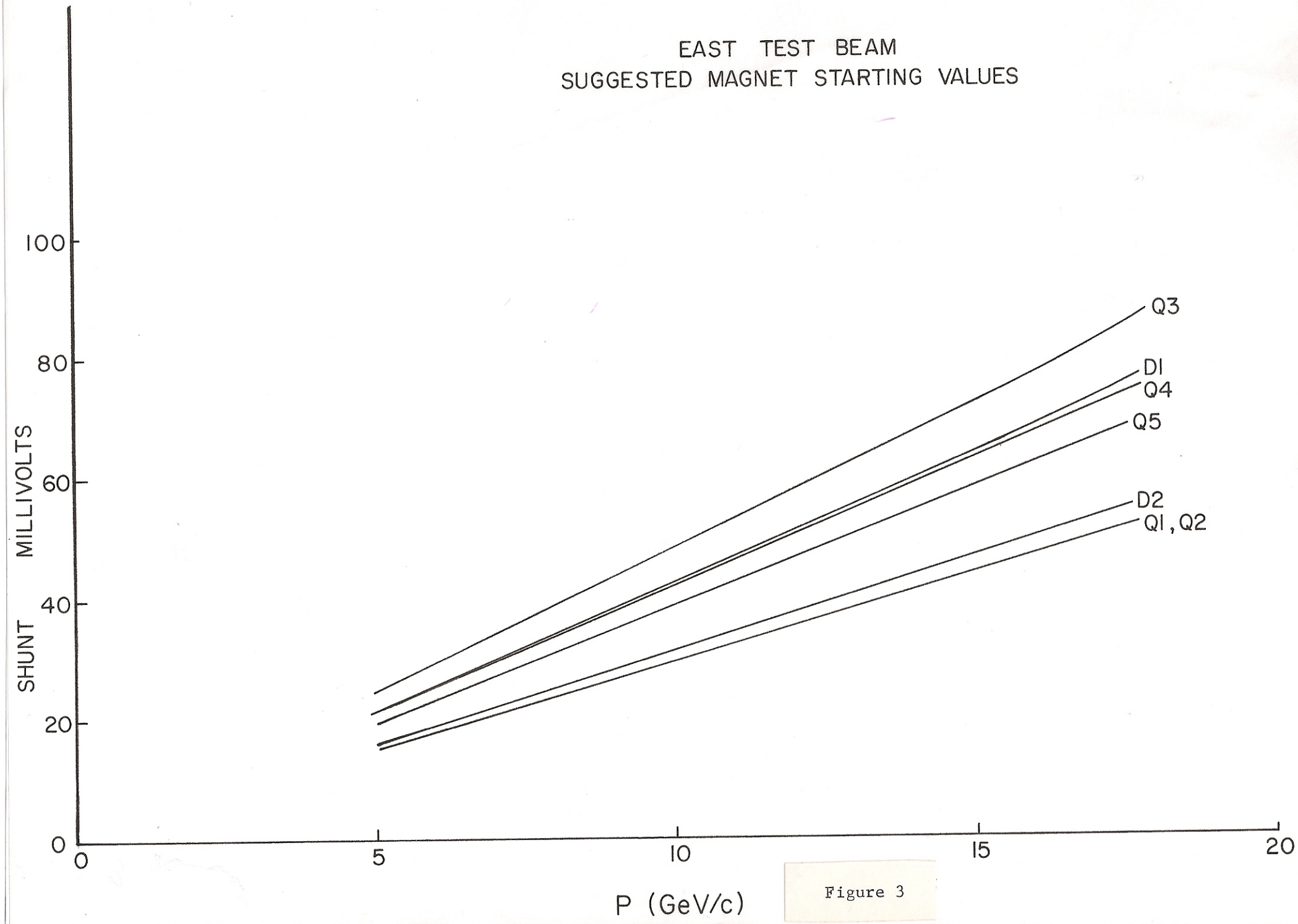
EAST TEST BEAM
SUGGESTED MAGNET STARTING VALUES
SHUNT MILLIVOLTS
100
80
60
40
20
0
0
5
10
15
20
P (GeV/c)
Q3
D1
Q4
Q5
D2
Q1, Q2

Figure 3