For Internal Distribution Only

Alternating Gradient Synchrotron Department

Brookhaven National Laboratory

Associated Universities Inc.
Upton, New York 11973-5000

EXPERIMENTAL PLANNING AND SUPPORT DIVISION

AGS/EP&S Technical Note No. 151

NOTES ON THE PROPOSED HORN POWER SUPPLY

E. B. Forsyth

March 1, 1995

3/1/95

Notes on the Proposed Horn Power Supply

E. B. Forsyth

Introduction

The old horn power supply has a long and varied history*. When used in 1987 it was found difficulties arise above 10 kV charging voltage and it has been decided to build a new power supply for the neutrino oscillation experiment. It has been proposed to build two supplies in order to power each horn separately. In the past the two horns were in series. A group at TRIUMF has proposed a design for a power supply for a single horn using SCR switches. A discussion of this design and some alternative approaches are given below.

Circuit Considerations

It is planned to use the existing horns to the maximum extent possible. The inductances for the narrow band system are given in the paper by Sandberg et al as follows:

Coaxial Cable	:	50 nH	
Horn Coax	:	125 nH	
Horn # 1	:	462 nH	1029 nH**
Horn # 2	:	567 nH	
Key	:	350 nH	
Links	:	35 nH	

*The Neutrino Horn 300 Kiloampere Pulsed Power Supply at BNL, J. Sandberg, et al. Proceeding Part. Accel. Conf., 1987.

A General Purpose 100 Kilojoule Pulser, E. B. Forsyth, Proc. 9th Modulator Symposium, May 1966.

** The two wide band horns have a total inductance of 1198 nH.

Power Supply	:	75 nH

The measured time to the current waveform peak was 58 μs, the power supply capacitance was 850 μF, later increased to 1116 μF. The peak design current is 250 kA. (A maximum of 285 kA is reported by Sandberg et al.) Presumably the rise time with 1116 μF increased to 66 μs. Thus the rms current which corresponds to 285 kA and 66 μs quarter period sets the thermal limit (electric) of the horn as minimal changes to the cooling system are proposed. The repetition period was 1.2 to 1.4s.

It is proposed to locate the cables connecting the power supply modules to the horns outside the shielding. New keys will have to be designed to penetrate the shielding, it seems likely these will be longer than the original design.

The perceived advantage of separating the horns is mainly that the power supply voltage is lowered. A secondary consideration is that the single horns may be easier to move if repair is necessary. The reduction in voltage can be roughly calculated from the table of component inductances given above. The horns contribute 1029 nH out of a total of 1664 nH. If one horn and one key are removed, say horn # 1, then the total circuit inductance is 1027 nH and the remaining horn (# 2) contributes 567 nH. Thus for 1 volt across horn # 2 the power supply voltage is 1.81 v. For 1 v across # 2 in series with horn # 1 the power supply voltage is 2.93. (These simple calculations assume the resonant frequency is always maintained constant by judicious choice of the storage capacitor value.) Use of the wide band horn system will raise the voltages slightly. Thus a common supply for 2 horns in series will run approximately 162% of the supply for a single horn. A secondary consideration is that the damping is increased, and the peak current slightly decreased, as

the L-C ratio is lowered, as in a single horn supply.

Figure 1 shows a greatly simplified resonant circuit, in which all the power supply modules are lumped into one capacitor and one series switch. A second switch, closed at the current peak, damps the oscillation so that the current is unidirectional. C_1 is the storage capacitor, L_1 the horn inductance and R_1 the damping resistor. The following table was generated by the simulation:

Simulation	L_1, nH	C_1, μF	R_1, mΩ	Vpk, kV
2 wide band horns	1200	1000	10	12.5
1 horn (# 2)	567	2000	8	7.5

The circuit values all yielded 250 kA peak with a quarter period of about 60 μs, the waveforms are shown in Figs. 2 and 3. The inductance of the 'key' is halved in the simulation for the single horn load.

An earlier simulation is shown in Fig. 4. This represents the five module design from TRIUMF for a single horn load. In this case all five modules are simulated. Note that oscillations are present on the voltage waveform shown in Fig. 5 - a condition that may increase the electric stress on the insulation of the transmission lines and horn. This effect may also cause premature breakdown of the damping switch, S_2. The resonant frequency for this design resulted in a 30 μs rise time, this is shorter than the original supply and thus does not fully exploit the ability to trade off maximum charging voltage against rms current.

Component Considerations

Capacitors

Energy storage capacitor designed for capacitive discharge circuits are available. Lifetime is greatly affected by four factors:

1) Voltage rating vs max charging voltage
2) Voltage reversal during discharge cycle
3) Ringing frequency
4) Temperature

Curves for the Maxwell line of capacitor are shown in Fig. 6. Voltage reversal is another case where rms current can be traded for life: if a low value of damping resistor is chosen the rms current (and thus heating) is the horn is increased, but the percentage voltage reversal is reduced, this could lead to significantly longer life. It should be possible to hold the reversal to less than 20%.

The number of capacitors in one module is determined by the switch characteristics. However all capacitors must be protected from an explosive inrush current caused by paralleled units dumping into a failed capacitor. The original power supply consisted of 20 modules. For example 2 each Maxwell capacitors # 33464, rated 30 μF ($\pm$ 10%) at 20 kV would suffice. The design voltage reversal is 80% for a life of 10^5 shots. The life expectancy factor for 20% voltage reversal is x16 and the factor for 15 kV operation x7. Thus the predicted life at 25°C max is $16 \times 7 \times 10^5 \approx 1.1 \times 10^7$ shots.

Switches

The horn power supply wound up using GL 37207A ignitrons, the ratings are shown in Fig. 7. This unit is rated for 25 kV max, a peak current of 300 kA and an average current of 10 A. It can switch 200 coulombs/min. It should be entirely possible to use this ignitron

in only 10 modules; a considerable cost saving. Failures in the previous design were obviously not due to exceeding the switch ratings. In previous ignitron-switched capacitor bank power supplies built at the AGS, the switch and housing formed a complete coaxial assembly, which guaranteed the plasma did not leave the mercury pool. The open cage used in later versions the horn power supply may have permitted "arc wander" at voltages over 10 kV; a possible contributory factor to the failure history. The layout of the Rapid Beam Deflector (RBD) is shown in Fig. 8. This was a successful pulser used for beam manipulation in the AGS in 1960's and 1970's, it was built in some quantity and was extremely reliable. The anode was warmed by means of a cartridge heater with thermostat in a metal block. The heater was feed with 115 V from a well insulated transformer.

The TRIUMF design uses a GTO modified for high di/dt applications. The manufacturer is Westcode Semiconductors Ltd, Model WG 20045 E6G. It has a PIV of 4.5 kV, thus a series stack will be needed for the 10 kV charging level. TRIUMF recommend 4 units in series, but the PIV to operating voltage ratio of 2.5 commonly used for AGS equipment implies 6 will be needed for 10 kV operating voltage, see Fig. 9. It is very important to choose a conservative safety factor for the PIV: failure of one unit in a series stack could lead to a cascade failure of all the units in the stack. The group at TRIUMF have also proposed to use a transformer coupled power supply which would oscillate at a considerably lower frequency than the original design. The major drawback of this approach seems to be the increased rms current, which would require the cooling capacity to be increased by about a factor of 4. The current carrying ability of the semiconductor switches is also relatively low and paralleled stacks may be needed to deal with overloads caused by

shorts or flashovers in the horns or transmission cables.

Each solid-state switch costs approximately $2000, thus the total cost for a series/parallel stack would be very high.

Transmission Line

At various times both flexible coaxial cable and rigid pipes have been used to connect the modules to the horns. The TRIUMF group proposes to use a rigid parallel-plate transmission lines. All transmission lines face a compromise between high-voltage integrity and low inductance. Less insulation thickness reduces the inductance at the expense of greater electric stress. Commercially made insulation can usually run reliably at higher stress than hand-applied insulation. For repetitive pulse excitation commercial extruded insulation can withstand over 20 kV/mm and thus permits the lowest inductance. A problem with running many cables in parallel is the cost and complexity of making numerous high voltage stress cones, which are usually the Achilles' heel of cable systems. Commercially made terminations made by the cable manufacturer should be seriously considered. High current cable made by Dielectric Specialties with extruded polyethylene insulation rated for 50 kV has an inductance of about 18 nH/ft, see Fig. 10. Thus 20 cables in parallel 100 ft long would contribute 90 nH to the circuit inductance. Sandberg et al. report the inductance of the keys to be twice that of the coaxial cable, even though the keys are only 10 to 20% the length of the connecting cables. This seems like an area for great improvement. It should be possible to design a 3m-long key with accommodation for cable terminations at one end with an inductance of about 50 nH each. (100 cm width, 1 cm thick insulation.) Thus optimally designed keys and transmission line could save as much as 285

nH or 17% of the total circuit inductance energized in the past. This would drop the voltage for a series horn configuration from 12.5 kV to 10.4 kV.

Summary

It is important to decide on the future of the horn beyond the next neutrino experiment. If the experiment is likely to be the last then the power supply should be designed with a limited life and for the lowest cost consistent with reasonable reliability. If, on the other hand, the horn will provide a permanent experimental facility, then long life and very high reliability at a higher cost will direct the course of the power supply design. The first option implies ignitron-switched modules, the number of which are kept to a minimum. Almost certainly, reasonable reliability can be achieved using the horns in series. A preliminary design analysis indicates that ten modules should provide adequate performance and a life of approximately 10^7 shots. The choice of the number of modules impacts on reliability. If five modules are used to power separate horns the failure of one module requires a 20% increase in the voltage on the remaining modules to maintain the horn current. The second option may be achieved with SCR or ignitron switched modules, possibly driving separate horns. In all cases the design of such high peak current devices implies very careful attention should be paid to the inductances of all components in the high current path, especially the transmission lines or cables and the connecting keys and links.

Figure 1

Simulation of single horn power supply.

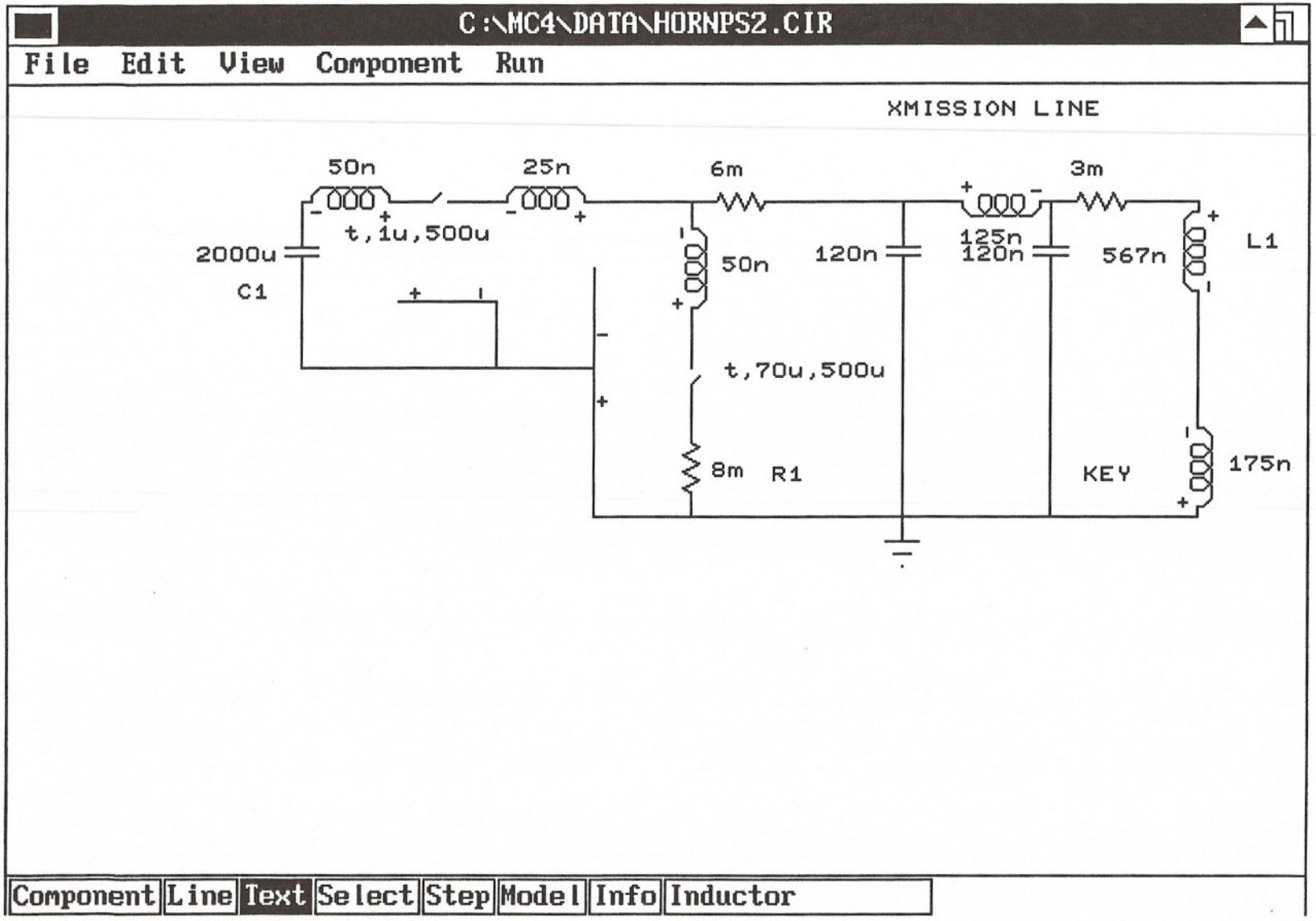

Figure 2

Current and voltage waveform for a single horn load.

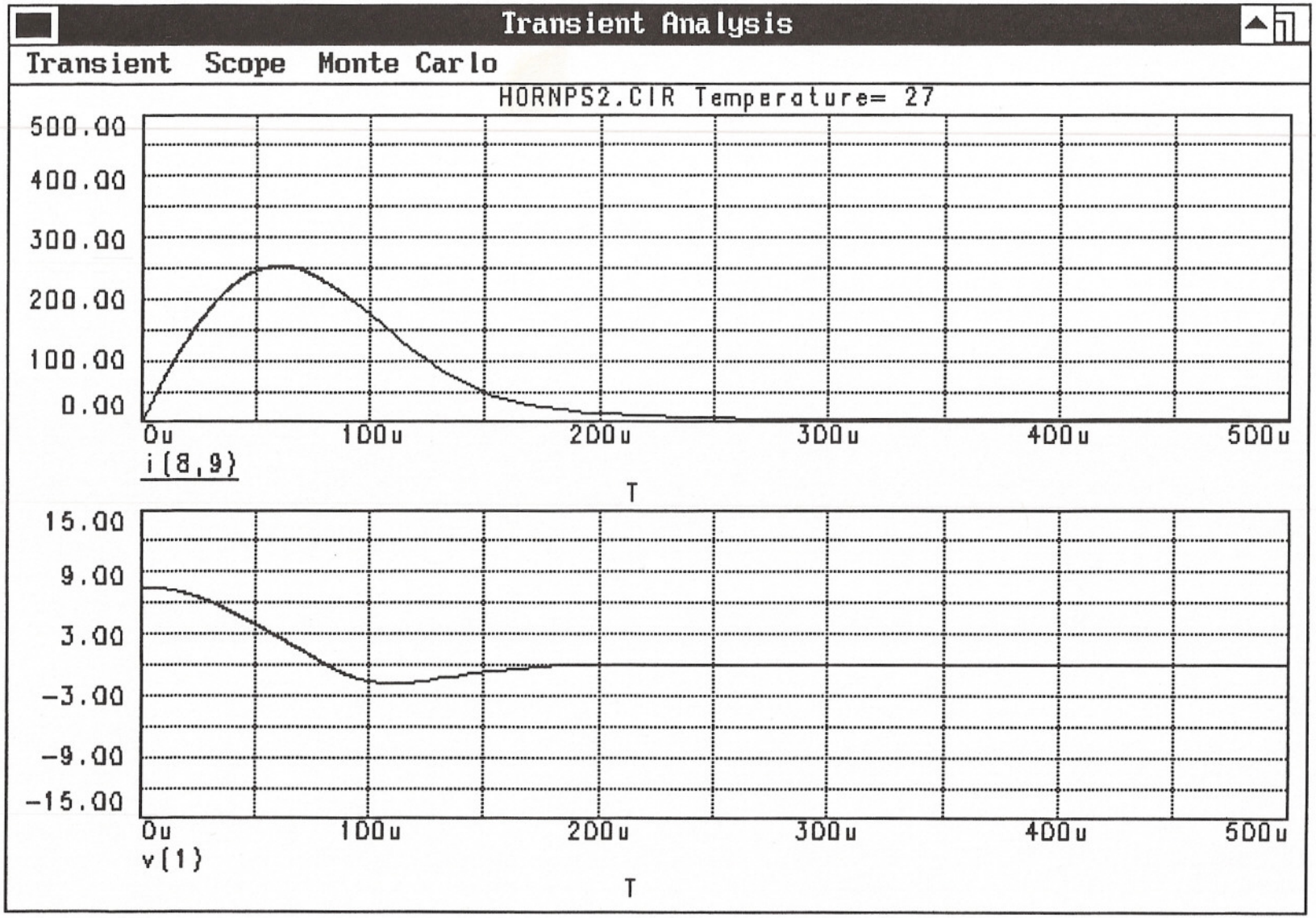

Figure 3

Current and voltage waveform for a load of two horns in series.

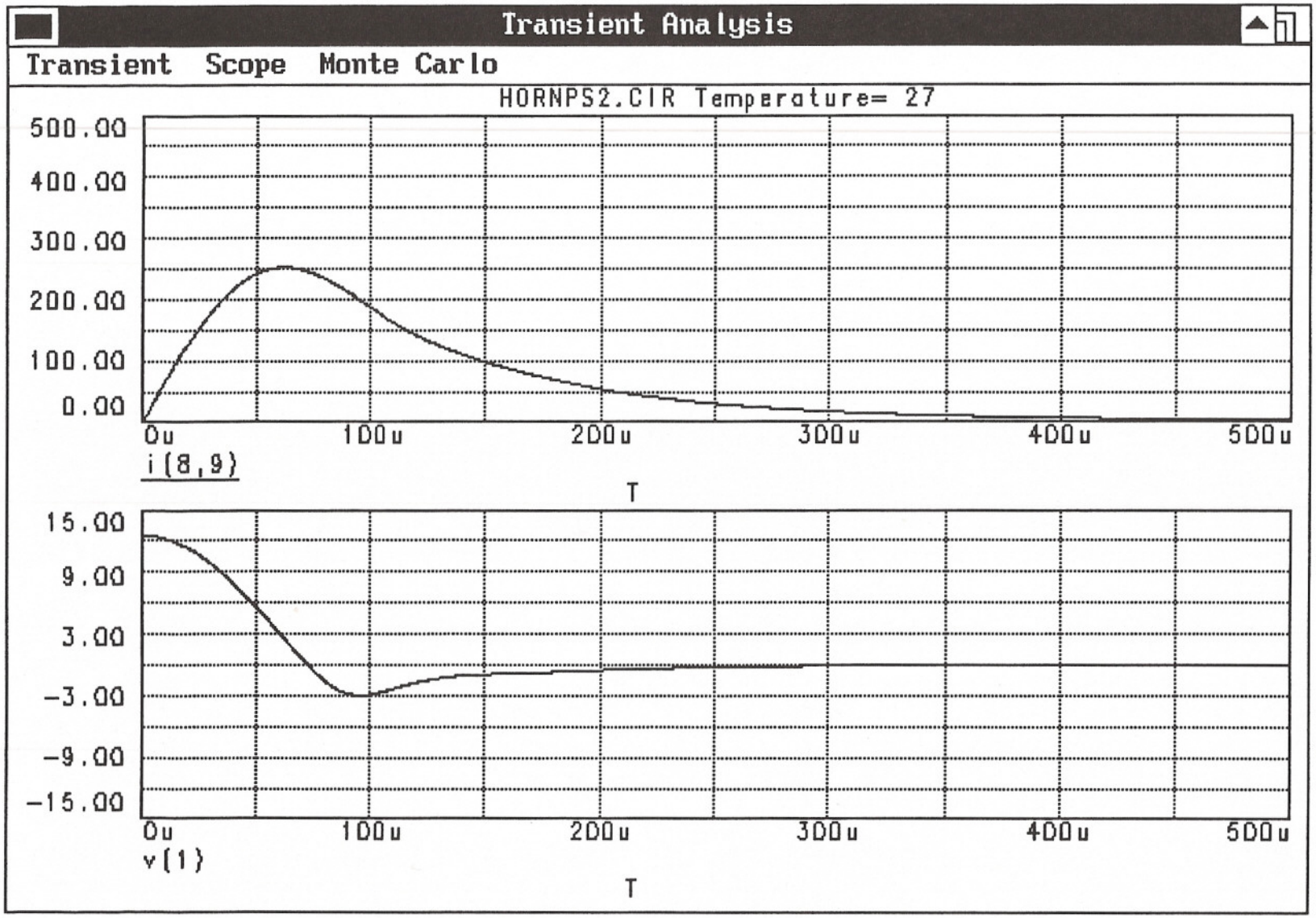

Figure 4

Simulation of a five module power supply design (Triumf design).

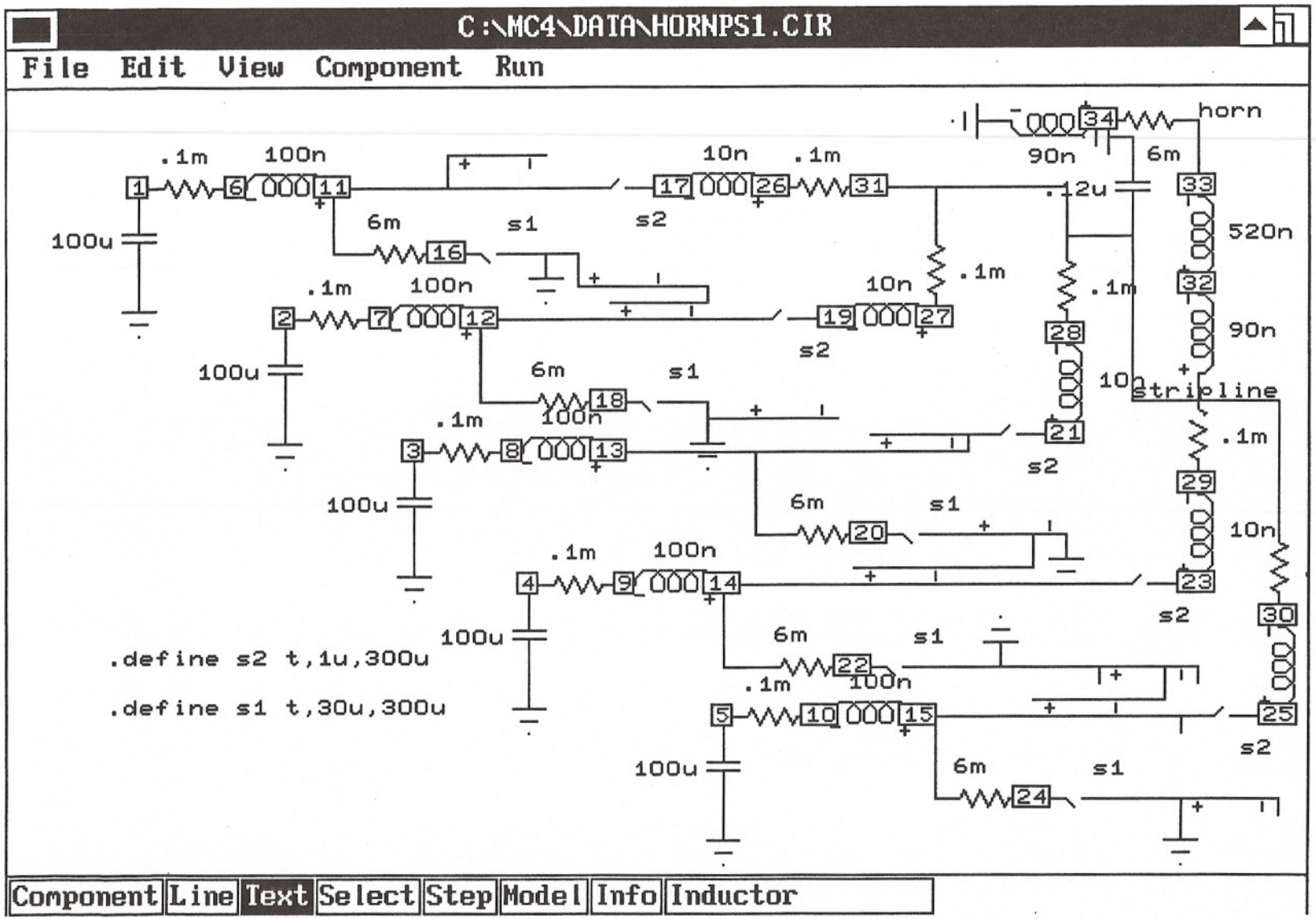

Figure 5

Current and voltage waveform associated with the Triumf design.

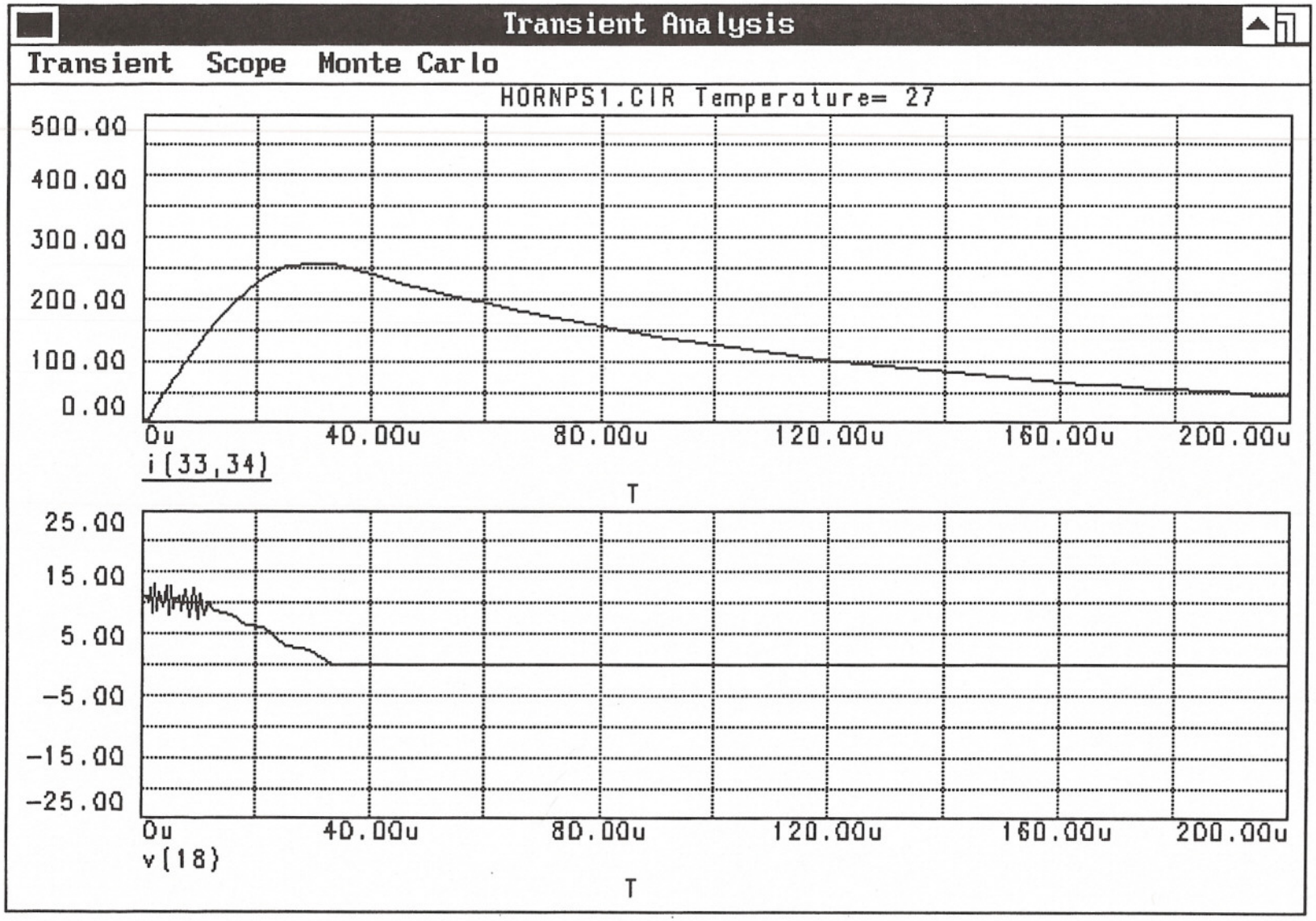

VOLTAGE REVERSAL COEFFICIENT OF LIFE
LABORATORY ENVIRONMENT
REP. RATE: ~ 4 ppmin.

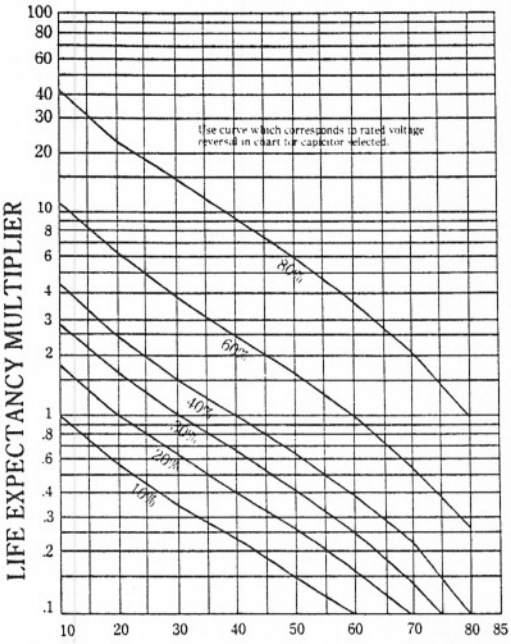

CHARGE VOLTAGE COEFFICIENT OF LIFE
TEMP. = 25° C
REP. RATE: ~ 4 ppmin.

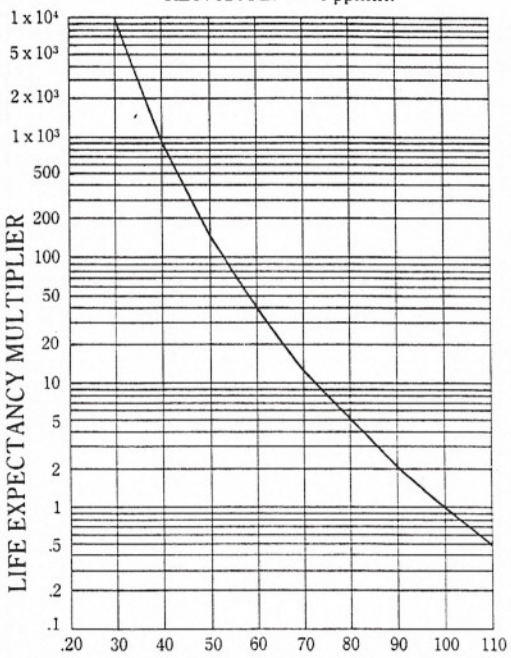

RATED VOLTAGE is the Maximum DC voltage to which the capacitor should be charged to obtain rated performance characteristics.

Figure 6

RINGING FREQUENCY COEFFICIENT OF LIFE
TEMP. = 25° C
REP. RATE: ~ 4 ppmin.

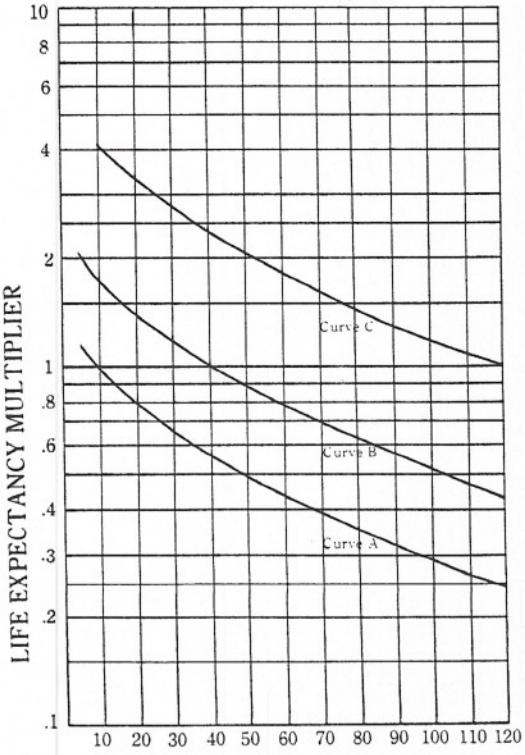

RINGING FREQUENCY is determined by total bank capacitance and circuit equivalent series inductance (ESL).

TEMPERATURE COEFFICIENT OF LIFE
REP. RATE: ~ 4 ppmin.

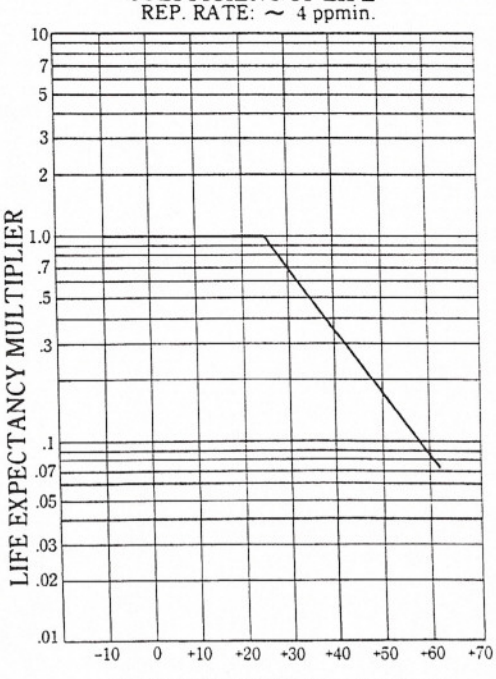

ELECTRONIC INNOVATIONS IN ACTION

MICROWAVE DEVICES

- Product Information -

IGNITRON

GL-37207A

CAPACITOR DISCHARGE SERVICE — 25,000 VOLTS PEAK
ELECTRONIC CROWBAR SERVICE — 300,000 AMPERES PEAK

The GL-37207A ignitron is suitable for use as a switch for either capacitor discharge service or as an electronic crowbar, at peak voltages from a few hundred volts to 25 kilovolts, and peak currents up to 300 kilo-amperes. A feature of this type is a holding (auxiliary) anode which provides a means for keeping the tube ionized should oscillation be desired, or to assure conduction at very low anode voltages.

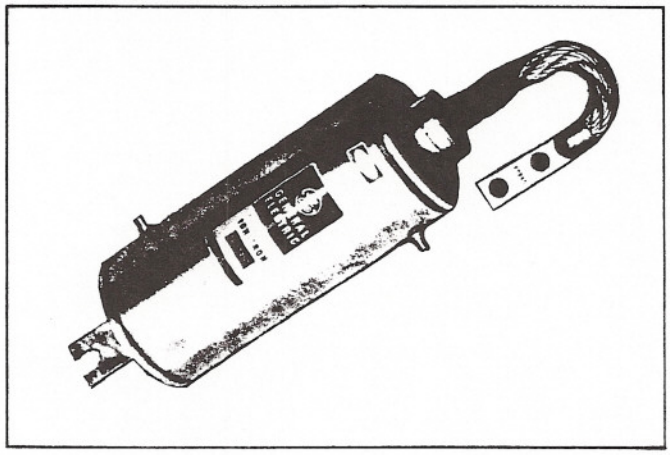

ELECTRICAL

Cathode Excitation	Cyclic
Cathode Spot Starting	Ignitor
Number of Electrodes	
Anode	1
Cathode	1
Ignitor	2
Holding Anode	1
Inductance	90 nh

MECHANICAL

Envelope Material	Stainless Steel
Mounting Position	Axis Vertical Anode Up
Net Weight	20 Pounds
Diameter (Cylinder)	5½ Inches
Height (Rigid), Nominal	19 Inches

IGNITOR RATINGS

Voltage	Min.	Max.
Open Circuit (Ignitor +)	1500	3000 Volts
Inverse (Ignitor –)	——	5 Volts
Current, Short Circuit	100	250 Amperes
Length of Firing Pulse, 1/2 Sine Wave	5	10 u sec.

THERMAL

Type of Cooling	Convection, or Liquid†
Inlet Water Temperature, Minimum	10° C
Inlet Water Temperature, Maximum	30° C
Nominal Water Flow	1.5 GPM
Cathode Temperature, Maximum	35° C
Anode Header Temperature, Maximum	55° C
Anode-Cathode Temperature Differential*	

MAXIMUM RATINGS	DAMPED DISCHARGE	RINGING DISCHARGE
Peak Anode Voltage		
Forward	25,000	25,000 Volts
Inverse	25,000	25,000 Volts
Critical Anode Starting Voltage, Minimum	100	100 Volts
Anode Current		
Peak	300,000	300,000 Amperes
Average	10	2 Amperes
Maximum Averaging Time	1	1 Cycle
Length of Conduction	0.7	10 Milliseconds
Rate of Rise of Current	**	**
Discharge (Repetition) Rate, typical	4	4 Per Minute
Total Charge (Per Minute)	200	200 Coulombs
Ionization Time	0.5	0.5 Microseconds
Voltage Reversal	None	50 Percent

HOLDING ANODE RATINGS	Min.	Max.
Voltage (Positive DC)	80	150 Volts
Current	5	10 Amperes

* To prevent mercury condensation on the anode and anode seals, the anode header temperature should be higher than the cathode temperature at all times. Before tube operation the anode seals must be warmed, with respect to the cathode, long enough to vaporize all mercury from the seal area.

** Rate of rise depends upon the external circuitry.

† Although the tube is equipped with an integral water jacket liquid cooling may not be necessary for relatively light duty or infrequent operation.

‡ A rectifier may be used to supply the required power, or a large capacitor may be discharged into the holding anode with a time constant larger than the desired conduction time. The power must drop to zero after conduction so the ignitron will regain control.

Figure 7

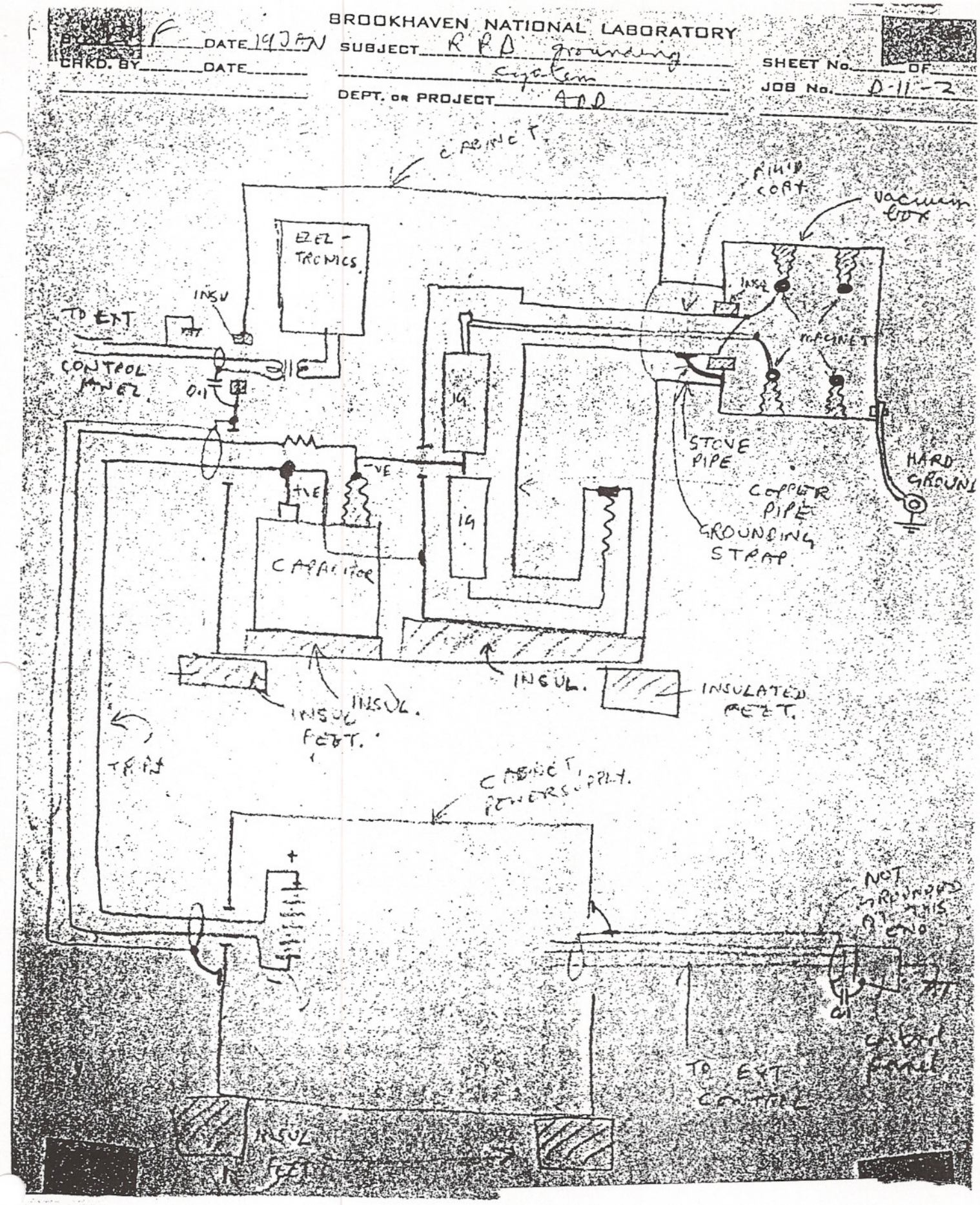
BROOKHAVEN NATIONAL LABORATORY
BY F DATE 19 JAN SUBJECT RRD grounding system
CHKD. BY DATE
SHEET No. OF
JOB No. D-11-2
DEPT. OR PROJECT ADD
CABINET
RIGID COAT
vacuum box
ELEC-TRONICS
INSU
TO EXT CONTROL PANEL
0.1
IG
IG
-VE
+VE
CAPACITOR
STOVE PIPE
COPPER PIPE
GROUNDING STRAP
HARD GROUND
INSUL.
INSUL.
INSUL FEET.
INSULATED FEET.
TRIP
CABINET POWER SUPPLY.
NOT GROUNDED AT THIS END
TO EXT CONTROL
INSUL FEET

Figure 8.

TELEFAX

MESSAGE NO: 1587

Sheet 1 of 8

Date: 26TH OCT 94

To: GARY WAIT

TRIUMF - Vancouver Canada.

From: FRANK WAKEMAN

HAWKER WESTCODE SEMICONDUCTORS SIDDELEY

WESTCODE SEMICONDUCTORS LIMITED
P.O. BOX 67, Chippenham
Wiltshire, England SN15 1JL
Telephone: (0249) 444524 (SALES)
Int: +44 249 444524
(0249) 461122
Telefax: (0249) 659448
Int: +44 249 659448

c/o. Ian Davidge.

Re: GTO for pulse power application.

From the data you provided by you I conclude each device is required to pulse 50kA for di/dt ≈ 3kA/µs to give 250kA for di/dt 15kA/µs with 5 parallel paths. (A minimum of 4 × 4.5kv required in series for 10kv).

Measurement on available Westcode Samples type WG2004SE6G (same as CERN). indicate this device may be suitable. (see page 2 for outline drawing).

Typical results for I_{TM}=50kA, di/dt=3kA/µs & V_D=1500v.
with 150A gate pulse (di_G/dt ≈ 100A/µs)

Total pulse energy = 100 Joules.
Delay time (t_d) = 0.7µs.
Turn-on-time (t_{gt}) = 2.5µs.

(See Page 3 for Transient Thermal curve)

Note:- Higher di/dt to 10kA/µs or increased V_D will not significantly effect these results. [Device is 4.5kv suitable for 2.5kv DC max]

Please advise if further information is required and contact Mr. Davidge for Price & delivery

Regards.
Frank Wakeman

BSI REGISTERED FIRM
ISO 9001
EN29001
BS5750 PART 1
QUALITY SYSTEM
Certificate No. FM 26085

Registered Office: Silvertown House, Vincent Square, London.
Registered in England: Number 1841896
A member of the BTR Group

Figure 9

DIELECTRIC SCIENCES INC.

68 TURNPIKE ROAD, CHELMSFORD, MASSACHUSETTS 01824
TELEPHONE (508) 250-1507 TELEX 508603 DISCI
FAX NO. (508) 250-1699

HIGH VOLTAGE / PULSE CABLE DESIGN

Center Core	-	Natural polyethylene to	-	0.887 in. dia
Inner Conductor	-	7 ends of #30 AWG bare braid(s) to 33600 CM equivalent		
Inner Semicon. Layer	-	0.030 in wall semicon poly	-	0.995 in. dia
Insulation Layer	-	Natural polyethlyene to	-	1.240 in. dia
Outer Semicon. Layer	-	0.030 in wall semicon poly	-	1.300 in. dia
Outer Conductor	-	7 ends of #30 AWG bare braid(s) to 33600 CM equivalent		
Outer Jacket	-	Black vinyl to	-	1.468 in. dia

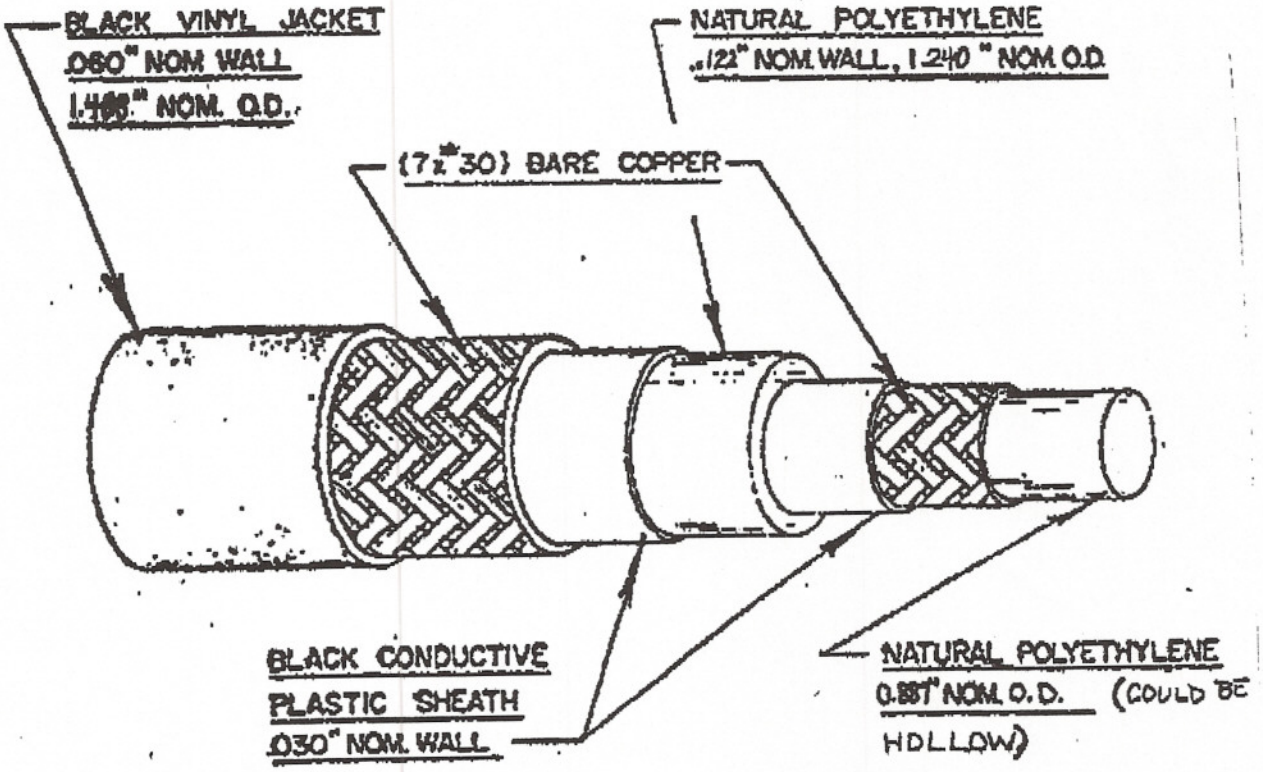

PART NO. 2206

Figure 10