AUG 18 1993

For Internal Distribution Only.

Alternating Gradient Synchrotron Department
Brookhaven National Laboratory
Associated Universities, Inc.
Upton, New York 11973

Experimental Planning and Support Division Technical Note

AGS/EP&S Technical Note No. 147.

The Prototype Skinny Shield Radiation Monitor System

G. Bennett, V. Castillo, W. Glenn

Introduction

The prototype Skinny Shield Radiation Monitor System is described and the results of its calibrations in the lab and with the proton beam are presented. Appendix-I is a detailed account of the Chipmunk circuit operation and Appendix-II contains calculations relevant to the Chipmunk operation.

Description

The ionization chambers for the Skinny Shield Radiation Monitor System (SSRMS) consists of 1/2 inch heliax coaxial cable, Andrew's catalog no: HJ4-75 Heliax coaxial cable A10W 72189. Each monitor is about 800 feet long and spans 4 AGS superperiods. There are 2 monitors, Fig. 1a, from A15 to I10, North Skinny Shield (NSS) and 2 from B11 to E17, South Skinny Shield (SSS). These monitors are located, Fig. 1b, above the light fixtures that line the wall, aisle-side, of the AGS tunnel.

The electronics is situated in room 222 above the MCR; they consist of modified Chipmunk circuits. Only one each of the NSS and SSS monitors has electronics presently.

Chipmunk - NORMAL OPERATION

The Chipmunk is designed to produce a .111 Hz signal when it's ionizing chamber is radiated by a 1 mrem/hr source. The source used for calibrating the Chipmunk (a 30 mCurie Cs137 source specially shielded) is approximately this strength.

Extrapolating, a 10 mrem/hr source will produce an output of 1.11 Hz and a 100 mrem/hr source 11.1 Hz. The Chipmunk electronics is calibrated with 1.11 and 11.1 Hz signals.

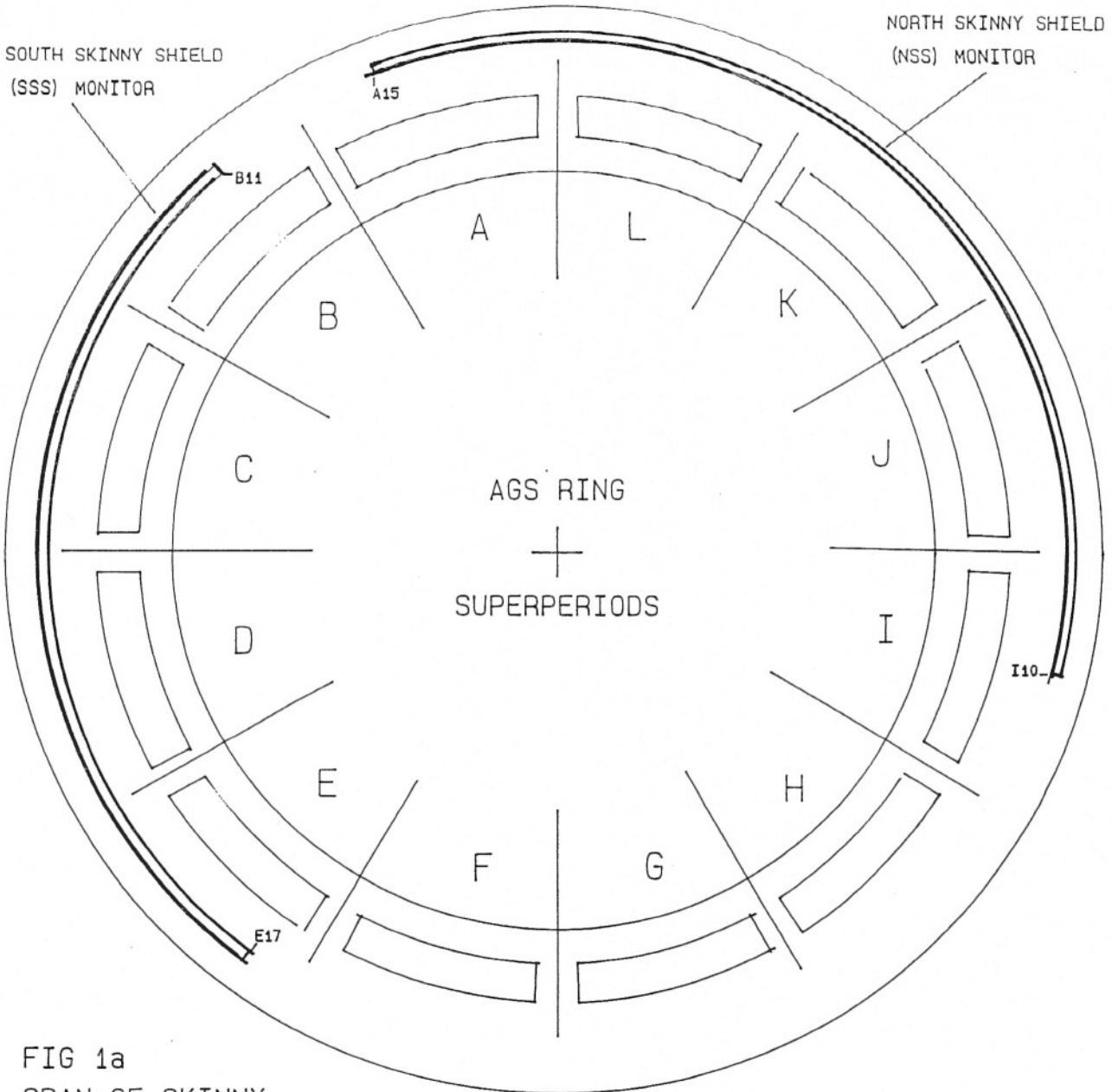

FIG 1a
SPAN OF SKINNY
SHIELD (SS) MONITORS

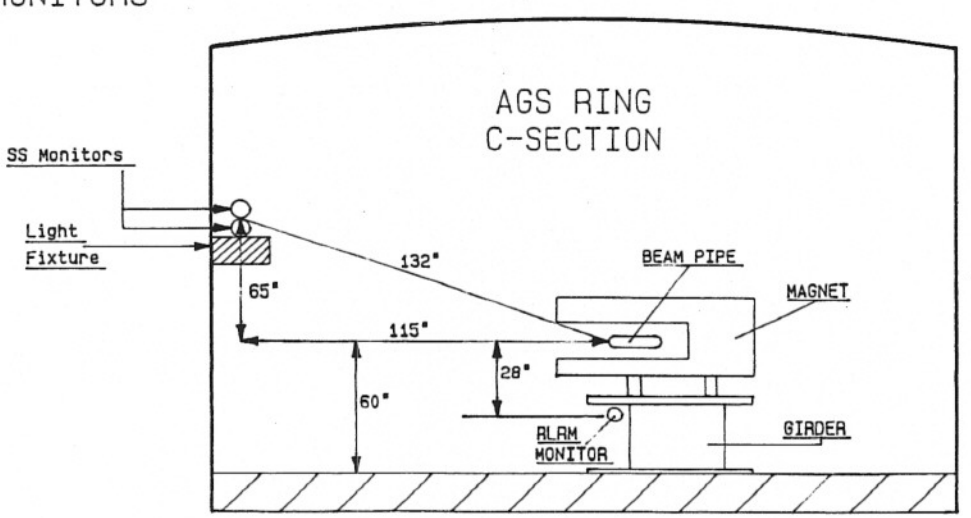

FIG 1b
LOCATION OF
SS MONITORS

The sensitivity of the ionizing chamber is 1.1pC per 2.5urem with the operating bias of 800 volts.

The sensing capability of the Chipmunk is normalized for various types of radiation sources by assigning a Quality Factor (QF) to the various sources. There are 3 QFs: 5, 2.5 and 1 corresponding to the UP, MID and DOWN positions of a 3-position toggle switch on the Digitizer Control board. Electronically the QF settings divide the pulsed output by 1 for QF 5; 2 for QF 2.5 and 5 for QF 1 - note the reverse correspondence.

Circuit Operation (Refer to Fig. 2 Block Diagram of Chipmunk Electronics and Figs. 3 through 6, Ckt. Diags.)

The following is a block description of the circuit operation; a more detailed account is reserved for Appendix-I.

Current from the ionizing chamber is integrated, Fig. 3, to a reference voltage level at which the comparator circuit releases a pulse.

This pulse causes the digitizing circuit, Fig. 4, to generate four pulses:

1) A calibrated reset pulse that starts the next cycle by charging the integrating capacitor positively until charge from the chamber charges it negatively to the trip point.

2) A pulse that keeps the fail-safe circuit enabled.

3) A pulse that limits the upper frequency response of the Chipmunk to approximately 5KHz.

4) A quality factored pulse to the Mux (computer) output; the frequency to voltage circuit and the desensitized output.

The frequency to voltage circuit, Fig. 5, uses various comparator and driver circuits, Fig. 6, to activate local (and remote) warning devices: front panel meter; green, yellow and red lights and a sonalert. These devices facilitate radiation monitoring by personnel.

CHANGES TO ACCOMMODATE THE SKINNY SHIELD MONITORS

The following changes were made to the Chipmunk circuits for skinny shield operation:

1. The integrating capacitor C2 on RP258A, Fig. 3, was changed from 50 to 500pF. The resistor R2 in the reset circuit was changed from 10^8 to 10^7 ohm. These

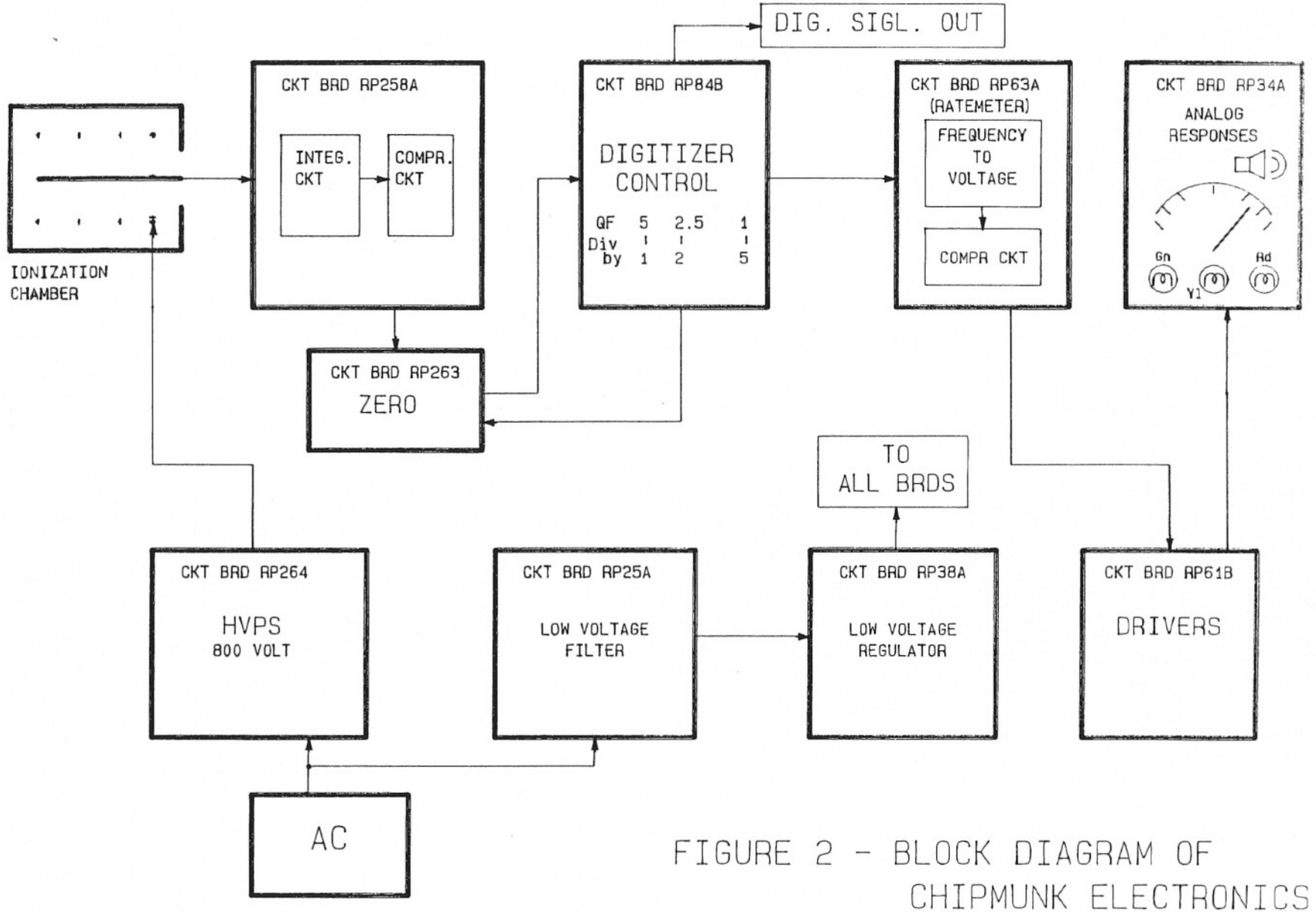

FIGURE 2 - BLOCK DIAGRAM OF CHIPMUNK ELECTRONICS

ENGINEERING NOTE | RAD. PHYS. | CHIPMUNK

SUBJECT: RP258A - INTEGRATOR (SCHEMATIC)
RP263 - ZERO

NAME: [illegible]
DATE: 3-7-80
REVISION DATE:

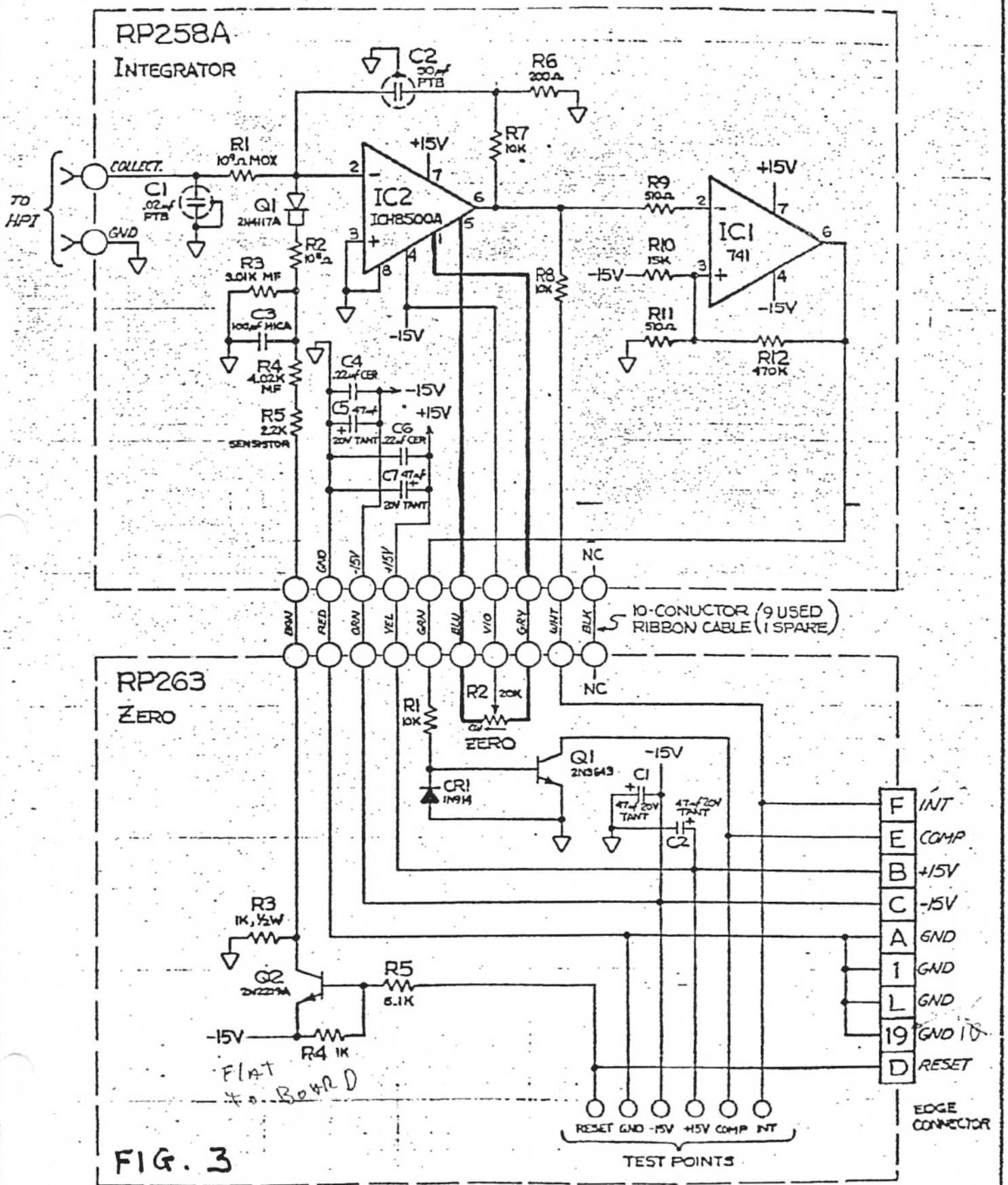

FIG. 3

ENGINEERING NOTE | RAD. PHYS. | CHIPMUNK | SERIAL-CATEGORY | PAGE

SUBJECT

RP84B - DIGITIZER CONTROL (SCHEMATIC)

NAME D. HEITERT

DATE 2-22-80 | REVISION DATE

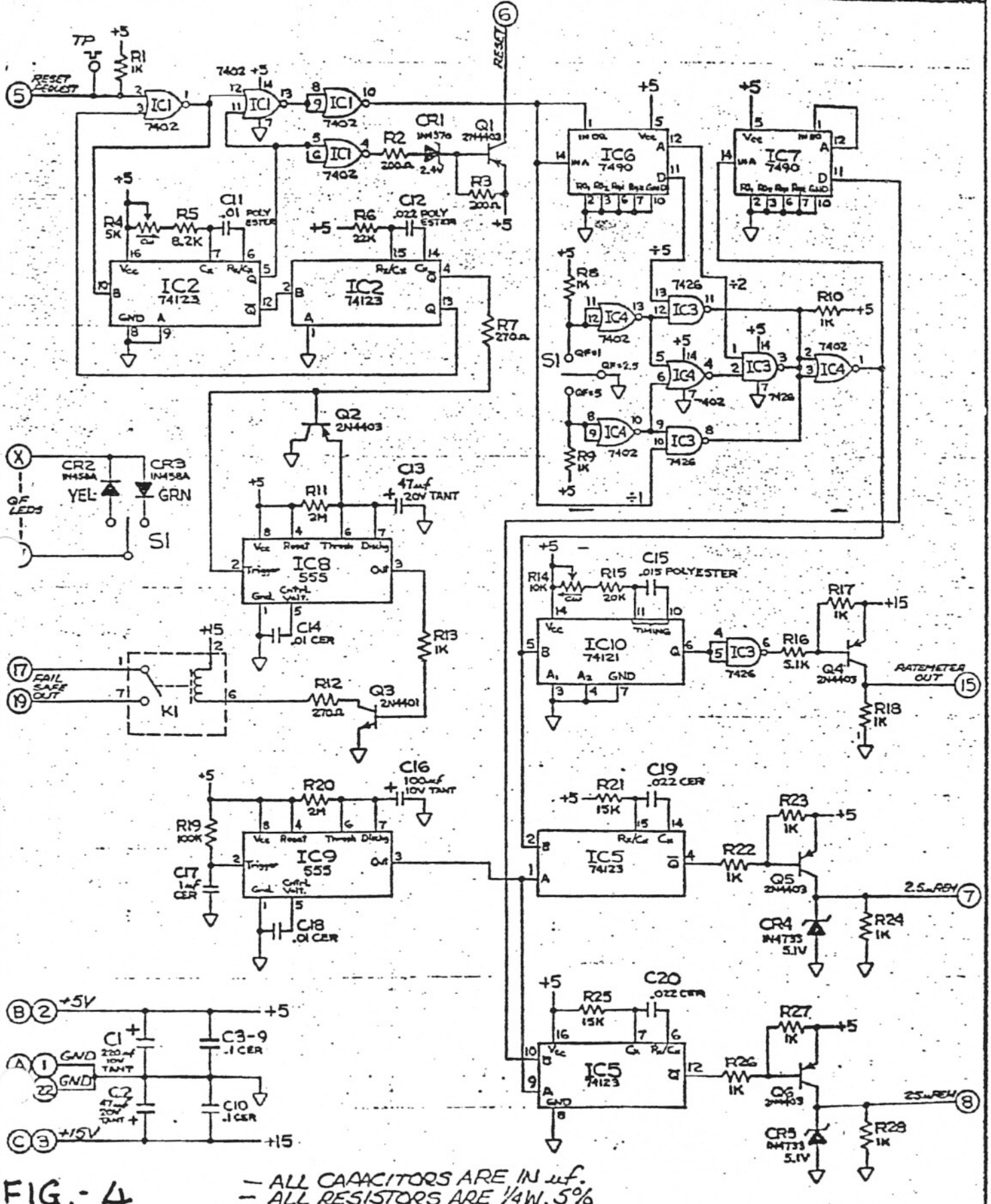

FIG. - 4

— ALL CAPACITORS ARE IN uf.
— ALL RESISTORS ARE 1/4W, 5%

ENGINEERING NOTE | RAD. PHYS. | CHIPMUNK

SUBJECT

RP63A - RATEMETER (SCHEMATIC)

NAME R. HEITERT

DATE 1-30-80 | REVISION DATE

ALL RESISTORS 1/4W, 5% EXCEPT WHERE NOTED

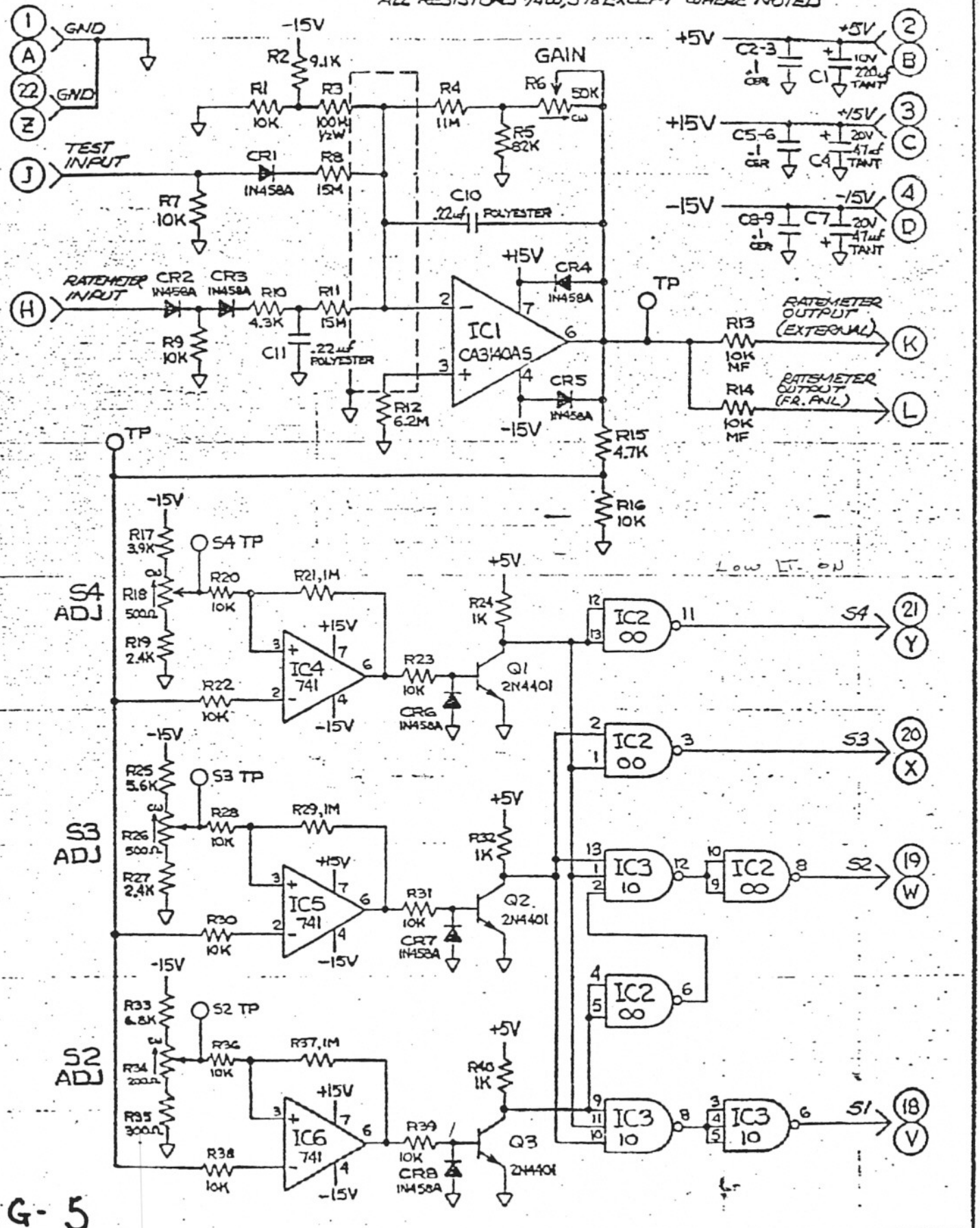

FIG-5

ENGINEERING NOTE | RAD. PHYS. | CHIP[illegible]INK | PAGE

SUBJECT

RP61B - DRIVER (SCHEMATIC)

NAME R. HEITERT

DATE 1-30-80 | REVISION DATE

NOTE: ALL RESISTORS 1/4W, 5% EXCEPT WHERE NOTED

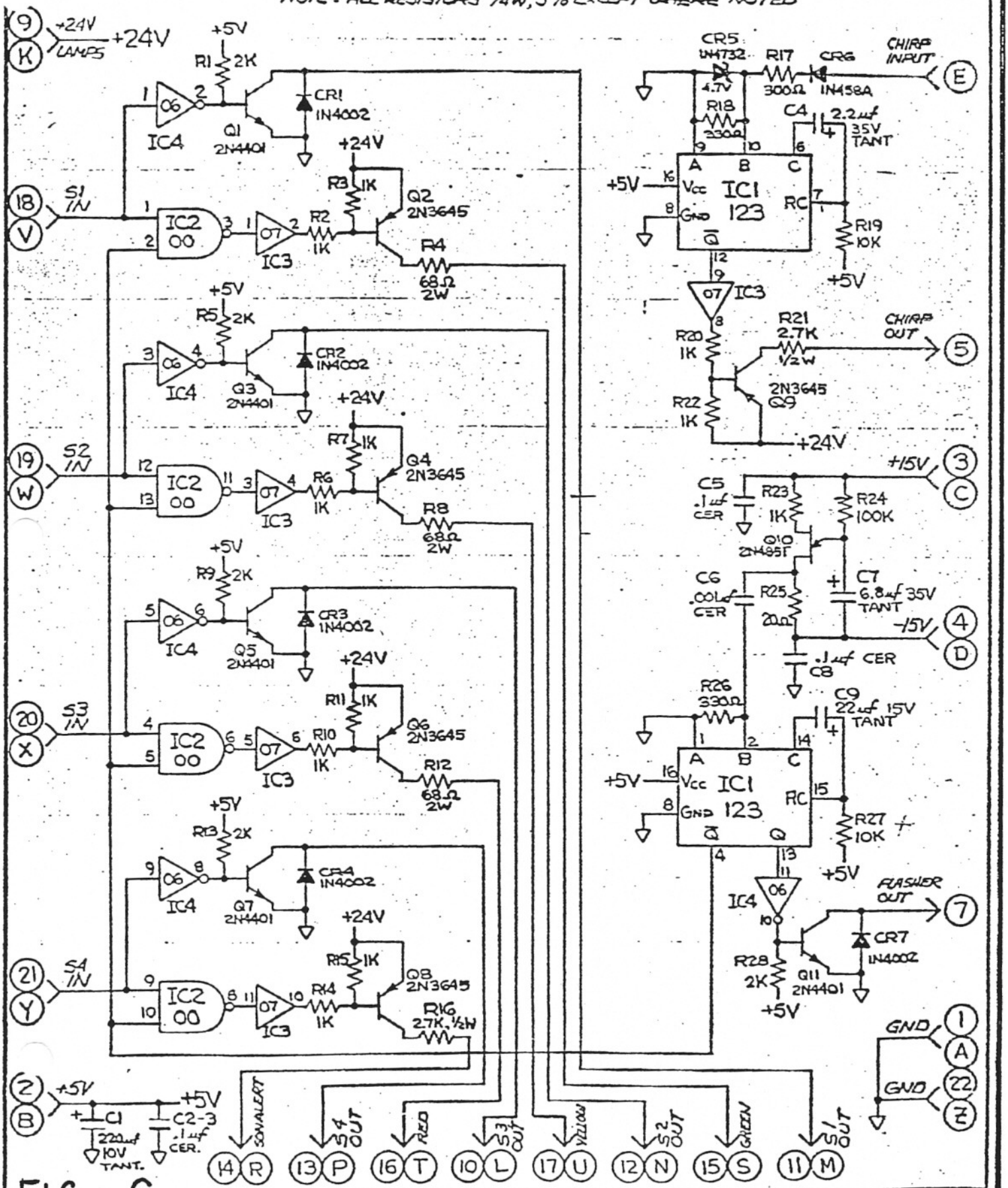

FIG - 6

changes desensitize this circuit by a factor of 10. The capacitor requires more current from the chamber per output pulse and the resistor allows for the greater current needed in the reset pulse.

2. The input pin 5 to IC10 of the Digitizer control, Fig. 4, is routed, Fig. 7a, through selectable divide by 10, 25 and 50 circuits mounted on the Modification Board, Fig. 7. These divide circuits compensate for the Quality Factors 5, 2.5 and 1 respectively and further desensitize the meter movement enabling a trip-point on the range of the meter.

   The Quality Factor settings allow for sensitivity selection depending on the beam intensity - the Skinny Shield system sees only one source-type.

3. The output pin 6, IC1, of the frequency to voltage circuit on board RP63A, Fig. 5, is routed, Fig. 7a, to a comparator circuit on the Modification board and trips the Skinny Shield interlock relay if the set level is exceeded.

4. The 800 volt bias supply is replaced by the 200 volt bias supply of the AGS Ring Loss Radiation Monitor system. The integration of this latter supply into the Skinny Shield system is shown in Fig. 8.

Figure 9 shows a block diagram of the Skinny Shield electronics.

A summary of the desensitization of the Chipmunk circuit is shown in Table 1 below.

Table - 1
Desensitization of the Chipmunk circuits

Input Ckt	Digitizing Ckt			Modification Brd				Meter
Div by:	Q.F.	Switch	Div. by:	Sw1	Sw2	Sw3	Div by:	Desen
10	1	Down	5	Up	Up	Up	10	500
10	2.5	Mid	2	Dwn	Dwn	Up	25	500
10	5	Up	1	Dwn	Up	Dwn	50	500

LAB CALIBRATION OF THE SKINNY SHIELD ELECTRONICS

Refer to Fig. 10. The current into the integrating circuit can be calculated from the input resistor R1, 10^9 ohm, and the battery voltage.

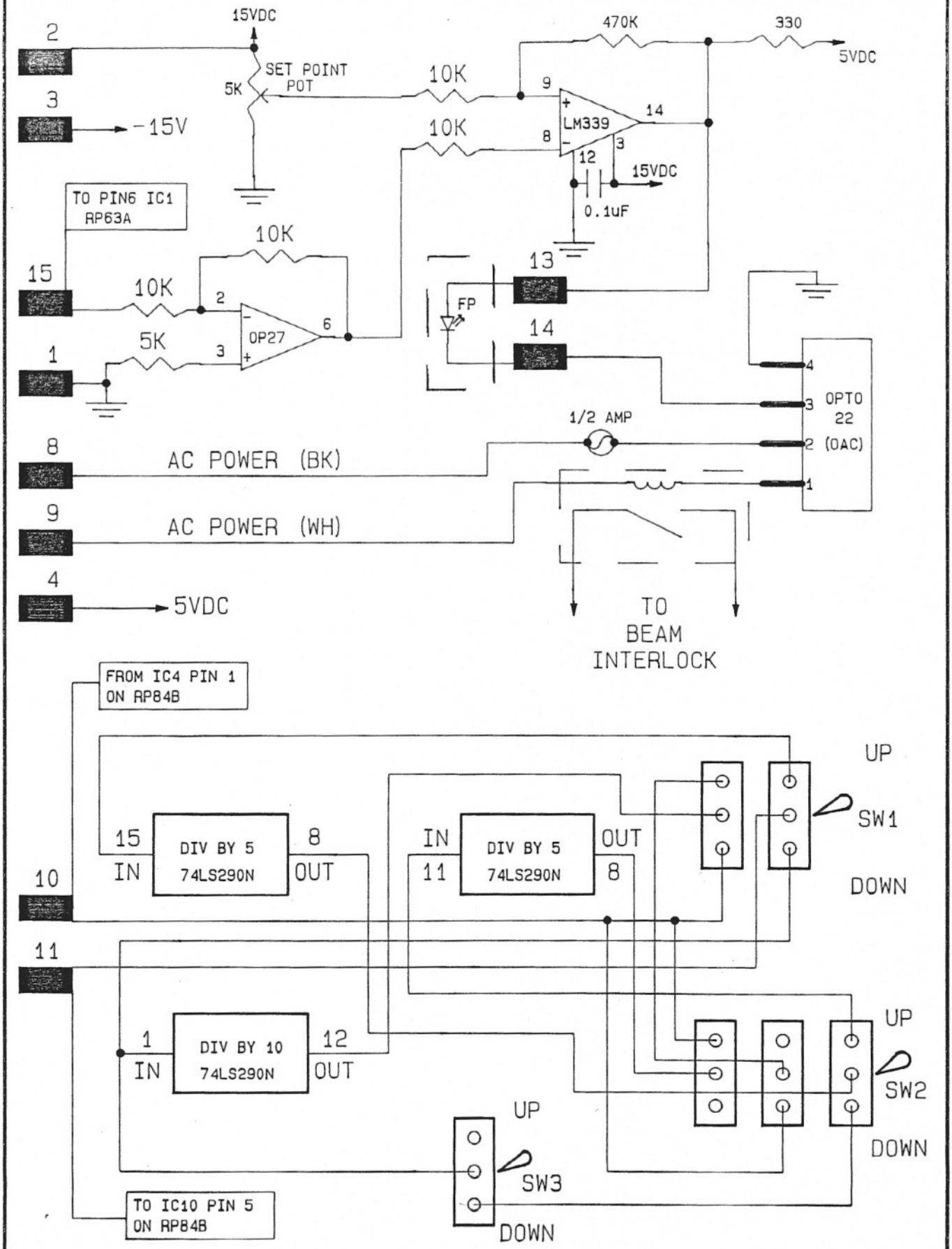

FIG - 7 THE MODIFICATION BOARD

FIG 7a

Integration of the Modification, Digitizer Control and Ratemeter Boards.

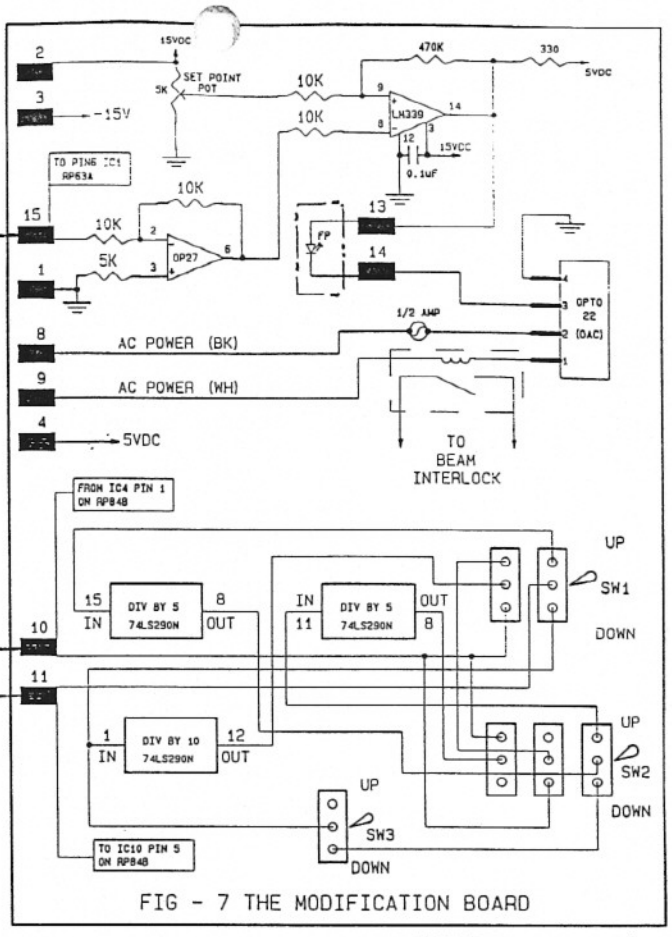

FIG - 7 THE MODIFICATION BOARD

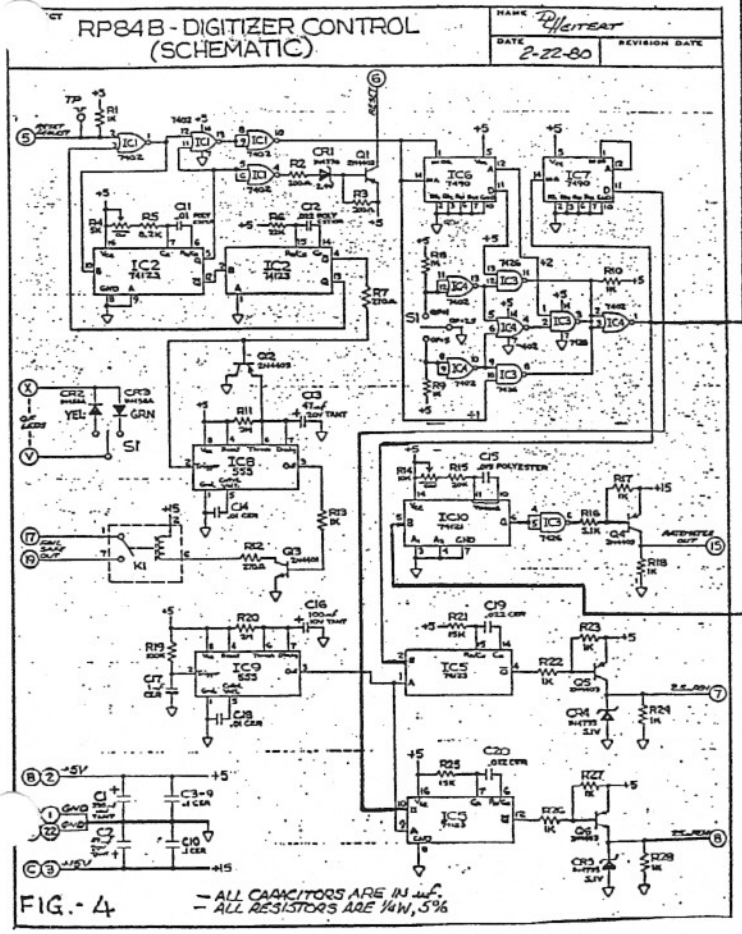

FIG.- 4

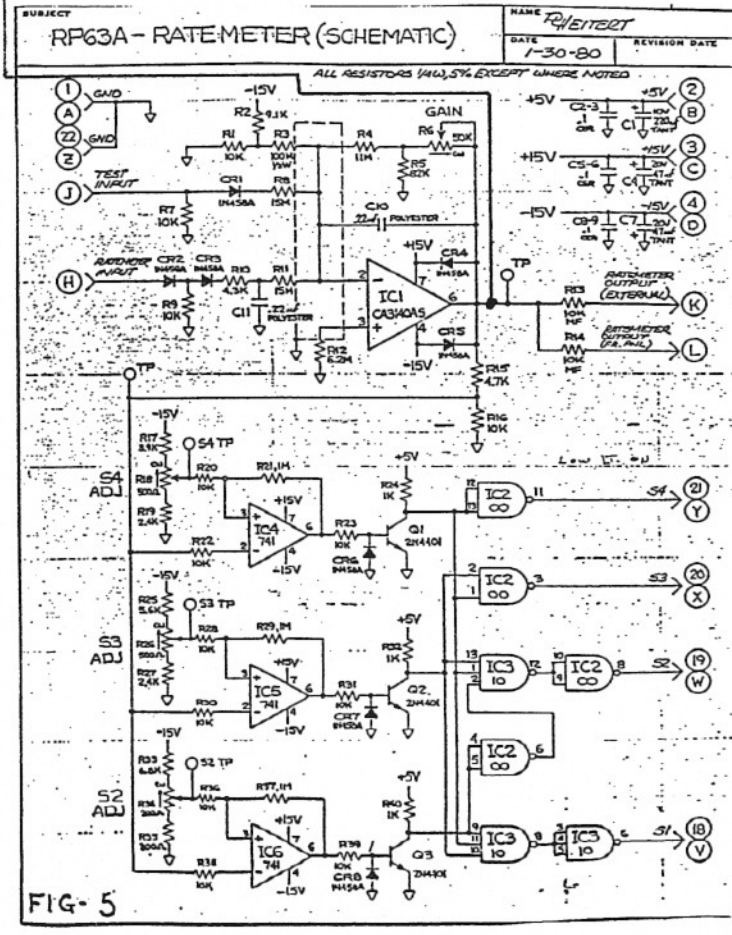

FIG- 5

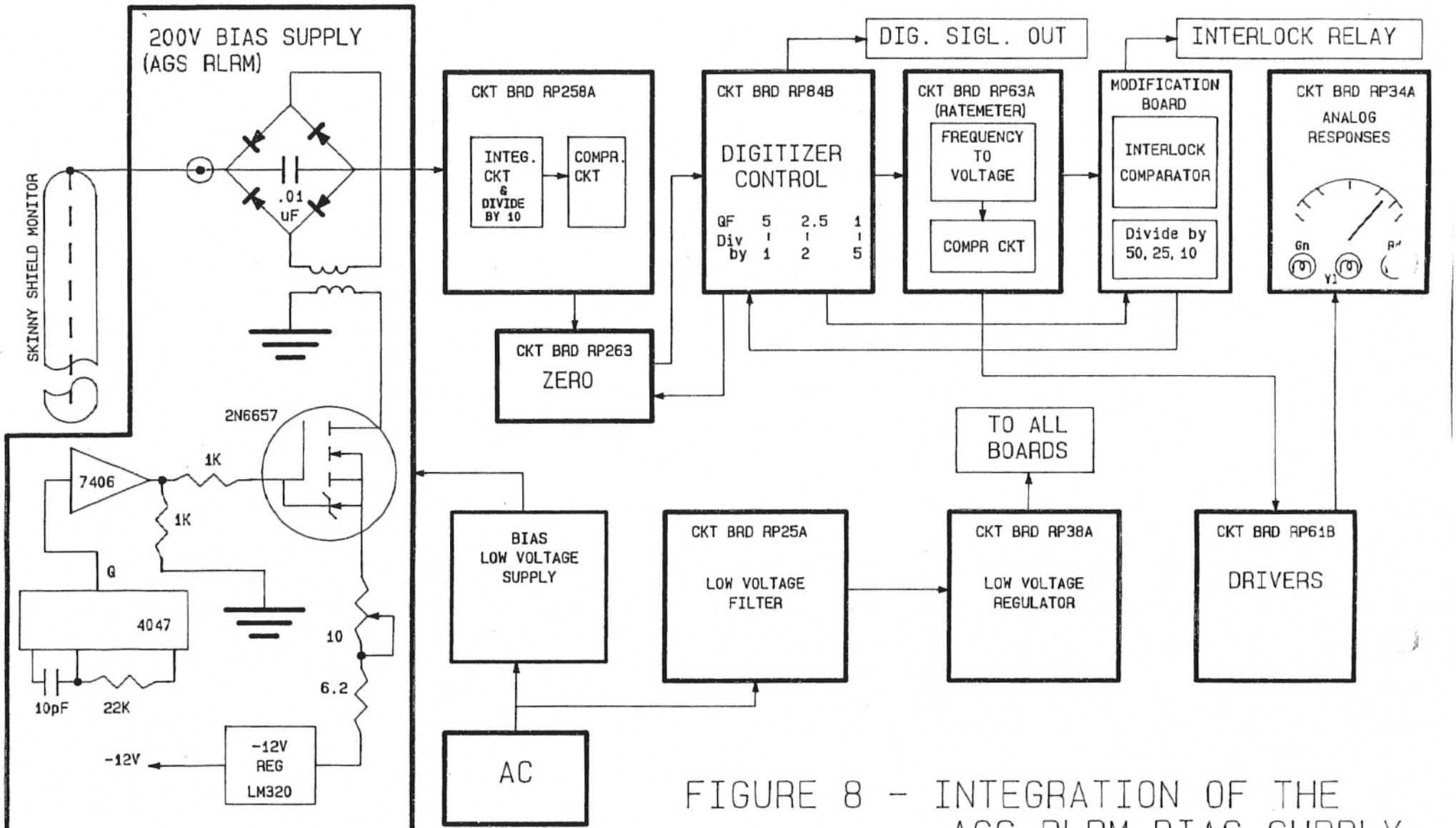

FIGURE 8 - INTEGRATION OF THE AGS RLRM BIAS SUPPLY IN THE SKINNY SHIELD MONITOR SYSTEM

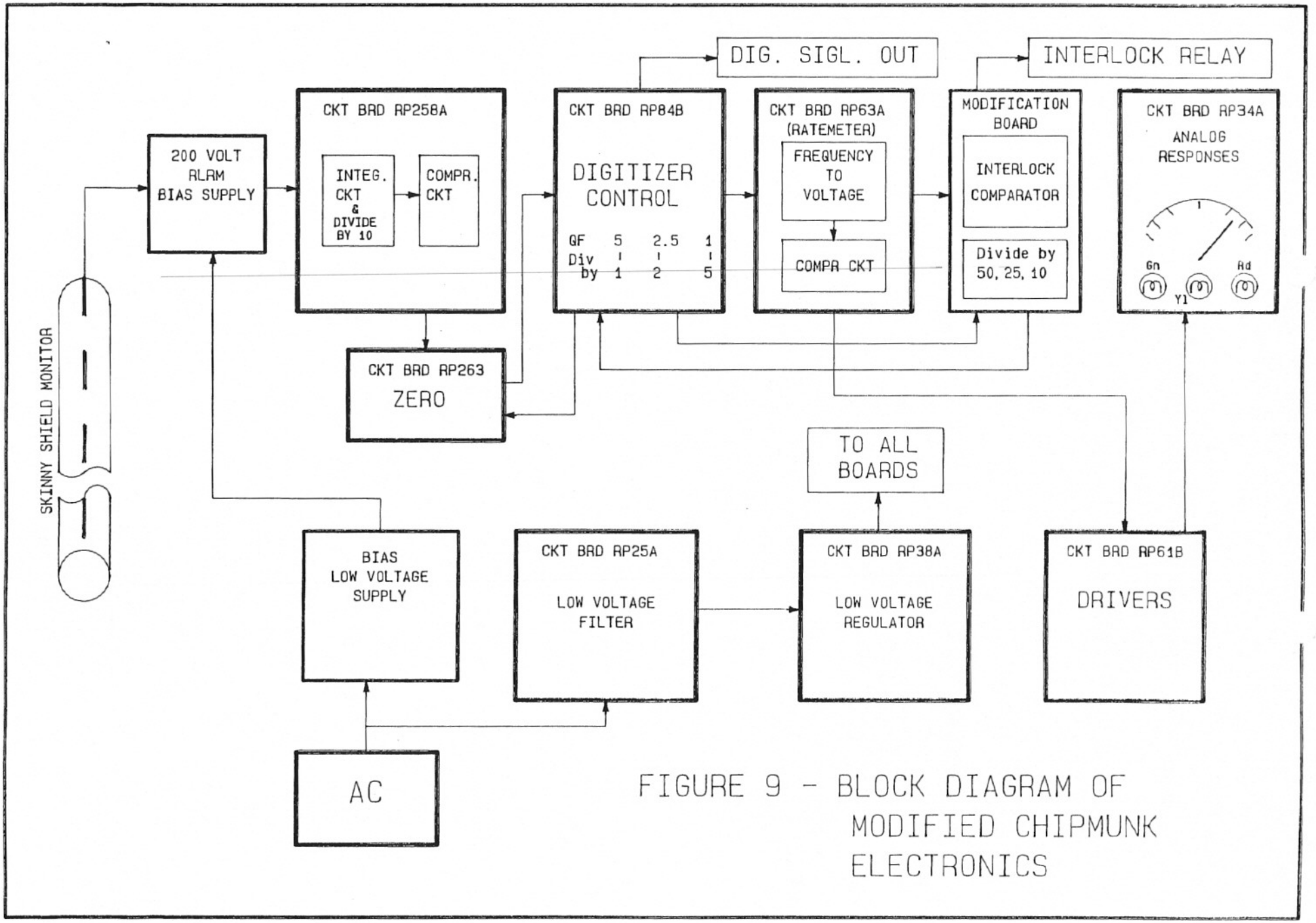

FIGURE 9 - BLOCK DIAGRAM OF MODIFIED CHIPMUNK ELECTRONICS

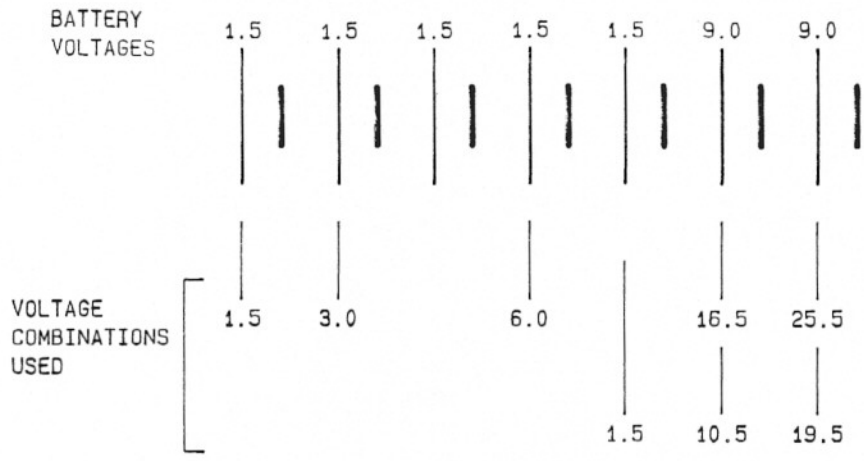

A - VOLTAGE LEVELS FOR LAB CALIBRATION OF SKINNY SHIELD ELECTRONICS

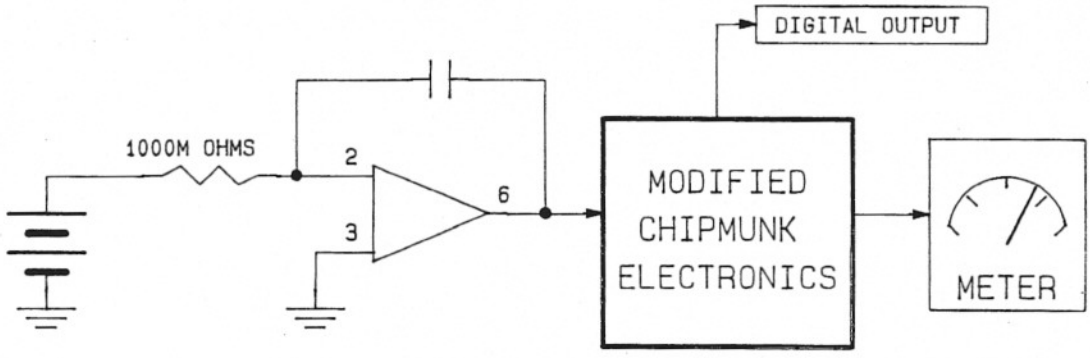

B - LAB CALIBRATION OF SKINNY SHIELD ELECTRONICS

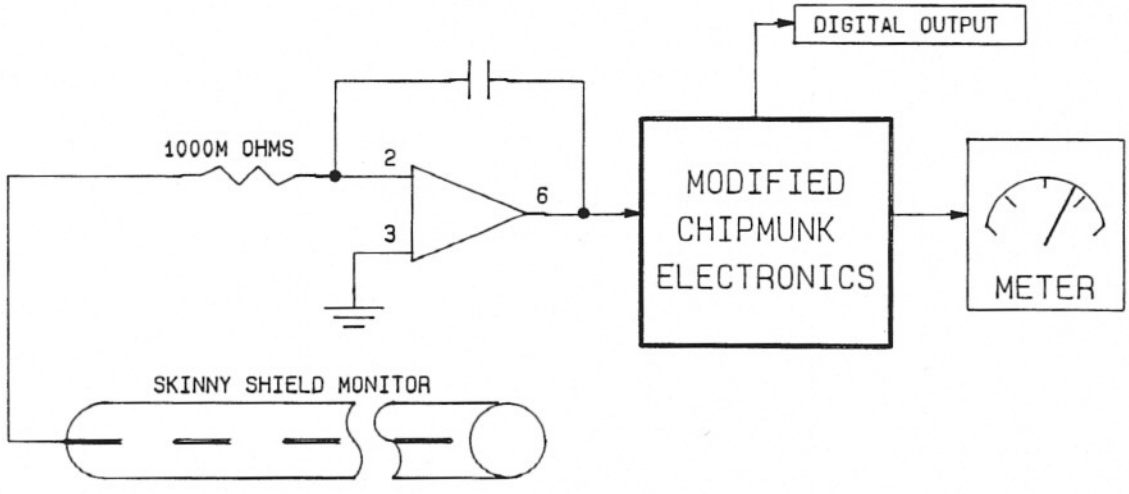

C - CALIBRATION OF THE SKINNYSHIELD MONITOR

FIGURE 10 - CALIBRATION OF SKINNY SHIELD SYSTEM

Batteries were hooked in series to establish a range from 1.5 to 25.5 volts, where only certain values can be accessed; the corresponding current range is 1.5 to 25.5 nAs.

The results of the calibration for the two units, SSS AND NSS are shown in Tables 2 and 3 respectively. The calculated input currents are tabulated against meter readings along with the counts per 100 secs. The calibration was done in the least desensitized condition, QF 5. The corresponding calibration curves: current vs meter readings and current vs counts are shown in Figures 11 and 12.

Table - 2

Lab calibration of South Skinny Shield with QF 5

Vltg/10^9 Ohm = I nAs	Cnts/10 Secs	Cnts/Sec	Meter Rdg.
1.5	104	10.4	0.06
3.0	207	20.7	0.19
6.0	405	40.5	0.38
10.5	761	76.1	0.58
16.5	1168	116.8	0.72
19.5	1419	141.9	0.76
25.5	1827	182.7	0.82

Table - 3

Lab calibration of North Skinny Shield with QF 5

Vltg/10^9 Ohm I = nAs	Cnts/10 Sec	Cnts/Secs	Meter rdg
1.5	123	12.3	0.12
3.0	245	24.5	0.26
6.0	489	48.9	0.46
10.5	900	90.0	0.63
16.5	1389	138.9	0.75
19.5	1680	168.0	0.79
25.5	2171	217.1	0.84

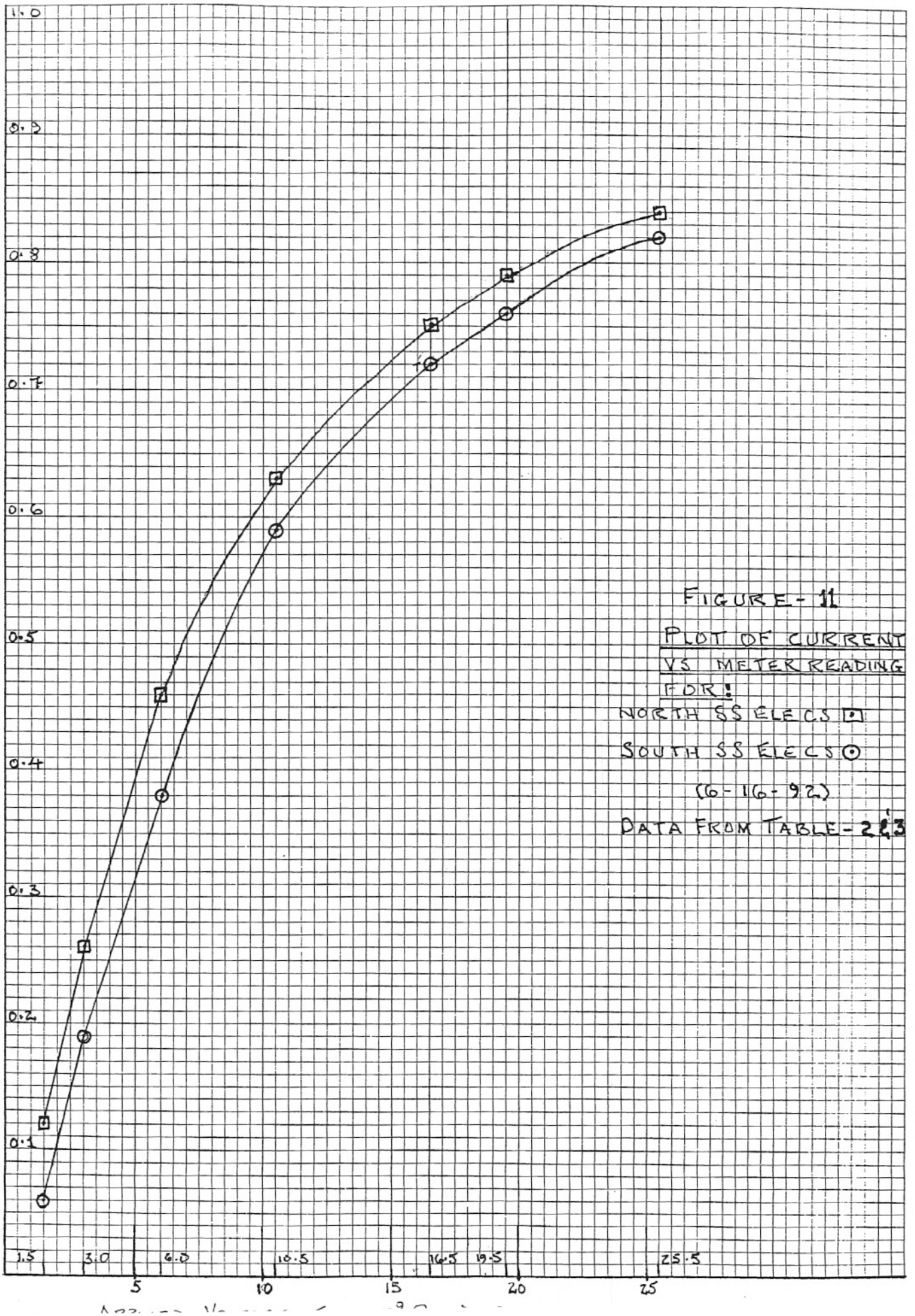

FIGURE - 11

PLOT OF CURRENT VS METER READING FOR:

NORTH SS ELECS ⊡

SOUTH SS ELECS ⊙

(6-16-92)

DATA FROM TABLE - 2&3

FP-LOM-10 X 10 10 1 INCH
10TH LINE HEAVY

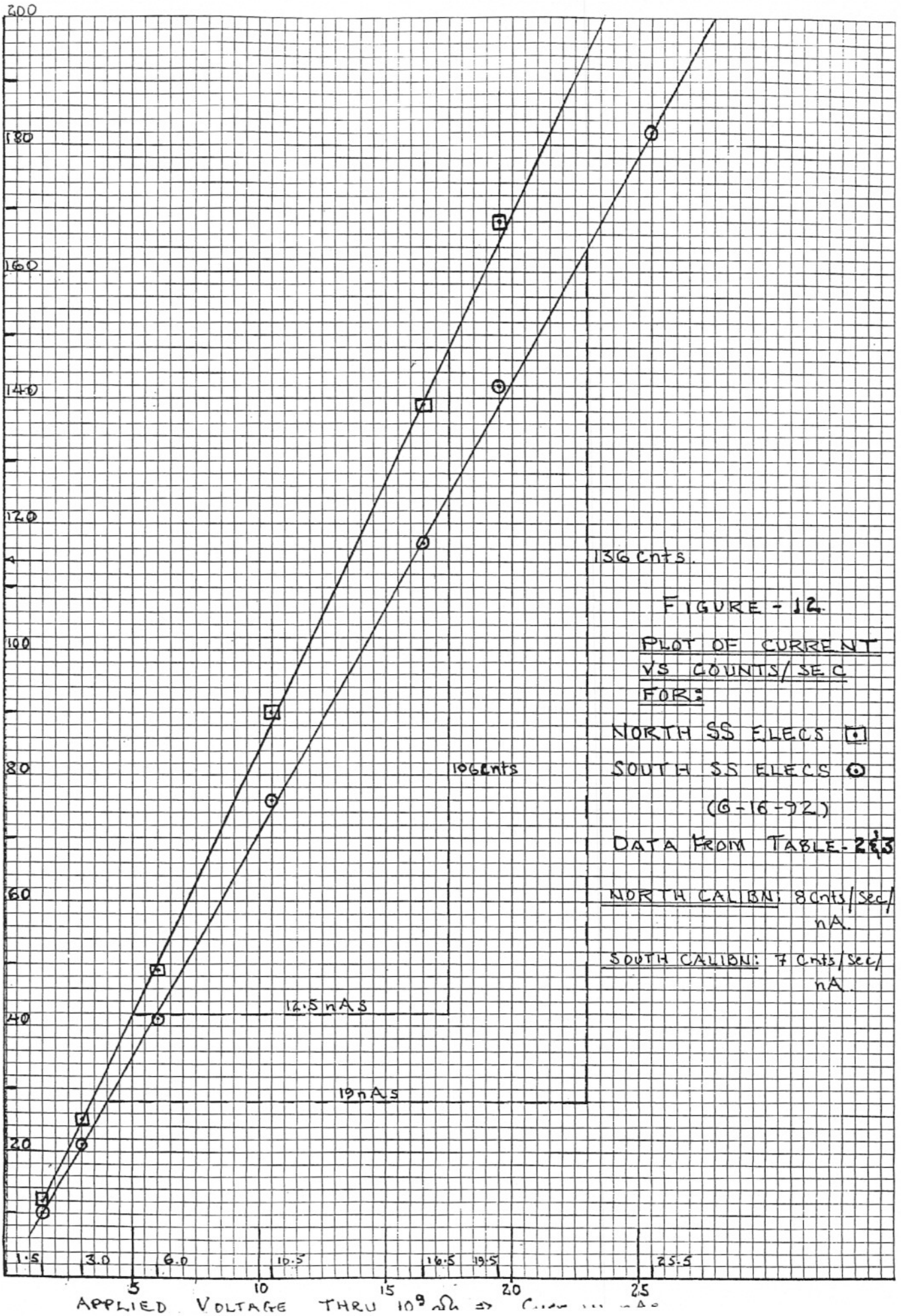

FIGURE - 12.

PLOT OF CURRENT VS COUNTS/SEC FOR:

NORTH SS ELECS ⊡

SOUTH SS ELECS ⊙

(6-16-92)

DATA FROM TABLE-2&3

NORTH CALIBN: 8 Cnts/Sec/nA.

SOUTH CALIBN: 7 Cnts/Sec/nA.

FP1.0M 10 X 10 10 1 INCH
10TH LINE HEAVY

DATA ANALYSIS

From Tables 2 and 3 and corresponding curves Fig. 12, the Lab calibration of the electronics is as follows:

North Skinny Shield - 8 counts/sec/nA.
South Skinny Shield - 7 counts/sec/nA.

The curves for current vs meter reading are exponential because of the meter response. Note that the design does not rely on the meter beyond its range - in the normal Chipmunk or the Skinny Shield operation.

The curves for current vs counts are linear because the counting circuits are linear. The system has an upper limit frequency response of 5KHz set by the jamming circuitry.

The current vs meter readings plots, Fig. 11, can be used to set the trip point for the interlock relay.

BEAM CALIBRATION OF THE SOUTH SKINNY SHIELD SYSTEM

The South Skinny Shield system was calibrated with the beam during Fault Studies #10, 7/20/92 and #13, 8/5/92. The results are presented in Table 4.

Table - 4

Beam calibration of the South Skinny Shield System with QF 5

Beam Intensity		Counts/3.8 Sec per TP/3.8 Sec				
(TP)	GeV/c	So. Sk. Sh.	RLRM	Fault Study #	Ring Area	Berm Top mR/TP
4.7	1.2	184	173	10	D10	3.3
1.2	24.0	1478	2727	10	D10	22.9
5.0	1.2	165	589	13	C15	2.9

NOTES

1. Fault study #10 was done on 7/20/92 and #13 on 8/5/92.

2. In Fault study #10 the beam was crashed against the beam pipe and in #13 it was crashed into the vacuum valve.

3. The "Berm Top" for the D10 measurements was on the road over the berm near the D8 sleeve. For normalization to D10 data the C15 measurements were scaled up by 37% as there is more shielding there.

4. The RLRM counts are included for reference. The geometry of these detectors, Fig. 1b, being close in and shielded by the magnet poles is expected to cause them to have a different loss energy and location response than the Skinny Shield system.

5. The system electronics was set in the most sensitive mode, see row 3 of Table 1.

6. The counts are normalized to the AGS cycle of 3.8 seconds.

DATA ANALYSIS

From Table 4 at **1.2 GeV/c** the South Skinny Shield's (SSS's) response was an average of 185 ($\pm$ 17) counts/3.8secs per TP/3.8secs.

The ratio of interaction at 1.2 and 24.0 GeV/c for the SSS is **1:8**. This matches the ratio **1:8** of radiation level read at the road.

CONCLUSION

The beam test indicates that the Skinny Shield System has a sensitivity that will tolerate beam losses in the AGS and may be used to trigger safety mechanisms. The trip point for the interlock relay can be set in the lab.

APPENDIX - I

CIRCUIT OPERATION OF THE Chipmunk

The circuit operation is presented - components forming functional blocks are isolated.

Input Circuit: (Boards RP258A & RP263, Fig. I-1)

The outer electrode of the ion chamber is positively biased to 800 Volts. Positive ions generated by irradiation of the ionization chamber flow to the center electrode of the chamber to the virtual ground (summing junction) IC2 pin 2.

On first turn-on Ion Chamber current forces IC2 pin 6 negative to -0.5V which causes comparator IC1 to put out a pulse (-15V towards 15V), Fig. I-2. This latter pulls Q1 collector to ground, Fig. I-3, and leaves this circuit as the Comparator output or the reset request. Note that when IC2 (6) is -0.5V, C2 output is -10mV by divider R6, R7.

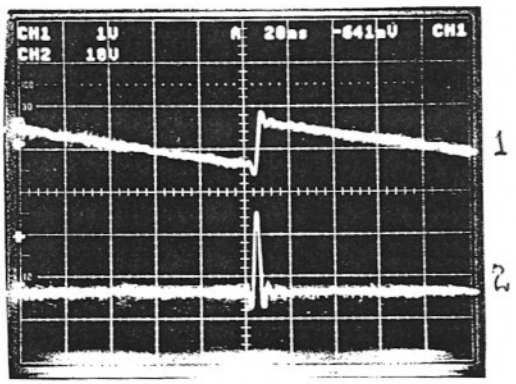

Fig. I-2
1. Output at IC2(6) 1V,20mS/D
2. Output at IC1(6) 10V,20mS/D

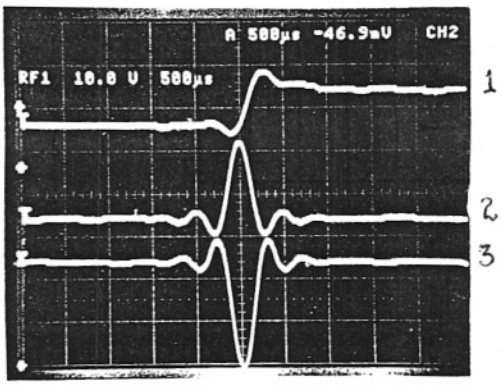

Fig. I-3 (Fig. I-2 expanded)
1. Output at IC2(6) 1V,500uS/D
2. Output at IC1(6) 10V,500uS/D
3. Comparator output at Q1 coll 2V,500uS/D

The comparator output goes to the Digitizer Control circuit (RP84B, described next) which sends a reset pulse back to the input circuit via Q2. This reset pulse width (about 30 uS) is set at calibration and depends on the ionization chamber. The collector of Q2 is held at -14.8V during the reset pulse. R5, R4 and R3 form a voltage-divider such that junction, R2/R3/R4, is approximately -5V. Current from the calibrated reset pulse, Fig. I-4, starts the next cycle by charging C2 to approximately 12mV (IC1(6) is thus 0.6V) until incoming positive charge from the chamber charges it to -10mV; IC1(6) goes to 0.5V the comparator trip point.

FERMILAB ENGINEERING NOTE | SECTION: RAD. PHYS. | PROJECT: CHIPMUNK | SERIAL-CATEGORY | PAGE

SUBJECT: RP258A - INTEGRATOR (SCHEMATIC)
RP263 - ZERO

NAME: D. Heitert
DATE: 3-7-80 | REVISION DATE

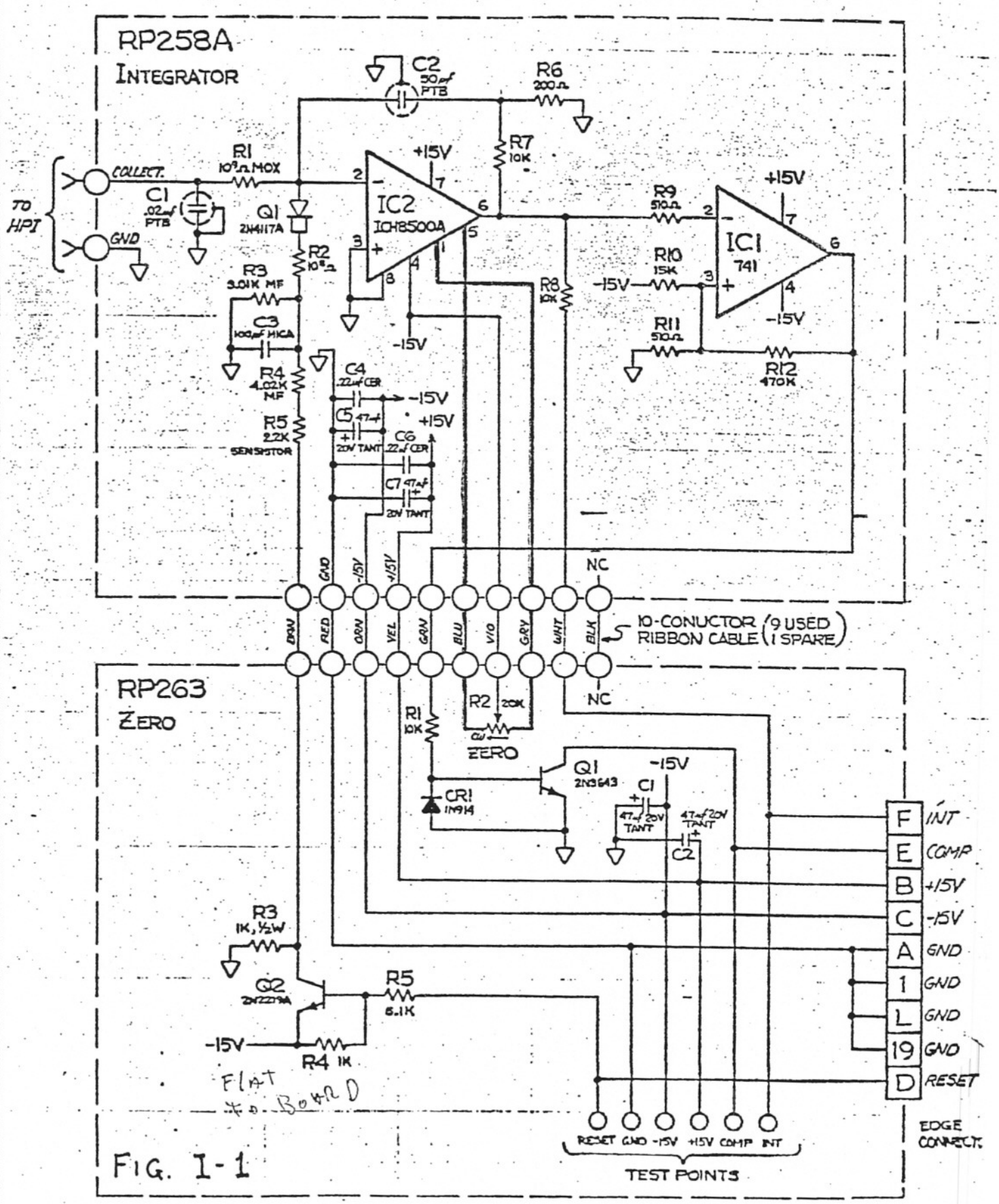

FIG. I-1

Note that C2 gets charged from -10mV to 12mV by the reset current and from 12mV to -10mV by positive charges from the ionization chamber, Fig. I-4.

The reset charging time is fixed at 30uS (width of reset pulse) whereas the charging time for the ionization chamber varies with the current from the chamber. This variation creates the frequency dependence of the output pulse with the incoming charge. However, this frequency is limited to a maximum of 5KHz by a non-jamming or anti-saturating circuit described in the next section.

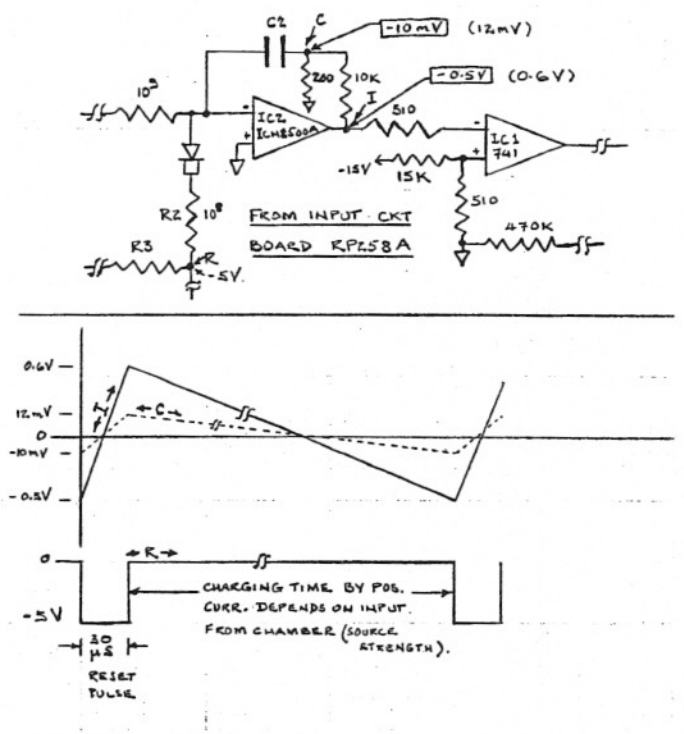

Fig. I-4
I - Integrator output. C - Output of Intg. cap C2. R - Reset pulse at junction R2/R3/R4.

In summary, the cycle: calibrated reset pulse, charge by incoming positive charge from the Ionization Chamber, comparator output pulse continues until the comparator is no longer triggered. The frequency of comparator pulses is proportional to the ionization source hence the measuring capability of the Chipmunk.

Digitizer Control Circuit: (Board RP84B Fig. I-5)

The comparator pulse from the input circuit enters the Digitizer Control circuit at pin 2 of IC1. From there it goes to IC2 where the following is accomplished:

1). By adjusting pot R4 the width of the signal is calibrated against the output of the chamber so that one output pulse from IC1(10) equivocates to 2.5urem (1.1pC) from the chamber. This is part of the calibration procedure of the Chipmunk.

2). IC2 (pin 5) sends a calibrated (width-wise) reset pulse through IC1, CR1 and Q1 to the integrator reset circuit.

3). IC2 (pin 4) sends a pulse to IC8, missing pulse detector, which through Q3 controls the Fail-safe relay K1.

4). IC2 (pin 13) sends a pulse back to IC1 (pin 3), Fig. I-6, holding IC1(3) high for 170uS. Therefore IC1(1) cannot output for at least 200uS after a comparator pulse. This upper limiting frequency of 5KHz precludes the comparator being saturated (jammed high) at high frequencies.

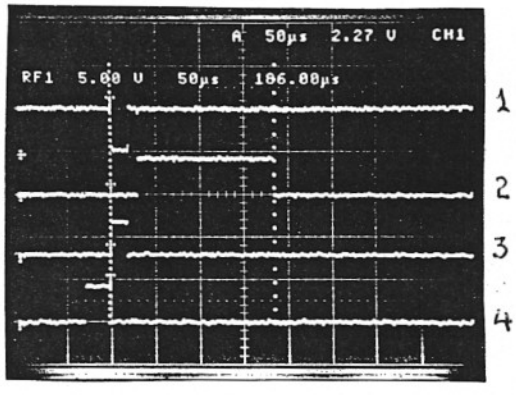

Fig. I-6 5V,50uS/D
1. Comparator sigl. at IC1(2)
2. Non-jamming pulse at IC1(3)
3. Output pulse at IC1(1)
4. Output pulse at IC1(10)

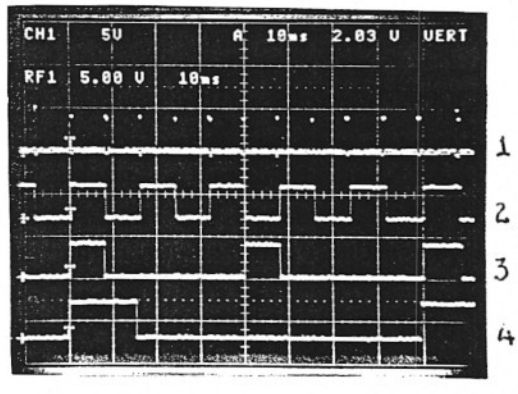

Fig. I-7 5V,50uS/D; same input:
1. Output IC4(1) QF=5, ÷ 1
2. Output IC4(1) QF=2.5, ÷ 2
3. Output IC4(1) QF=1, ÷ 5
4. Output IC7(11) QF=5, ÷ 10

The output from IC1 pin 10 goes to IC6 and IC3. These two combined with IC4 and S1 perform the Quality Factoring of the output pulses, Fig. I-7. This output feeds into IC7, IC10 and IC5; each perform separate functions as follows:

ENGINEERING NOTE | RAD. PHYS. | CHIPMUNK

SUBJECT

RP84B - DIGITIZER CONTROL (SCHEMATIC)

NAME P. HEITERT

DATE 2-22-80

REVISION DATE

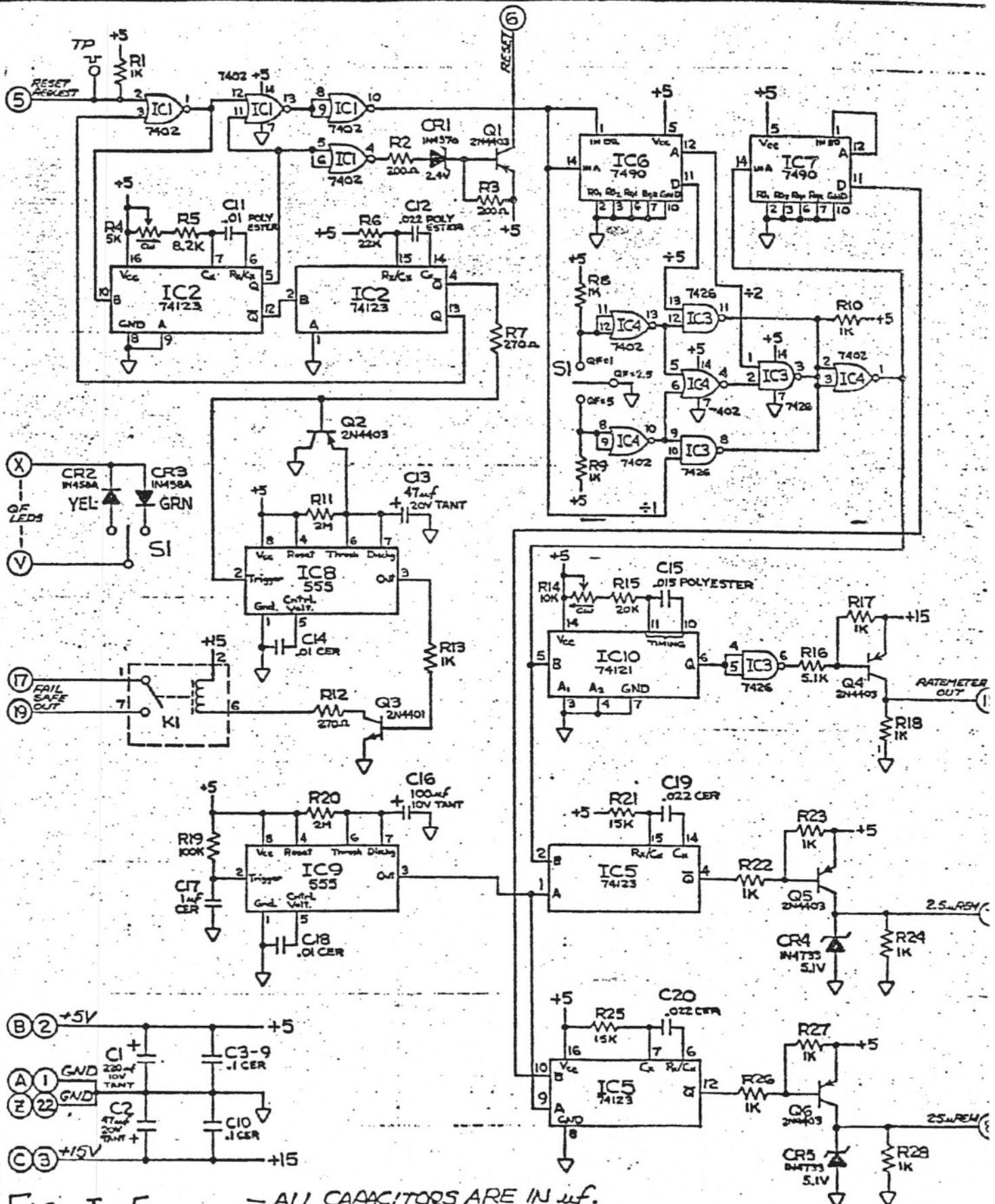

FIG I-5

— ALL CAPACITORS ARE IN μf.
— ALL RESISTORS ARE ¼W, 5%

1). IC10 through IC3 and Q4 sends the Quality Factored pulse to the Ratemeter Board (RP63A) where it is processed for Personnel monitoring.

Pot R14 on IC10 functions with pot R6 of the Ratemeter Board which is described below.

2). IC5 and Q5 sends the Quality Factored pulse to the Mux output (BNC) connector and to the Driver Board (RP61B) where it is used for emitting a chirp for each pulse. IC9 is an inhibit circuit that suppresses the Chipmunk output for the first 3 minutes, partially captured Fig. I-8, after powering the Chipmunk. This is necessary because the Ion Chamber charges to 800V on turn-on and generates current to the input circuit; the system is allowed to "settle-down" before formal operation.

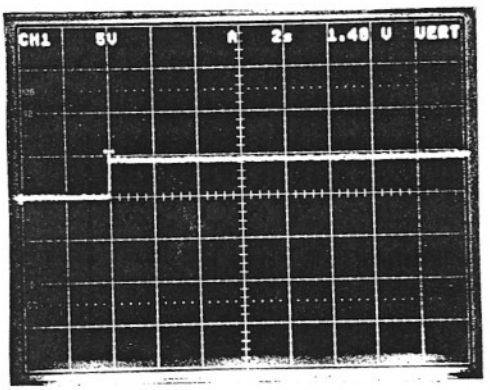

Fig. I-8. Inhibit pulse partially captured, IC9(3), 5V,2S/D

3). IC7 through IC5 and Q6 provide a special desensitized output, Fig. I-7, of 25 urem/hr per pulse to an external connector. This provides for remote monitoring by computer, etc. This circuit is also inhibited by IC9.

Ratemeter Circuit: (Board RP63A, Fig. I-9)

Quality Factored pulses from the Digitizer Control enter the Ratemeter circuit through the network: CR2, R9, CR3, R10 and C11 which conditions the input and converts it from frequency to voltage which is applied to the summing junction of IC1 through R11.

The network R1, R2, and R3 pegs the meter negatively for zero input. Pot R6 along with pot R14 on the Digitizer Control Board, RP84B, are adjusted iteratively to calibrate the meter scale at the 10mrem/hr and 100mrem/hr levels.

This system behaves pseudo-logarithmically because network R9-C11 response decreases with increasing frequency and the output of IC1 has the rail voltage as an upper limit.

ENGINEERING NOTE | RAD. PHYS. | CHIPMUNK

SUBJECT

RP63A - RATEMETER (SCHEMATIC)

NAME R. HEITERT

DATE 1-30-80 | REVISION DATE

ALL RESISTORS 1/4W, 5% EXCEPT WHERE NOTED

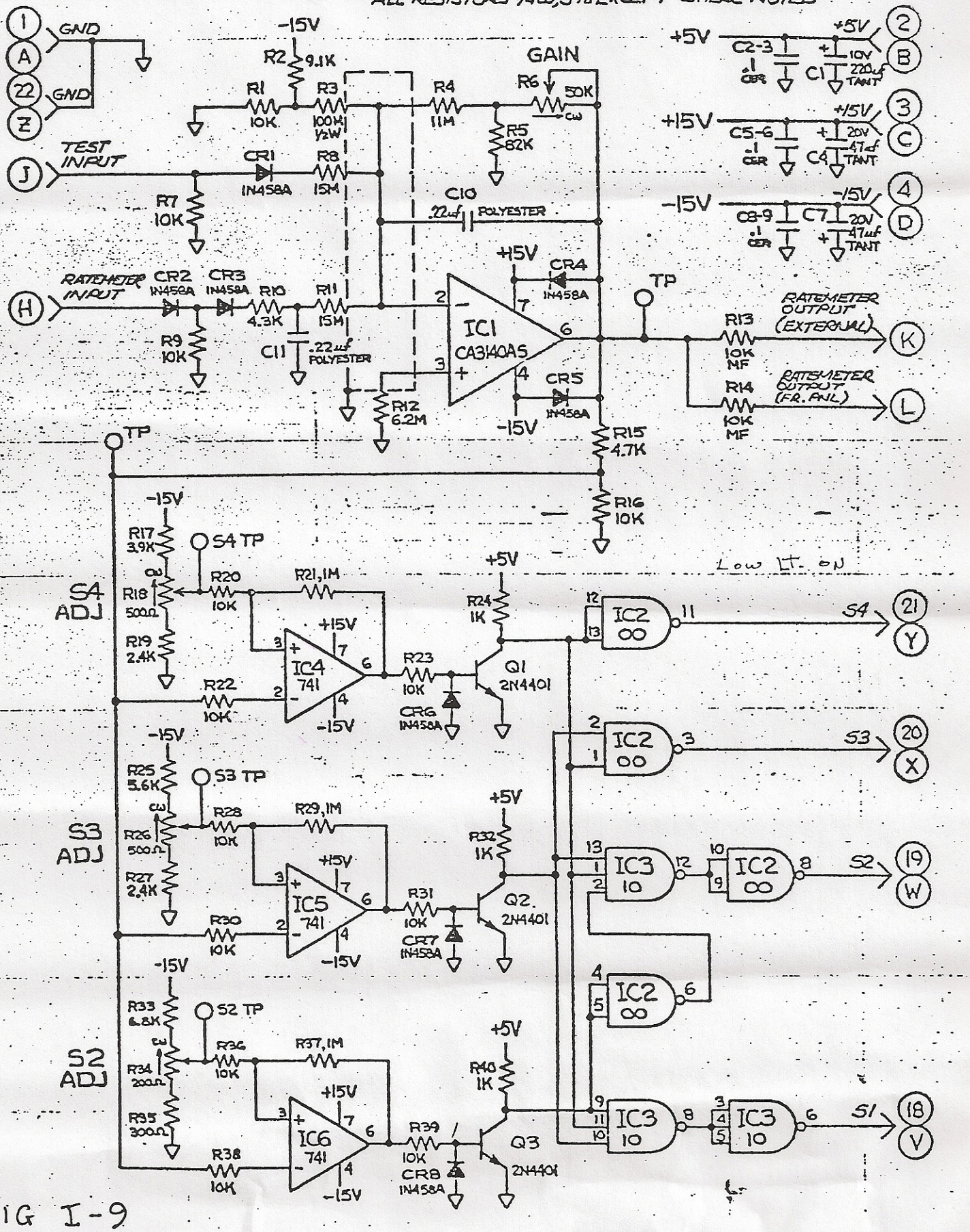

FIG I-9

IC1 drives the panel meter and comparators IC4,5,6 which control the activation levels for the sonalert, and the indicator lights: red, yellow and green. The outputs from IC4,5,6 go through IC2,3 to the Driver board RP61B.

Driver Circuit: (Board RP61B, Fig. I-10)

This board provides drivers for: the flashing light indicators and the sonalert on the Chipmunk; parallel flashing (pulsating) and other non-pulsating outputs on the external Cannon connector for remote use.

IC2,3 and Q2,4,6,8 drive the green, yellow, red flashing lights and the sonalert respectively along with their parallel counterparts to the Cannon connector. The repetition rate for these indicators is provided by Unijunction oscillator Q10 (output detected with scalar) and IC1 (pin 4).

IC4 and Q1,3,5,7 drive the non-pulsating outputs on the Cannon connector.

The sonalert is also independently driven by the chirp out (1 chirp for every 2.5urem/hr seen by the ionizing chamber) driver which is the combination of IC1 (pin 12), IC3 and Q9.

HVPS - 800V Circuit: (Board RP264, Fig. I-11)

This board provides the 800 volts that biases the outer electrode of the Ionization chamber. The 800 volts is maintained by the Voltage regulator tube VR1 and the circuit: IC1; CR6,7; C4,5; R9,10,11. The zener CR5 is for protection.

Low Voltage Regulator: (Board RP38A, Fig. I-12)

This board provides the regulated 15V, -15V and 5V, using voltage regulators IC1,3, 2 respectively from unregulated inputs of 24V, -24V and 8V.

Low Voltage Filter: (Board RP25A, Fig. I-13)

This board receives 36VAC and 6.3VAC and through rectification networks: CR1, C1,2 and CR2,3,4,5, C3 provide unregulated $\pm$ 22V and 8V respectively. R1 is a load dropping resistor for the lamps.

Meter/Front Panel Assembly: (Board RP34A, Fig. I-14)

The front panel Meter is mounted on this board which also provides power to the sonalert and the quality factor leds. The sonalert and the quality factor leds are mounted on front panel.

ENGINEERING NOTE | RAD. PHYS. | CHIPMUNK

SUBJECT

RP61B - DRIVER (SCHEMATIC)

NAME DHEITERT

DATE 1-30-80

REVISION DATE

NOTE: ALL RESISTORS 1/4W, 5% EXCEPT WHERE NOTED

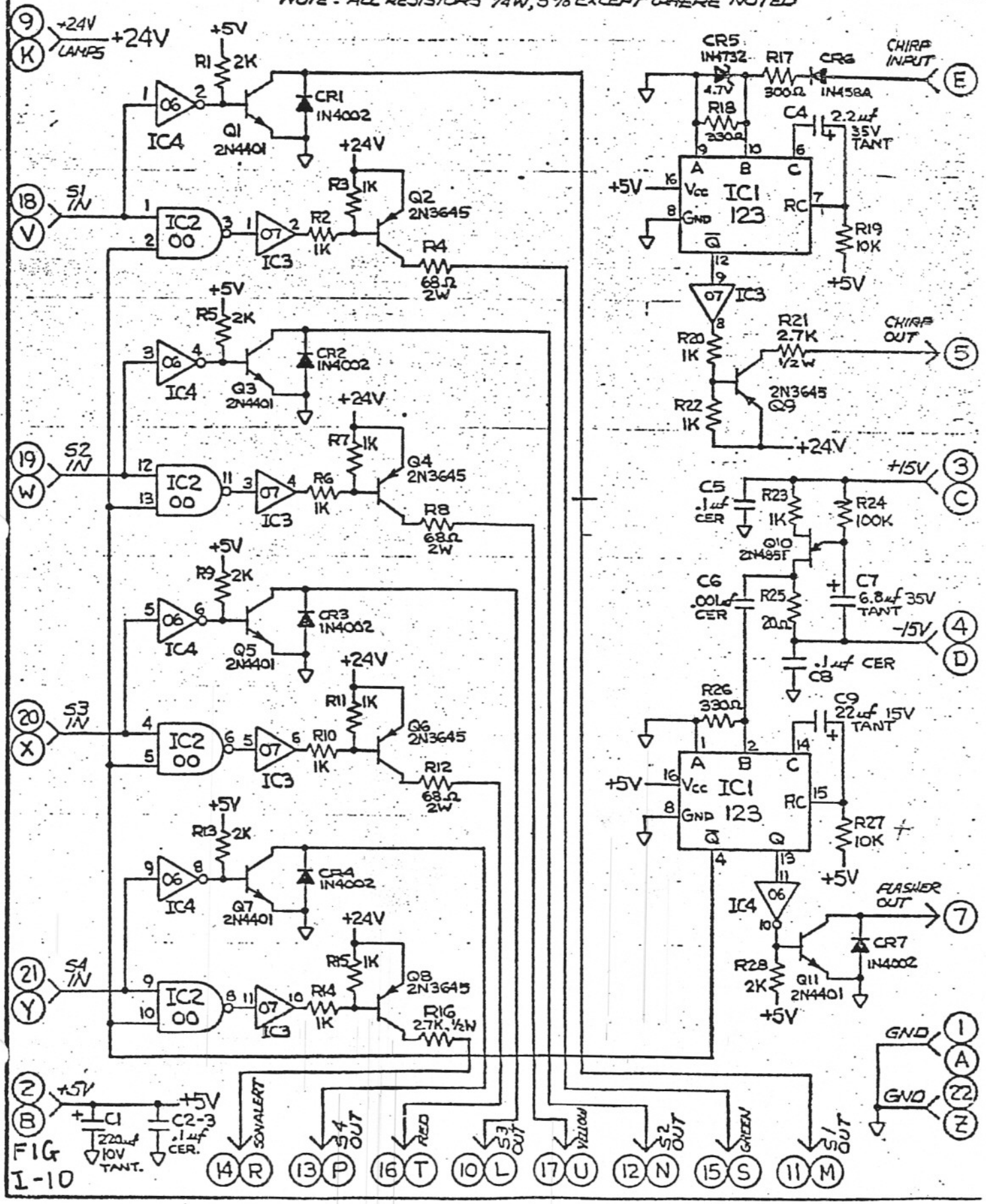

FIG I-10

ENGINEERING NOTE | RAD. PHYS. | CHIPMUNK.

SUBJECT

RP264 - HVPS 800V (SCHEMATIC)

NAME RPH

DATE 2-20-80 | REVISION DATE

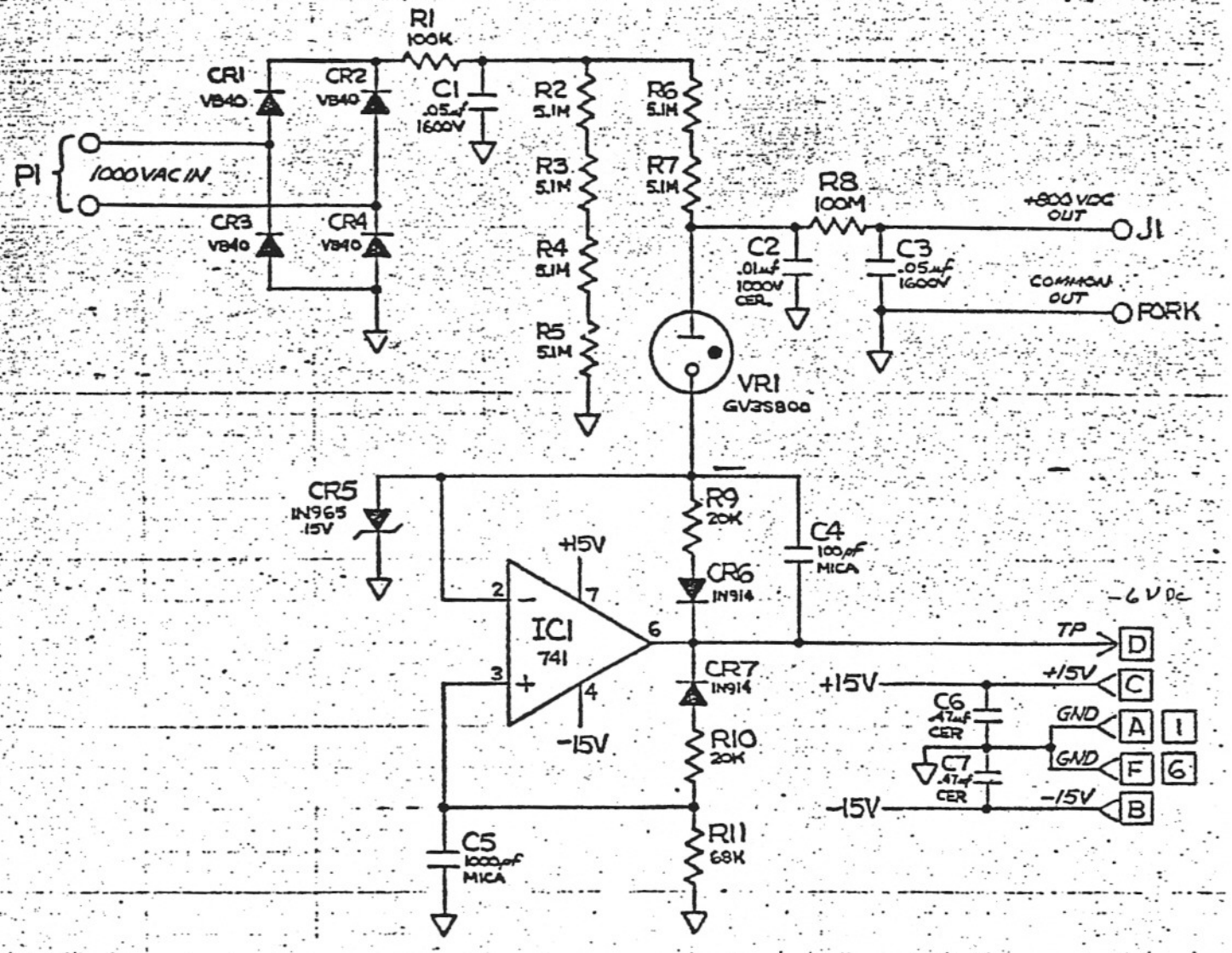

NOTE: RESISTORS ARE 1/2W, 5%

FIG I-11

FERMILAB ENGINEERING NOTE

SECTION	PROJECT	SERIAL-CATEGORY	PAGE
RAD. PHYS.	CHIPMUNK		

SUBJECT: RP38A - LOW VOLTAGE REGULATOR (SCHEMATIC)

NAME: P. HEITERT

DATE:

REVISION DATE:

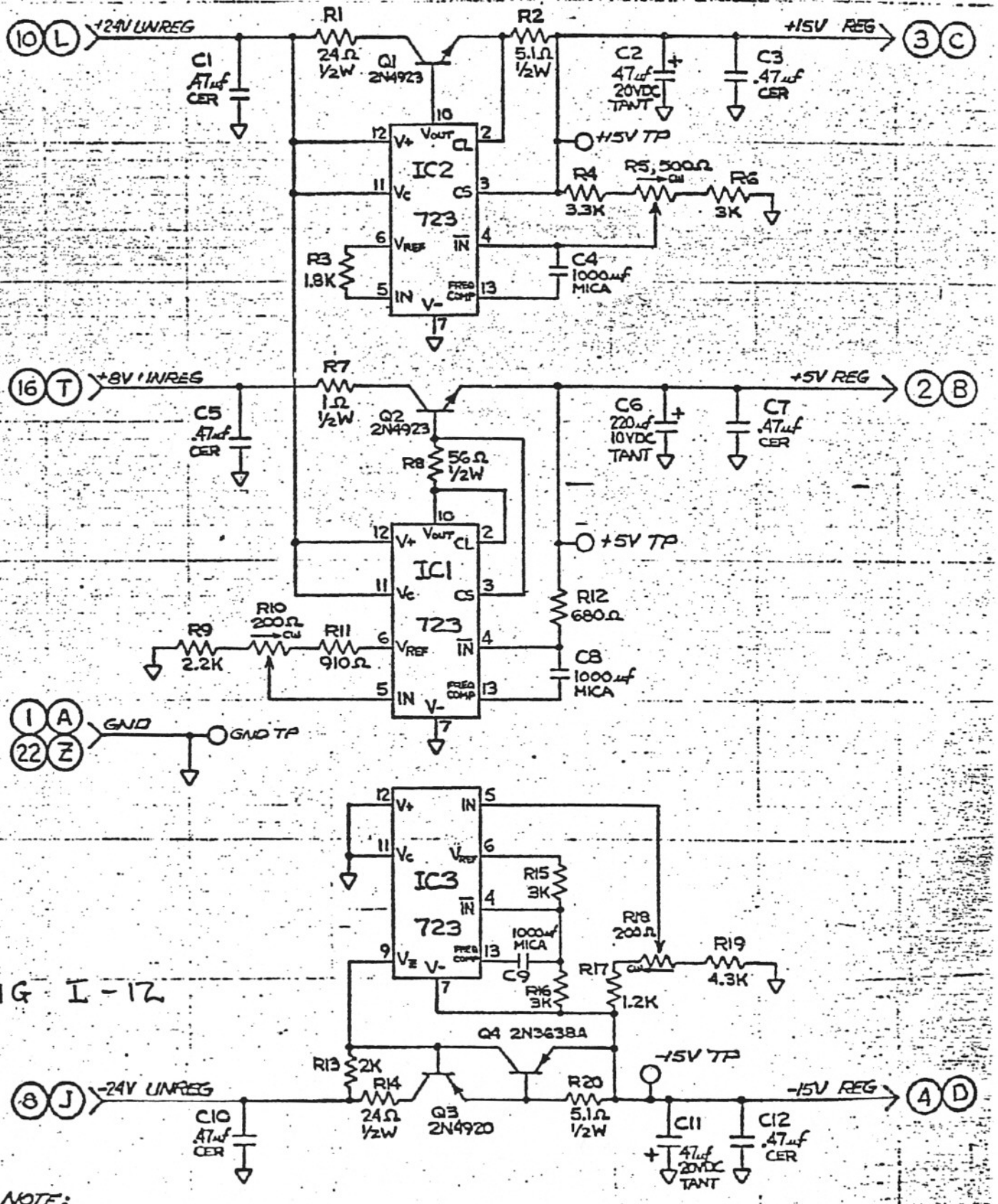

FIG I-12

NOTE:

ALL RESISTORS 1/4W, 5% EXCEPT WHERE NOTED

FERMILAB

ENGINEERING NOTE

SECTION	PROJECT	SERIAL-CATEGORY	PAGE
RAD. PHYS.	CHIPMUNK		

SUBJECT

RP25A-LOW VOLTAGE FILTER (SCHEMATIC)

NAME	DATE	REVISION DATE
D. HEITERT	1-29-80	

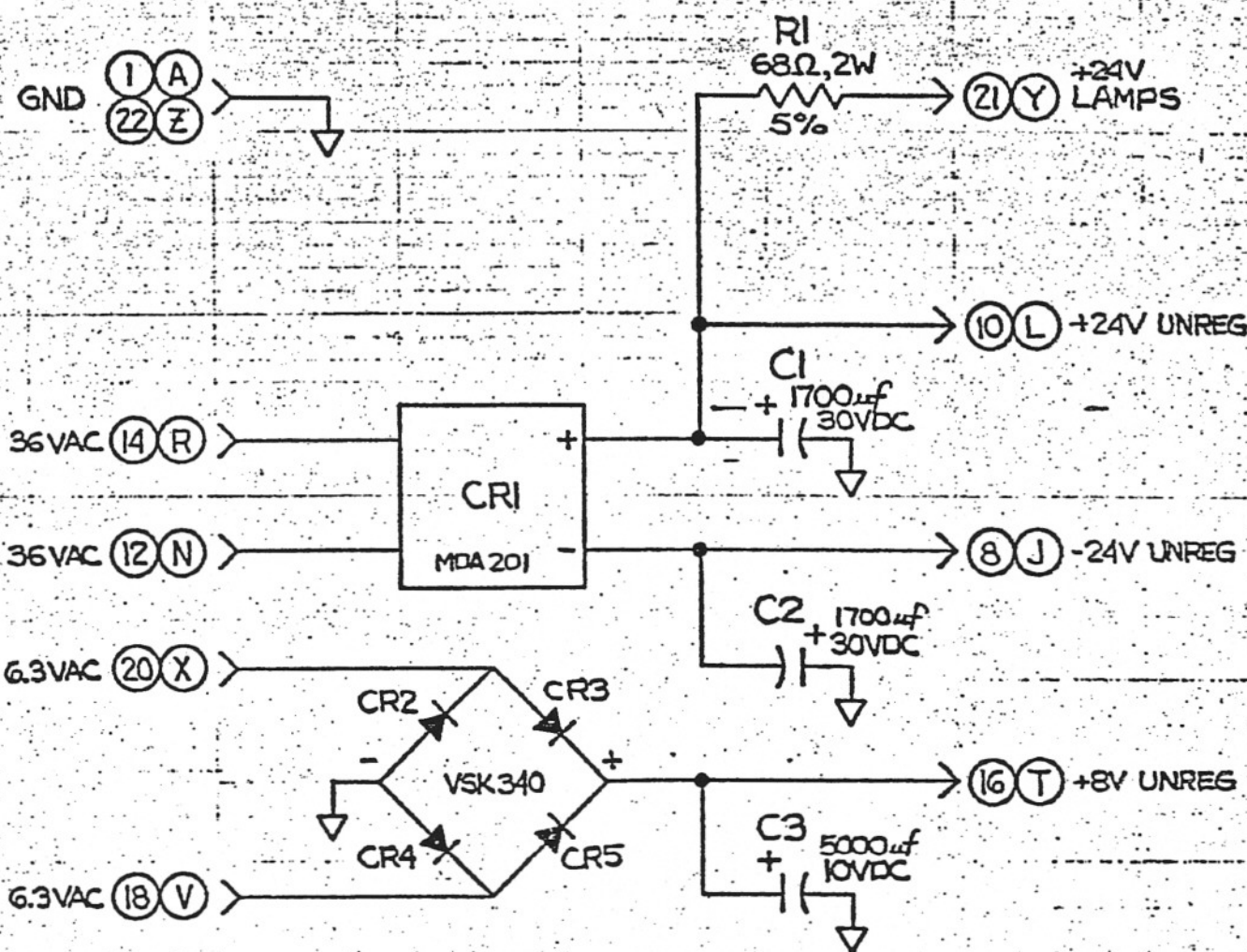

FIG I-13

FERMILAB

ENGINEERING NOTE | SECTION: RAD. PHYS. | PROJECT: CHIPMUNK | SERIAL-CATEGORY | PAGE

SUBJECT: RP34A - METER/ FRONT PANEL ASSY (SCHEMATIC)

NAME: DH

DATE: 4-8-80 | REVISION DATE

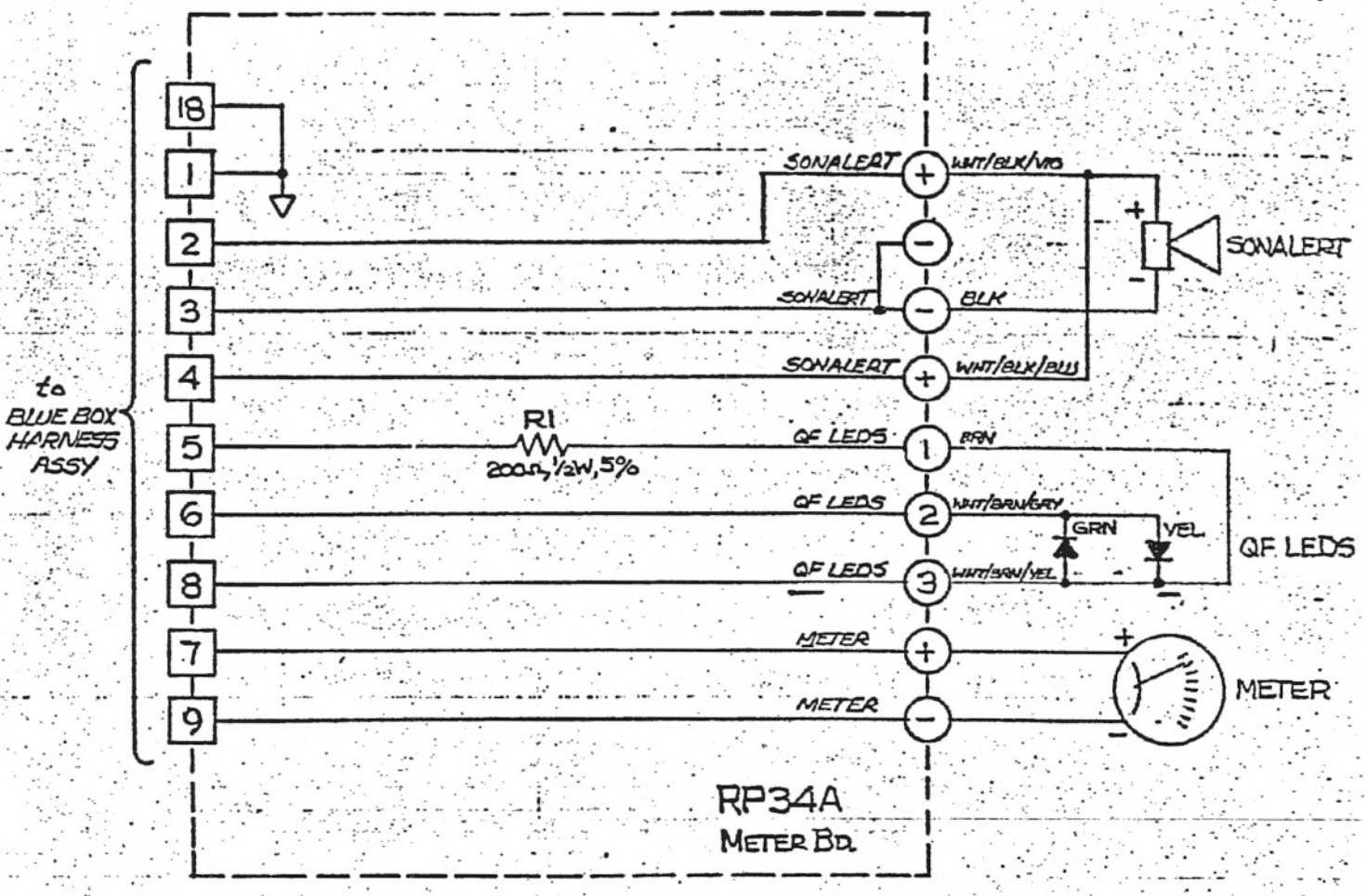

NOTE: SEE FRONT PANEL ASSY & FRONT PANEL ASSY PARTS LIST FOR PHYSICAL APPLICATION OF THIS SCHEMATIC

FIG I-14

APPENDIX - II

CALCULATIONS

1. **Integrator output** (IC2, RP285A):

$$V_{out} = \frac{I \times \Delta t}{C} \qquad (1)$$

where I = input current
Δt = integration time
C = capacitance

With this equation one can determine the charging current with a knowledge of the integration time; the output voltage is 22mV and the capacitance is 50pF.

The current that any source is generating in the ionization chamber can also be calculated knowing the output frequency. The current that the keep-alive source creates in the chamber and the strength of the source will be calculated below as a sample calculation.

2. **Conversion of Coulombs/st*/hr to Current:**

$$\frac{\text{Coulombs}}{\text{Secs}} = \text{Current(Amps)} \qquad (2)$$

$$\text{Current} \times 3600 = \text{Coulombs/st/hr} \qquad (3)$$

* st = Source strength in rem, mrem, urem, etc. and scale in conversions.

3. **Reconciling Chamber sensitivity: 1.1pC = 2.5urem = 1 pulse with output frequency of 0.111Hz for a source strength of 1mrem/hr:**

$$\begin{aligned} 2.5\text{urem} &= 1 \text{ pulse} \\ 1\text{mrem/hr} &= \frac{10^{-3}}{2.5 \times 10^{-6}} \text{pulses/hr} \\ &= 400 \text{ pulses/hr} \\ &= 0.111 \text{ Hz} \end{aligned} \qquad (4)$$

4. **Calculation of the Source Strength in urem and the current generated in the ionization chamber by the Keep-alive 3uC Ces 137 source:**

The Keep-alive source puts out one pulse (QF5) about every 15 secs so the integration time is 15 seconds. From equation 1 the charging current from the chamber is 70fA.

$$70\text{fA} \times 3600\ \text{Secs} = 252\text{pC}$$

If a 2.5urem/hr source creates 1.1pC, then 252pC is created by a source of strength 0.6mrem/hr, by simple proportion.

Therefore 3uC Ces137 source generates 70fA in the chamber and the source strength is 0.6mrem/hr.

ACKNOWLEDGEMENT

The authors are grateful to John Larsen of the Environment Safety and Health (ES&H) section of Fermi National Laboratory (FNAL) for explaining the subtleties of the Chipmunk circuits.

REFERENCES

1. Chipmunk reference manual.

2. John Larsen ES&H section, Fermi National Laboratory (FNAL).

3. Richard Lane, AGS Instrumentation Group, BNL.

4. Horowitz, P. and Hill, W. 1982 The Art of Electronics. New York: Cambridge University Press.