ITEM NO.	QTY.	DESCRIPTION	MAT'L. DWG. NO. OR BNL NO.
78	16	CLAMP, DOUBLE CLAW TYPE	LEYBOLD-HERAEUS P/N 26702
79	1	BANANA PLUG	H.H. SMITH P/N 188
80			

ITEM NO.	QTY.	DESCRIPTION	MAT'L. DWG. NO. OR BNL NO.
71	1	ø16 1/2 COPPER GASKET	MDC MODEL #GK-1650
72	32	BOLT SET 5/16-24 X 1 1/4 SST	MDC MODEL #BA-125
73	408	BOLT SET 5/16-24 X 1 3/4 SST	MDC MODEL #BA-600
74	36	BOLT SET 3/8-24 X 3 SST	MDC MODEL #B4-1650
75	2	SHOULDER SCREW SST	ALLIED DEVICES P/N 43037
76	12	BELLEVILLE WASHER 5/16 I.D. SST	ALLIED DEVICES P/N DD625
77	3	LEVELING PAD STL	VLIER P/N P306B

ITEM NO.	QTY.	DESCRIPTION	MAT'L. DWG. NO. OR BNL NO.
36	9	ø10 CONFLAT FLG. BLANK	I-05354
37	17	ø10 COPPER GASKET	I-05372
38	5	O-RING ø32 I.D. X 1/4W VITON	———
39	2	O-RING ø221/2 I.D. X 1/4W VITON	———
40	4	O-RING ø9 I.D. X 1/4W VITON	H-30689
41	4	O-RING ø8 I.D. X 1/4W VITON	H-30687
42			
43	48	SCR SOC HD 1/2-13 X 4 SST	———
44	8	SCR HEX HD 5/8-11 X 3 STL	T-12000
45	48	SCR SOC HD 1/2-13 X 21/2 SST	T-95801
46	16	SCR SOC HD 1/2-13 X 13/4 SST	T-95795
47	24	SCR SOC HD 3/8-16 X 11/4 SST	T-95753
48	24	SCR SOC HD 3/8-16 X 1" SST	T-95752
49	40	SCR SOC HD 5/16-18 X 1" SST	T-95717
50	16	SCR SOC HD 5/16-18 X 3/4 SST	T-95715
51	1	SCR FLT HD 5/16-18 X 21/2 SST	T-55996
52	1	SCR FLT HD 5/16-18 X 11/4 SST	———
53	3	SCR FLT HD 1/4-20 X 11/4 SST	T-55928
54	1	SCR RND HD 1/4-20 X 7/8 SST	T-58896
55	1	SETSCREW #10-32 X 1/2 SST	T-64139
56	24	SCR HEX HD 1/4-20 X 3/4 SST	T-12620
57			
58	8	NUT HEX 5/8-11 STL	T-79812
59	80	NUT HEX 1/2-13 SST	T-81616
60			
61	8	WASHER FLT 5/8 STL	T-83936
62	80	WASHER FLT 1/2 SST	T-84140
63	24	WASHER FLT 3/8 SST	T-84132
64	8	WASHER FLT 5/16 SST	T-84128
65	12	WASHER FLT 1/4 SST	T-84124
66	8	WASHER LOCK 5/8 STL	T-86356
67	80	WASHER LOCK 1/2 SST	T-86744
68	48	WASHER LOCK 3/8 SST	T-86736
69	40	WASHER LOCK 5/16 SST	T-86732
70	1	WASHER LOCK 1/4 SST	T-86728

ITEM NO.	QTY.	DESCRIPTION	MAT'L. DWG. NO. OR BNL NO.
1	1	TANK	D13-M-5768-5
2	1	CANISTER	D13-M-5769-5
3	2	END COVER	D13-M-5770-5
4	2	CONICAL CAP (MARK II)	D13-M-5771-5
5	1	DOUBLER TANK	D13-M-5772-5
6	2	LIFTING LUG (END COVER)	D13-M-5774-2
7	8	PEDESTAL	D13-M-5777-3
8	1	CATHODE ASSY. MOD II (ASSY -1)	D13-M-6055-5
9	1	CATHODE ASSY. MOD II (ASSY -2)	D13-M-6055-5
10	1	ANODE ASSY. MOD II (ASSY -1)	D13-M-6056-5
11	1	ANODE ASSY. MOD II (ASSY -2)	D13-M-6056-5
12	1	CATHODE FEEDER	D13-M-5954-3
13	2	FEEDTHRU SUB-ASSY.	D13-M-5834-4
14	9	PORT FAIRING ASSY.	D13-M-5896-4
15	1	SUPPORT ASSY.	D13-M-5902-5
16	2	GENERATOR ASSY.	D13-M-5921-4
17	1	POSITIONING TOOL ASSY.	D13-M-5925-5
18			
19			
20	8	LIFTING LUG (TANK)	D13-M-5773-3
21	8	ø10 FLANGE (MOD)	D13-M-5808-3
22	2	FEEDTHRU RETAINING RING	D13-M-5824-3
23	2	INSULATOR RETAINER	D13-M-5825-3
24	1	FEEDER SUPPORT	D13-M-5828-3
25	1	GUARD CAP MOD. II	D13-M-5955-3
26	1	CENTERING RING	D13-M-5830-3
27	1	CORONA RING RETAINER MOD.II	D13-M-5956-3
28	1	SPRING RETAINER BUTTON	D13-M-5845-1
29	1	FEEDTHRU CORONA RING (ALUM.)	D13-M-5890-4
30	1	FEEDTHRU CORONA RING (SST)	D13-M-5891-4
31	2	TANK SPACER	D13-M-6198-5
32	12	SPACER CLIP	D13-M-6234-2
33	1	SPRING COMPRESSION	ON HAND
34	4	ø4 1/2 CONFLAT FLG. BLANK	I-05342
35	4	ø4 1/2 COPPER GASKET	I-05366

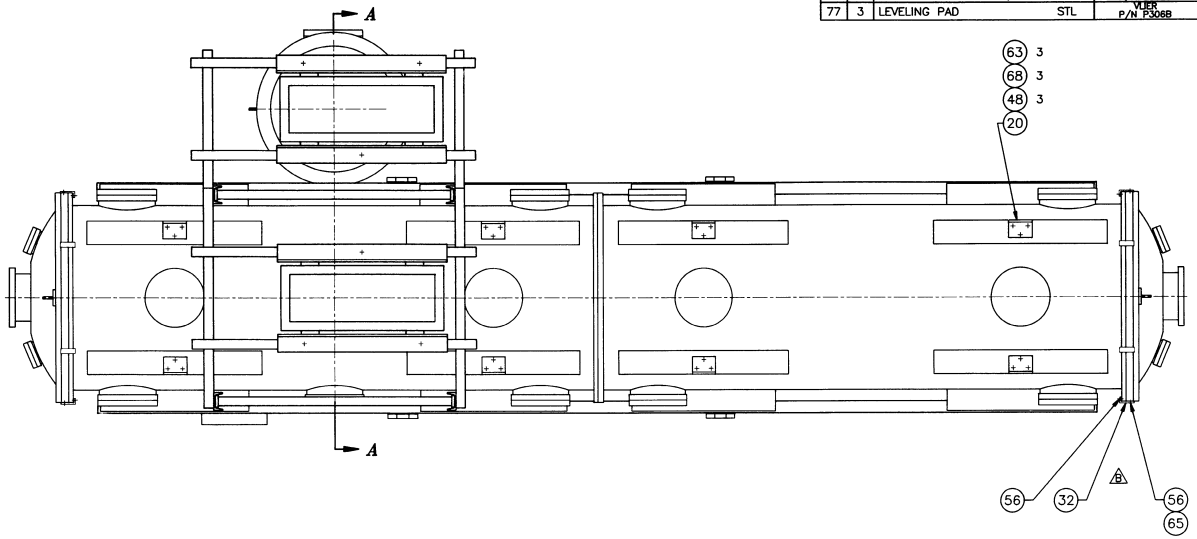

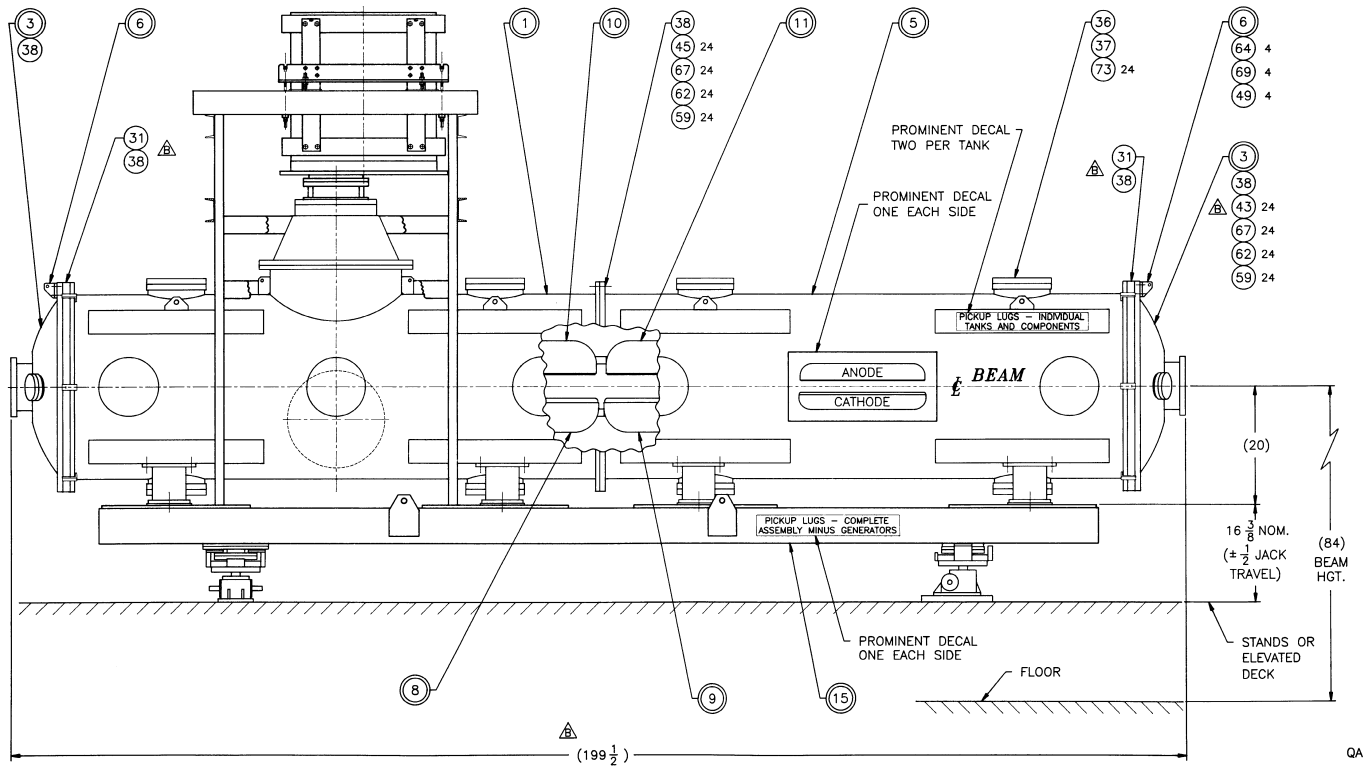

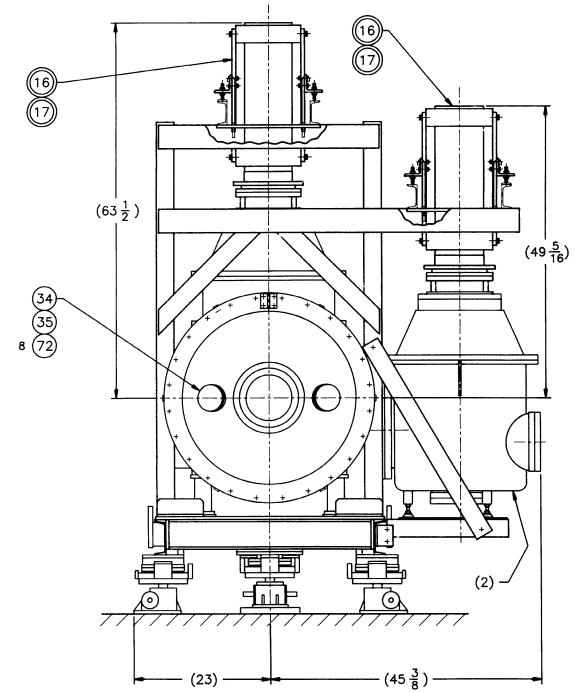

SEE SHT. 2 OF 2 FOR SECTIONS AND AUXILLARY VIEWS.

QA CATEGORY A-3

NOTES:
1- THIS SEPARATOR ASSY. IS THE OPPOSITE POLARITY OF SEPARATOR ASSY. D13-M-5767-5.

REV.	ZONE	DESCRIPTION	BY	DATE	CKR	APP
B		REVISED PER ECN #0251	JZ	1-11-91	J.W.	R.DAMM

NO. REQ.	ACCT. NO.	I.L.R. NO.	ORDER NO.	DEPT.	JOB NUMBER	USED ON DWG. NO.	NO. PER ASSY
					D13-1M-101	D16-M-2511-5	1

TOLERANCE: DEC.± ANG.± MAX. MIN. BREAK SHARP EDGES; 0-30" 30"-60" OVER 60"; FRACTIONAL TOLERANCE; FINISH

BROOKHAVEN NATIONAL LABORATORY
ASSOCIATED UNIVERSITIES, INC.
UPTON, N.Y. 11973

A.G.S. GENERAL EXPER. EQUIP.
2GeV/C BEAM
2 1/4 MTR. SEPARATOR ASSEMBLY

DATE	MATERIAL	SCALE	WEIGHT
1-19-90	SEE P/L	1/8	4 TONS

DRAWN BY	CHECKED BY	ENG. APP.	SUPVR. APP.
ZEBUDA	J.C.W.	J.W.	R.DAMM

DRAWING NUMBER: D13-M-6054-5 SHT. 1 OF 2 REV. B

1 *AUTOCAD

D13-M-6054-5 SHT. 1 OF 2