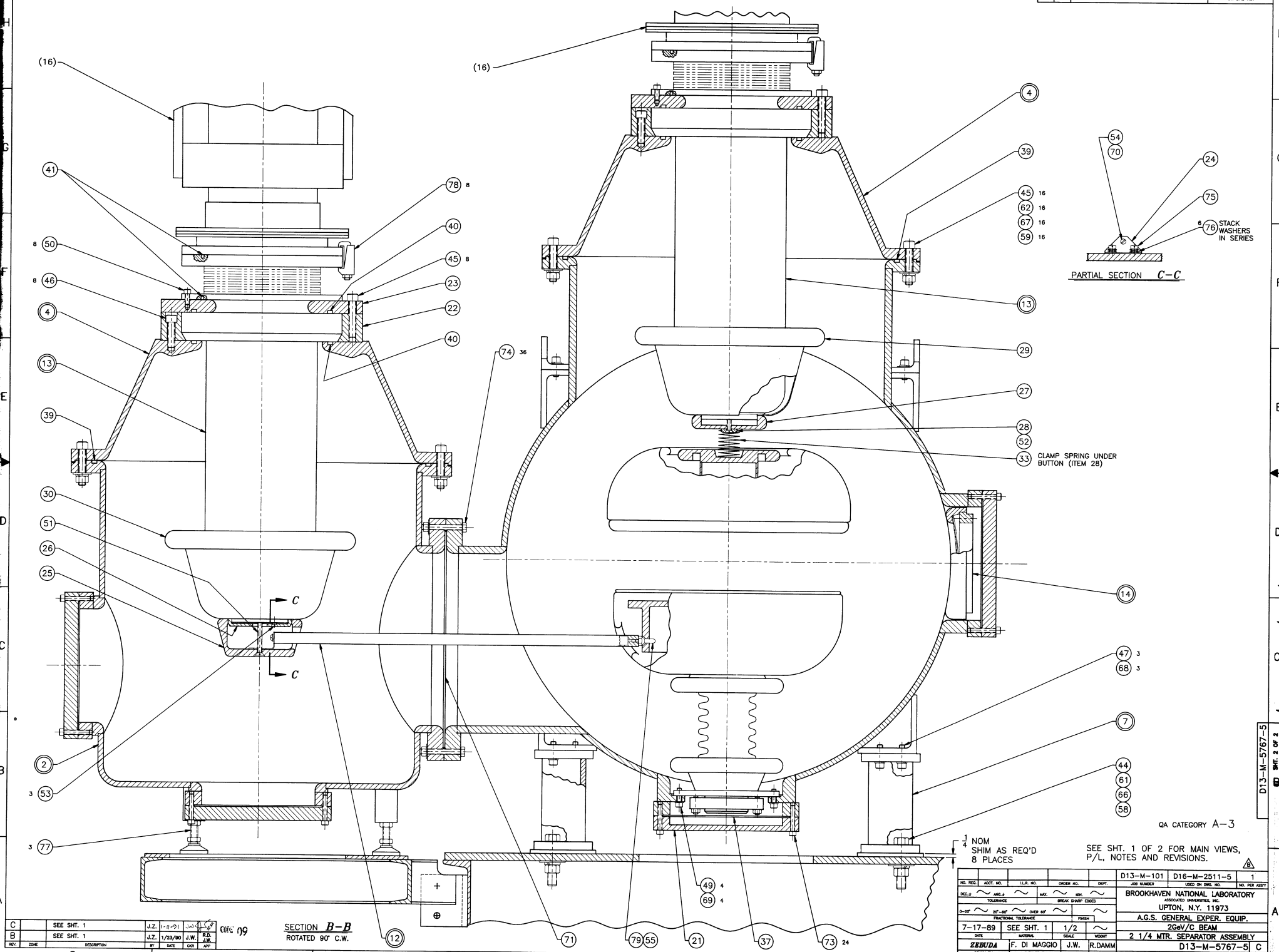
(16)
(16)
41
78 8
40
45 8
23
22
40
8 50
8 46
4
13
39
74 36
30
51
26
25
C
C
2
3 53
3 77
4
39
45 16
62 16
67 16
59 16
13
29
27
28
52
33 CLAMP SPRING UNDER BUTTON (ITEM 28)
14
47 3
68 3
7
44
61
66
58
54
70
24
75
6 76 STACK WASHERS IN SERIES
PARTIAL SECTION C–C
1/4 NOM SHIM AS REQ'D 8 PLACES
49 4
69 4
12
71
79 55
21
37
73 24
SECTION B–B
ROTATED 90° C.W.
QA CATEGORY A–3
SEE SHT. 1 OF 2 FOR MAIN VIEWS, P/L, NOTES AND REVISIONS.
D13–M–5767–5
SHT. 2 OF 2
C SEE SHT. 1 J.Z. 1-11-91
B SEE SHT. 1 J.Z. 1/23/90 J.W. R.D.
REV. ZONE DESCRIPTION BY DATE CKR APP
COPE 09
ITEM NO. QTY. DESCRIPTION MAT'L. DWG. NO. OR BNL NO.
D13–M–101 D16–M–2511–5 1
JOB NUMBER USED ON DWG. NO. NO. PER ASSY
BROOKHAVEN NATIONAL LABORATORY
ASSOCIATED UNIVERSITIES, INC.
UPTON, N.Y. 11973
A.G.S. GENERAL EXPER. EQUIP.
2GeV/C BEAM
2 1/4 MTR. SEPARATOR ASSEMBLY
D13–M–5767–5 C
DRAWING NUMBER SHT. 2 OF 2 REV.
7–17–89 SEE SHT. 1 1/2
DATE MATERIAL SCALE WEIGHT
ZEBUDA F. DI MAGGIO J.W. R.DAMM
DRAWN BY CHECKED BY ENG. APP. SUPVR. APP.
1 *AUTOCAD