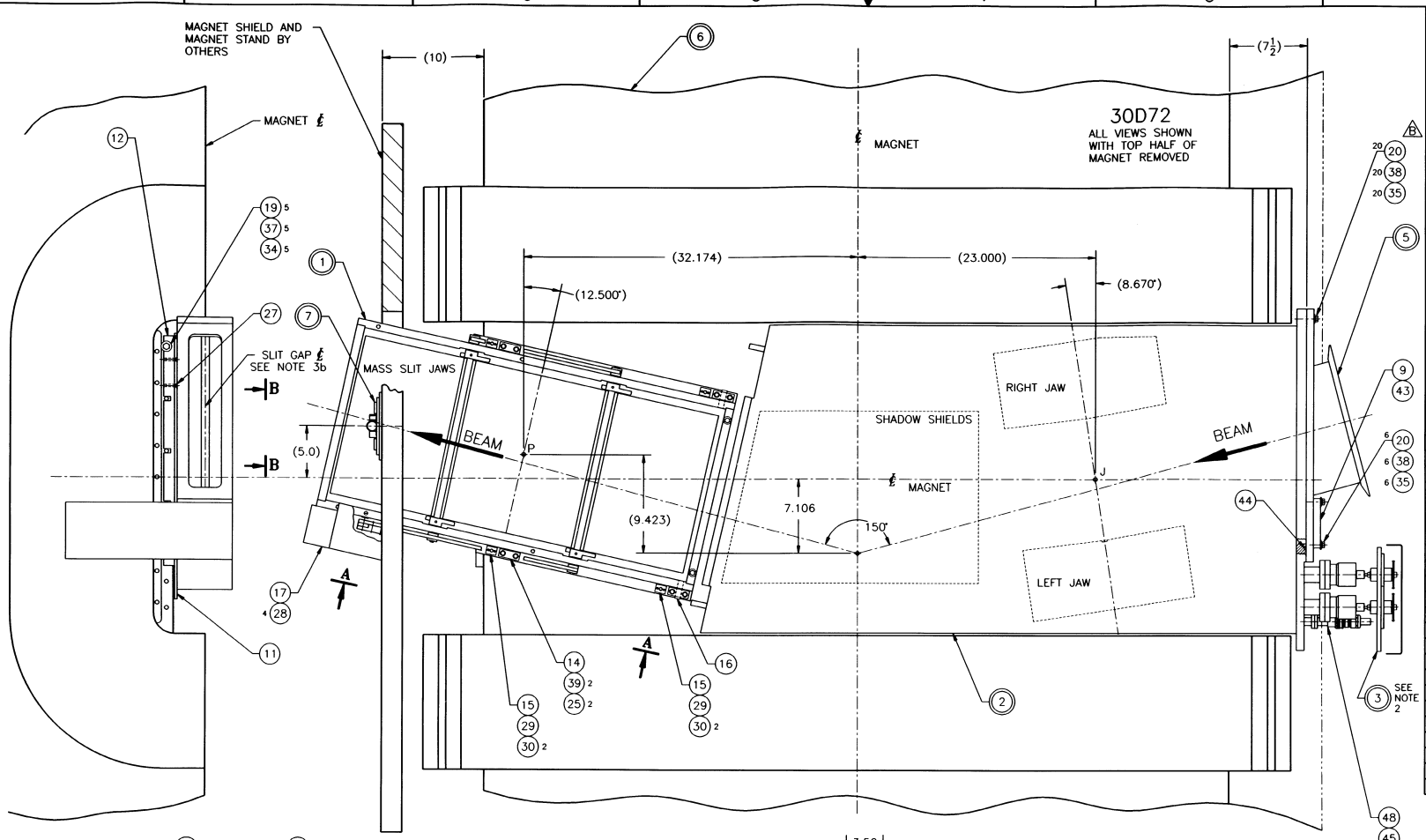

ITEM NO.	QTY.	DESCRIPTION	MAT'L. DWG. NO. OR BNL NO.
1	1	FIRST MASS SLIT ASSEMBLY	D13-M-6227-5
2	1	FIRST VARIABLE COLLIMATOR ASSY.	D13-M-6024-5
3	1	FIRST VARIABLE COLL. DRIVE ASSY.	D13-M-6025-5
4	1	MASS SLIT DRIVE ASSEMBLY	D13-M-6157-5
5	1	VACUUM BOX FLANGE	D13-M-6027-5
6	1	30D72 MAGNET ASSEMBLY	D12-M-224-6
7	1	LINEAR POTENTIOMETER ASSEMBLY	D13-M-6490-4
8			
9	1	FLANGE BLANK-OFF	D13-M-6151-3
10	1	DRIVE LINK SUPPORT	D13-M-6164-2
11	1	SUPPORT PLATE	D13-M-6171-4
12	1	PLATE SUPPORT	D13-M-6172-3
13	2	BLOCK LONG	D13-M-6173-2
14	2	BLOCK SHORT	D13-M-6174-2
15	4	LOCK PLATE	D13-M-6175-2
16	2	PIN	D13-M-6176-2
17	1	DRIVE ENCLOSURE	D13-M-6165-5
18			
19	5	SCR HEX HD 3/8-16 x 1 1/2 SST	T-12816
20	26	SCR HEX HD 5/16-18 x 1 1/4 SST	T-12724
21	9	SCR HEX HD 5/16-18 x 1" SST	T-12716
22	2	SCR HEX HD 1/4-20 x 1/2 SST	T-12612
23			
24	4	SCR SOC HD 1/4-20 x 1 1/2 SST	T-95692
25	6	SCR SOC HD 1/4-20 x 3/4 SST	T-95686
26			
27	8	SCR FLT HD 1/4-20 x 7/8 SST	T-55920
28	4	SCR RND HD #10-32 x 3/8 SST	T-58740
29	4	SETSCREW 5/16-18 x 1" SST	--------
30	8	SETSCREW #10-32 x 1/2 SST	T-64139
31	2	SETSCREW #8-32 x 5/16 SST	T-64097
32			
33			
34	5	WASHER FLT ø3/8 SST	T-84132
35	35	WASHER FLT ø5/16 SST	T-84128
36	AS REQD	WASHER FLT ø1/4 SST	T-84124
37	5	WASHER LOCK ø3/8 SST	T-86736
38	35	WASHER LOCK ø5/16 SST	T-86732
39	10	WASHER LOCK ø1/4 SST	T-86728
40			
41			
42			
43	1	O-RING ø1/8 x 3 1/4 I.D. VITON	H-30547
44	1	O-RING ø1/4	VITON ROPE
45	1	COPPER GASKET ø1 1/3 CONFLAT	I-05360
46	1pk	BOLTS ø1 1/3 CONFLAT	I-05380
47			
48	1	ELECTRICAL FEEDTHROUGH	MDC P/N 647000
49	1	DOWEL PIN ø5/16 x 1 1/4 SST	ALLIED DEVICES P/N D1201250

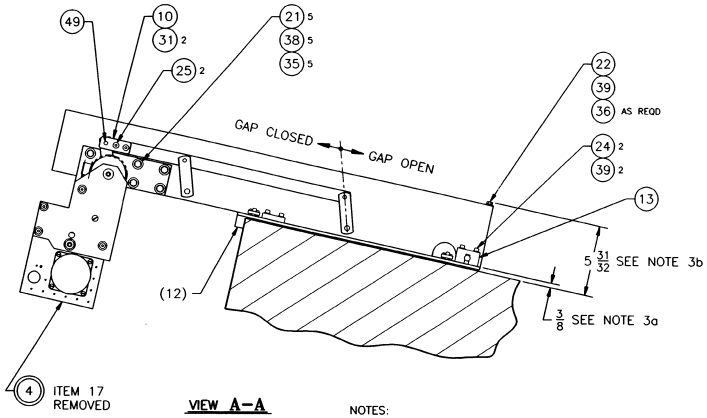

VIEW A-A

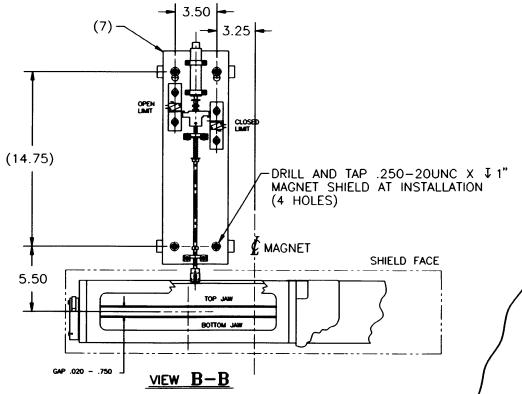

VIEW B-B

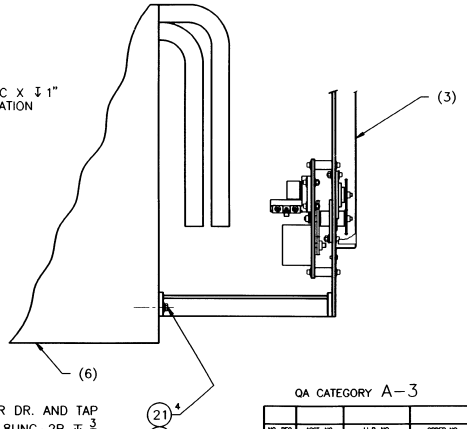

TRANSFER DR. AND TAP
4X 5/16 -18UNC-2B ↧ 3/4
IN MAGNET CORE
(2 PLACES IN BOTTOM CORE)
(2 PLACES IN TOP CORE)

NOTES:

1- LOCATIONS P AND J ARE COMPONENT CENTER POSITIONS. THESE DESIGN POINTS ARE INCLUDED FOR INFORMATIONAL REFERENCE ONLY, AND ARE AUTOMATICALLY ATTAINED BY MECHANICAL CONSTRAINTS. EXCEPT FOR THE MASS SLIT HEIGHT ADJUSTMENT, NO POSITIONAL SURVEYING IS REQUIRED.

2- ADJUSTMENT OF THE FIRST VARIABLE COLLIMATOR ASS'Y (ITEM 2) AND ITS DRIVE (ITEM 3) IS FULLY DESCRIBED ON DRAWING D13-M-6025-5.

3- POSITIONING AND ADJUSTMENT OF THE MASS SLIT (ITEM 1) AND ITS DRIVE (ITEM 4) IS AS FOLLOWS:
   a. INSTALL SUPPORT PLATE (ITEM 11) AND ITS COMPONENTS.
      ADJUST ITS UPPER SURFACE INTO A PLANE APPROX. 3/8 INCH ABOVE THE MAGNET CORE FACE.
   b. CRADLE THE MASS SLIT ASS'Y (ITEM 1) INTO THE ABOVE, AND ADJUST THE SLIT GAP CENTERLINE ONTO THE MAGNET CENTERLINE PLANE BY MEANS OF JACK SCREWS (ITEM 29) AND LOCKING HARDWARE. SET ANTI-TIPPING SCREWS (ITEM 22) TO 5 31/32 INCH DIMENSION NOTED.
   c. INSTALL THE MASS SLIT DRIVE ASS'Y (ITEM 4) AND CONNECT IT TO THE MASS SLIT LINKAGE.
   d. ADJUST THE JAW GAP AND THE SWITCHES OF ITEM 7 TO .020 CLOSED LIMIT, .750 OPEN LIMIT.
   e. RECORD THE POTENTIOMETER READING OF ITEM 7 AT BOTH LIMITS.
   f. RUN AND TEST. COMPLETE ASSEMBLY.

REV.	ZONE	DESCRIPTION	BY	DATE	CHK	APP
B		REVISED PER ECN NO 0404	KMB	10-10-91		

Code 09

QA CATEGORY A-3

NO. REQ.	ACCT. NO.	LL.R. NO.	ORDER NO.	DEPT.	JOB NUMBER	USED ON DWG. NO.	NO. PER ASSY
					D13-2M-93	D16-M-2511-5	1

TOLERANCE: DEC. ± .005 ANG. ± 1/2° MAX. 1/32 MIN. 1/64 — BREAK SHARP EDGES
FRACTIONAL TOLERANCE: 0-20" ± 1/64 20"-60" ± 1/32 OVER 60" ± 1/16 — FINISH 125 √

DATE	MATERIAL	SCALE	WEIGHT
1-10-91	SEE P/L	1/4	

DRAWN BY	CHECKED BY	ENG. APP.	SUPVR. APP.
J.W.	J.W.	R.DAMM	

BROOKHAVEN NATIONAL LABORATORY
ASSOCIATED UNIVERSITIES, INC.
UPTON, N.Y. 11973

A.G.S. GENERAL EXPER. EQUIP.
2 GeV/c BEAM ASSEMBLY
30D72,COLLIMATOR, MASS SLIT, INSTALLATION

DRAWING NUMBER: D12-M-5675-5 REV. B

D12-M-5675-5

1 *AUTOCAD