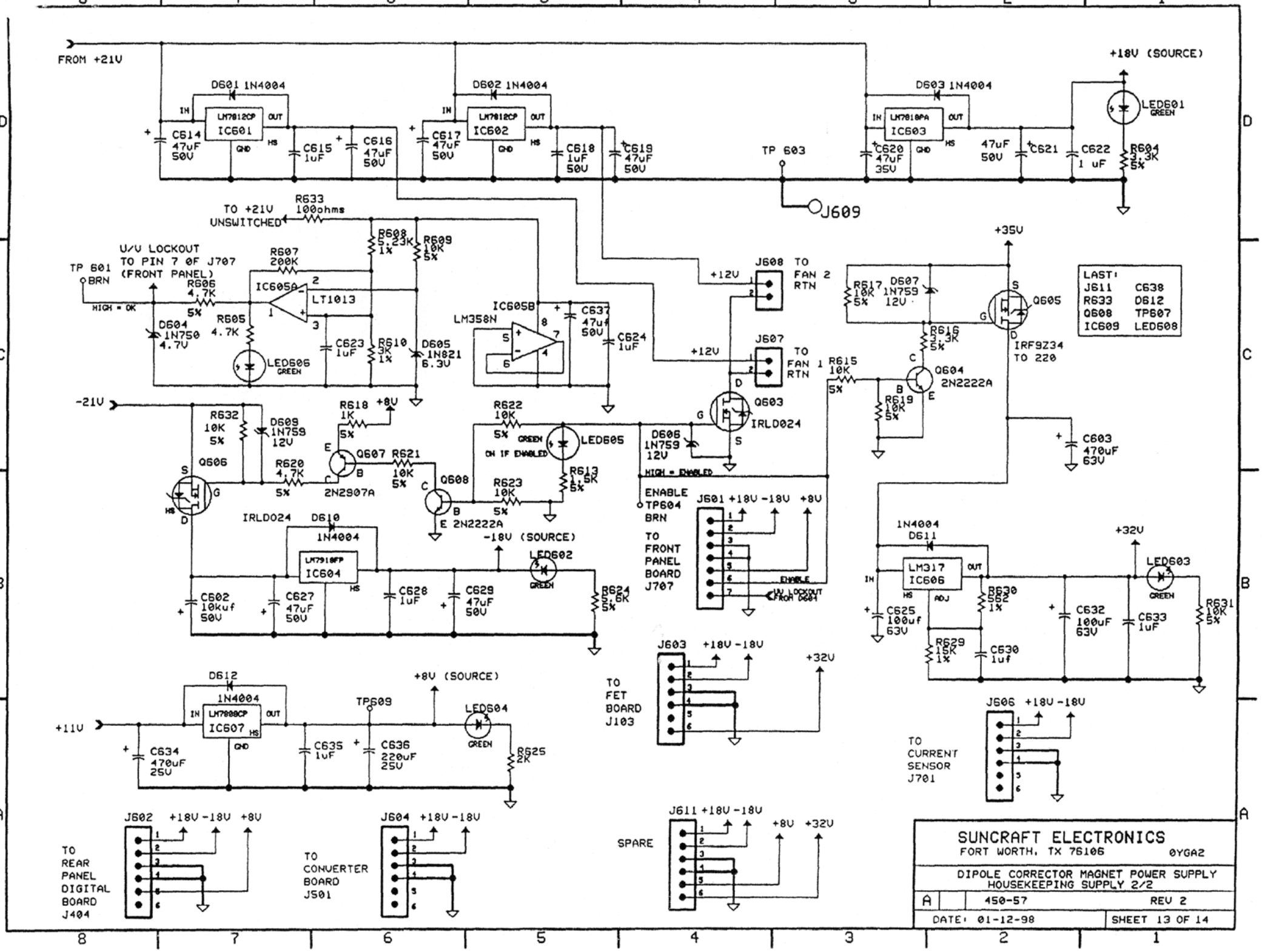
FROM +21V
D601 1N4004
IC601 LM7812CP
C614 47uF 50V
C615 1uF
C616 47uF 50V
D602 1N4004
IC602 LM7812CP
C617 47uF 50V
C618 1uF 50V
C619 47uF 50V
D603 1N4004
IC603 LM7818PA
C620 47uF 35V
47uF 50V
C621
C622 1 uF
R604 3.3K 5%
LED601 GREEN
+18V (SOURCE)
TP 603
J609
TO +21V UNSWITCHED
R633 100ohms
U/V LOCKOUT TO PIN 7 OF J707 (FRONT PANEL)
TP 601 BRN
HIGH = OK
R606 4.7K 5%
R605 4.7K
D604 1N750 4.7V
LED606 GREEN
R607 200K
IC605A LT1013
R608 5.23K 1%
R609 10K 5%
C623 1uF
R610 3K 1%
D605 1N821 6.3V
IC605B LM358N
C637 47uf 50V
C624 1uF
J608 TO FAN 2 RTN
J607 TO FAN 1 RTN
+12V
Q603 IRLD024
D606 1N759 12V
HIGH = ENABLED
ENABLE TP604 BRN
TO FRONT PANEL BOARD J707
J601 +18V -18V +8V
ENABLE
UV LOCKOUT FROM D601
R617 10K 5%
D607 1N759 12V
R616 3.3K 5%
Q605 IRF9Z34 TO 220
Q604 2N2222A
R615 10K 5%
R619 10K 5%
+35V
C603 470uF 63V
LAST:
J611 C638
R633 D612
Q608 TP607
IC609 LED608
-21V
R632 10K 5%
D609 1N759 12V
Q606
R618 1K 5%
+8V
Q607 2N2907A
R620 4.7K 5%
R621 10K 5%
Q608 2N2222A
R622 10K 5%
LED605 GREEN ON IF ENABLED
R613 1.5K 5%
R623 10K 5%
IRLD024
D610 1N4004
IC604 LM7918FP
-18V (SOURCE)
LED602 GREEN
C602 10kuf 50V
C627 47uF 50V
C628 1uF
C629 47uF 50V
R624 5.6K 5%
1N4004 D611
IC606 LM317
+32V
LED603 GREEN
C625 100uf 63V
R630 562 1%
R629 15K 1%
C630 1uf
C632 100uF 63V
C633 1uF
R631 10K 5%
J603 +18V -18V +32V
TO FET BOARD J103
J606 +18V -18V
TO CURRENT SENSOR J701
D612 1N4004
IC607 LM7808CP
+11V
C634 470uF 25V
C635 1uF
TP609
C636 220uF 25V
+8V (SOURCE)
LED604 GREEN
R625 2K
J602 +18V -18V +8V
TO REAR PANEL DIGITAL BOARD J404
J604 +18V -18V
TO CONVERTER BOARD JS01
J611 +18V -18V +8V +32V
SPARE
SUNCRAFT ELECTRONICS
FORT WORTH, TX 76106
0YGA2
DIPOLE CORRECTOR MAGNET POWER SUPPLY
HOUSEKEEPING SUPPLY 2/2
A
450-57
REV 2
DATE: 01-12-98
SHEET 13 OF 14