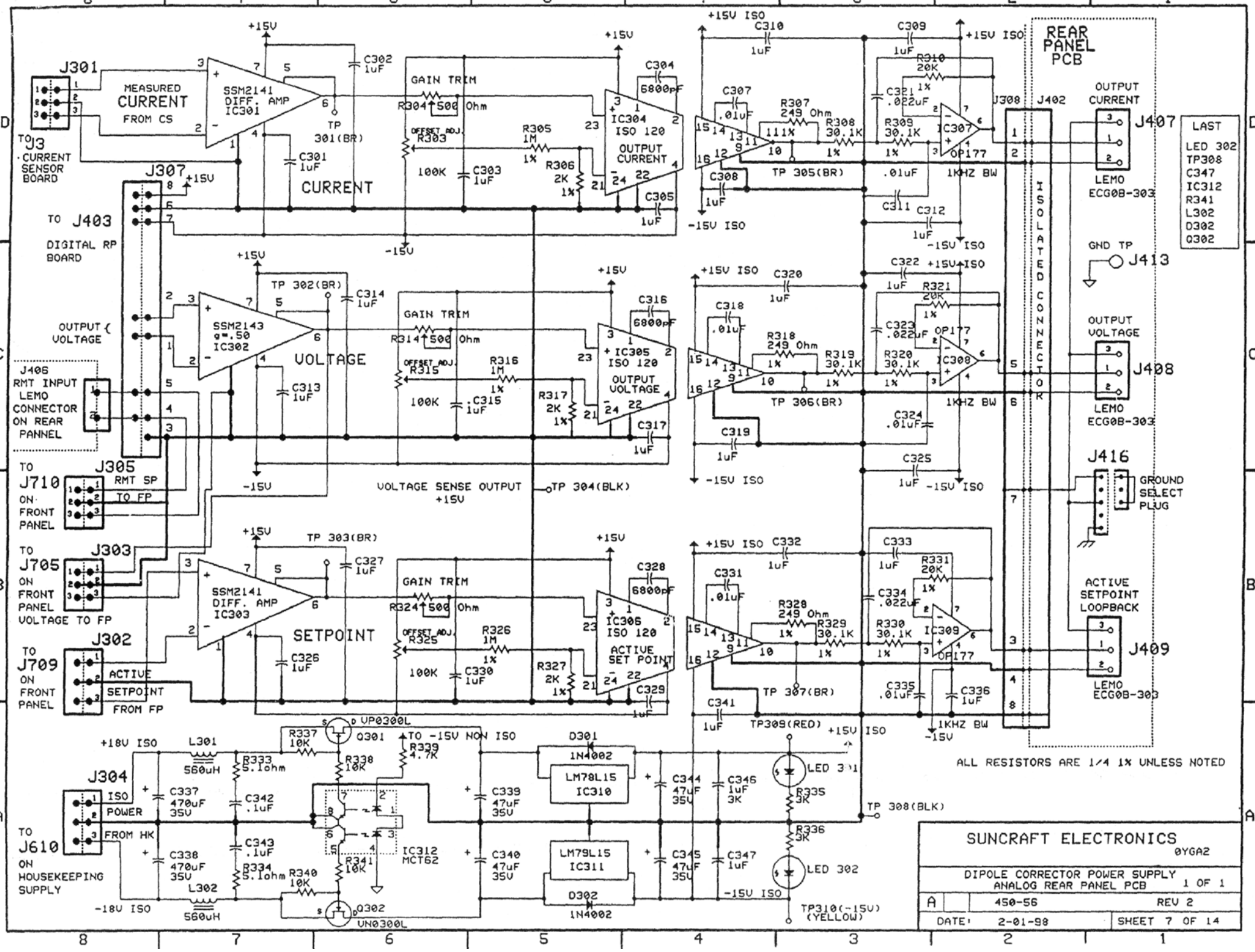
J301
MEASURED CURRENT FROM CS
SSM2141 DIFF. AMP IC301
TO J3 CURRENT SENSOR BOARD
J307
TO J403 DIGITAL RP BOARD
CURRENT
GAIN TRIM
R304 500 Ohm
OFFSET ADJ. R303
100K
IC304 ISO 120
OUTPUT CURRENT
IC307 OP177
1KHZ BW
TP 305(BR)
REAR PANEL PCB
ISOLATED CONNECTOR
J402
J407
OUTPUT CURRENT
LEMO ECG0B-303
LAST
LED 302
TP308
C347
IC312
R341
L302
D302
Q302
GND TP
J413
OUTPUT VOLTAGE
J408
J406 RMT INPUT LEMO CONNECTOR ON REAR PANNEL
VOLTAGE
SSM2143 g=.50 IC302
TP 302(BR)
IC305 ISO 120
IC308 OP177
TP 306(BR)
J416
GROUND SELECT PLUG
J305
RMT SP
TO FP
TO J710 ON FRONT PANEL
VOLTAGE SENSE OUTPUT +15V
TP 304(BLK)
J303
TO J705 ON FRONT PANEL VOLTAGE TO FP
SSM2141 DIFF. AMP IC303
TP 303(BR)
SETPOINT
IC306 ISO 120
ACTIVE SET POINT
IC309 OP177
TP 307(BR)
ACTIVE SETPOINT LOOPBACK
J409
LEMO ECG0B-303
J302
TO J709 ON FRONT PANEL
ACTIVE
SETPOINT
FROM FP
Q301 VP0300L
Q302 VN0300L
TO -15V NON ISO
IC312 MCT62
D301 1N4002
D302 1N4002
LM78L15 IC310
LM79L15 IC311
LED 301
LED 302
TP 308(BLK)
TP309(RED)
TP310(-15V) (YELLOW)
J304
TO J610 ON HOUSEKEEPING SUPPLY
ISO POWER FROM HK
L301 560uH
L302 560uH
+18V ISO
-18V ISO
ALL RESISTORS ARE 1/4 1% UNLESS NOTED
SUNCRAFT ELECTRONICS
0YGA2
DIPOLE CORRECTOR POWER SUPPLY
ANALOG REAR PANEL PCB
1 OF 1
A
450-56
REV 2
DATE: 2-01-98
SHEET 7 OF 14