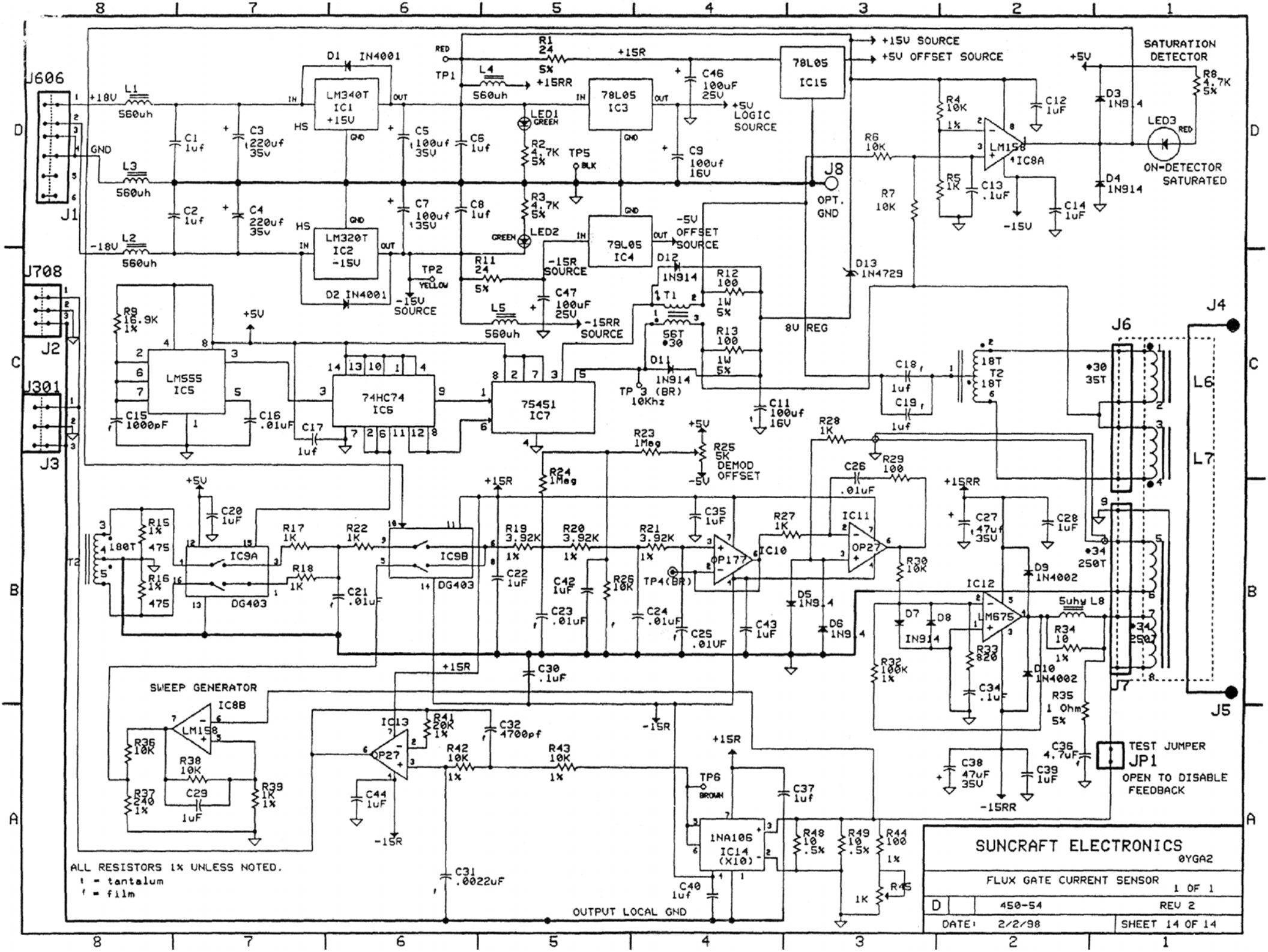

J606
J1
J708
J2
J301
J3
+18V
-18V
GND
L1 560uh
L2 560uh
L3 560uh
C1 1uf
C2 1uf
C3 220uf 35v
C4 220uf 35v
D1 IN4001
D2 IN4001
LM340T IC1 +15V
LM320T IC2 -15V
C5 100uf 35V
C7 100uf 35V
C6 1uf
C8 1uf
TP1
TP2 YELLOW
-15V SOURCE
RED
L4 560uh
+15RR
R1 24 5%
+15R
78L05 IC3
78L05 IC15
C46 100uf 25V
+5V LOGIC SOURCE
C9 100uf 16V
LED1 GREEN
R2 4.7K 5%
TP5 BLK
R3 4.7K 5%
LED2 GREEN
79L05 IC4
-5V OFFSET SOURCE
R11 24 5%
-15R SOURCE
C47 100uF 25V
L5 560uh
-15RR SOURCE
D12 1N914
T1 56T
D11 1N914
TP 3 (BR) 10Khz
R12 100 1W 5%
R13 100 1W 5%
C11 100uf 16V
8V REG
D13 1N4729
J8 OPT. GND
R6 10K
R7 10K
R4 10K 1%
R5 1K
C13 .1uF
LM158 IC8A
C12 1uF
C14 1uF
-15V
+15V SOURCE
+5V OFFSET SOURCE
+5V
SATURATION DETECTOR
R8 4.7K 5%
D3 1N914
D4 1N914
LED3 RED
ON-DETECTOR SATURATED
R9 16.9K 1%
LM555 IC5
C15 1000pF
C16 .01uF
C17 1uf
74HC74 IC6
75451 IC7
C18 1uf
C19 1uf
18T T2 18T
J6
J4
L6
L7
*30 35T
*34 250T
J7
J5
R23 1Meg
R25 5K DEMOD OFFSET
R24 1Meg
R28 1K
R29 100
C26 .01uF
+15RR
C27 47uf 35V
C28 1uF
C20 1uF
R15 1% 475
R16 1% 475
180T
T2
IC9A DG403
IC9B DG403
R17 1K
R18 1K
R22 1K
C21 .01uF
R19 3.92K 1%
R20 3.92K 1%
R21 3.92K 1%
C22 1uF
C35 1uF
C42 1uF
R26 10K
C23 .01uF
C24 .01uF
C25 .01UF
TP4(BR)
OP177 IC10
R27 1K
IC11 OP27
R30 10K
D5 1N914
D6 1N914
C43 1uF
D9 1N4002
IC12 LM675
D7 IN914
D8
R33 820
C34 .1uF
D10 1N4002
R32 100K 1%
5uhy L8
R34 10 1%
R35 1 Ohm 5%
C36 4.7uF
C38 47uF 35V
C39 1uF
-15RR
TEST JUMPER JP1
OPEN TO DISABLE FEEDBACK
SWEEP GENERATOR
IC8B LM158
R36 10K
R37 240 1%
R38 10K
C29 1uF
R39 1K 1%
IC13 OP27
R41 20K 1%
C32 4700pf
R42 10K 1%
R43 10K 1%
C44 1uF
-15R
C30 .1uF
C31 .0022uF
TP6 BROWN
C37 1uf
1NA106 IC14 (X10)
C40 1uf
R48 10 .5%
R49 10 .5%
R44 100 1%
R45 1K
OUTPUT LOCAL GND
ALL RESISTORS 1% UNLESS NOTED.
t = tantalum
f = film
SUNCRAFT ELECTRONICS
0YGA2
FLUX GATE CURRENT SENSOR
1 OF 1
D
450-54
REV 2
DATE: 2/2/98
SHEET 14 OF 14