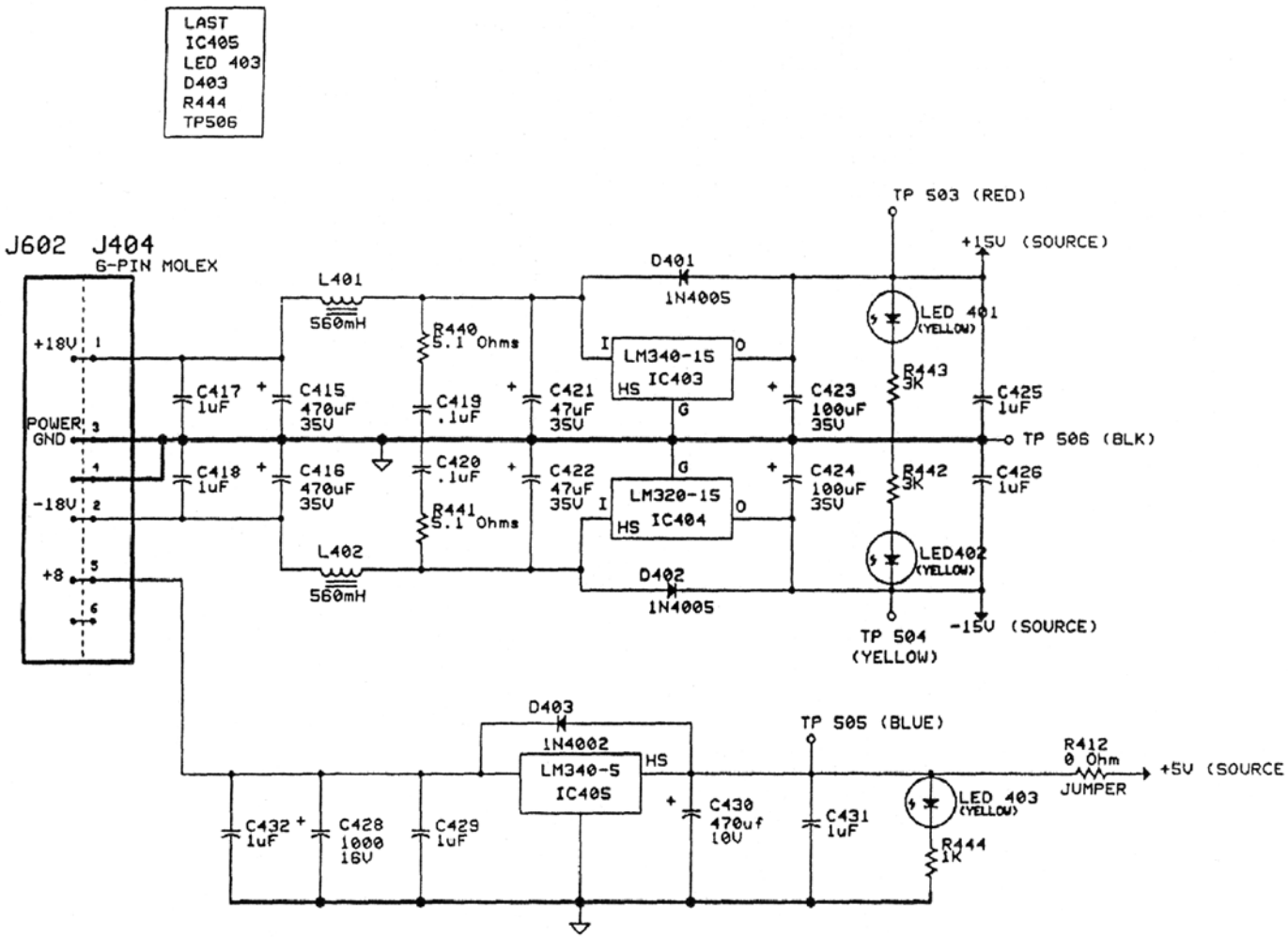

SUNCRAFT ELECTRONICS
FT. WORTH, TX 76106 0YGA2

DIPOLE MAGNET CORRECTOR P.S.
REAR PANEL DIGITAL BOARD PAGE 2/2

A	450-53	REV
DATE: 2/01/98		SHEET 9 OF 14