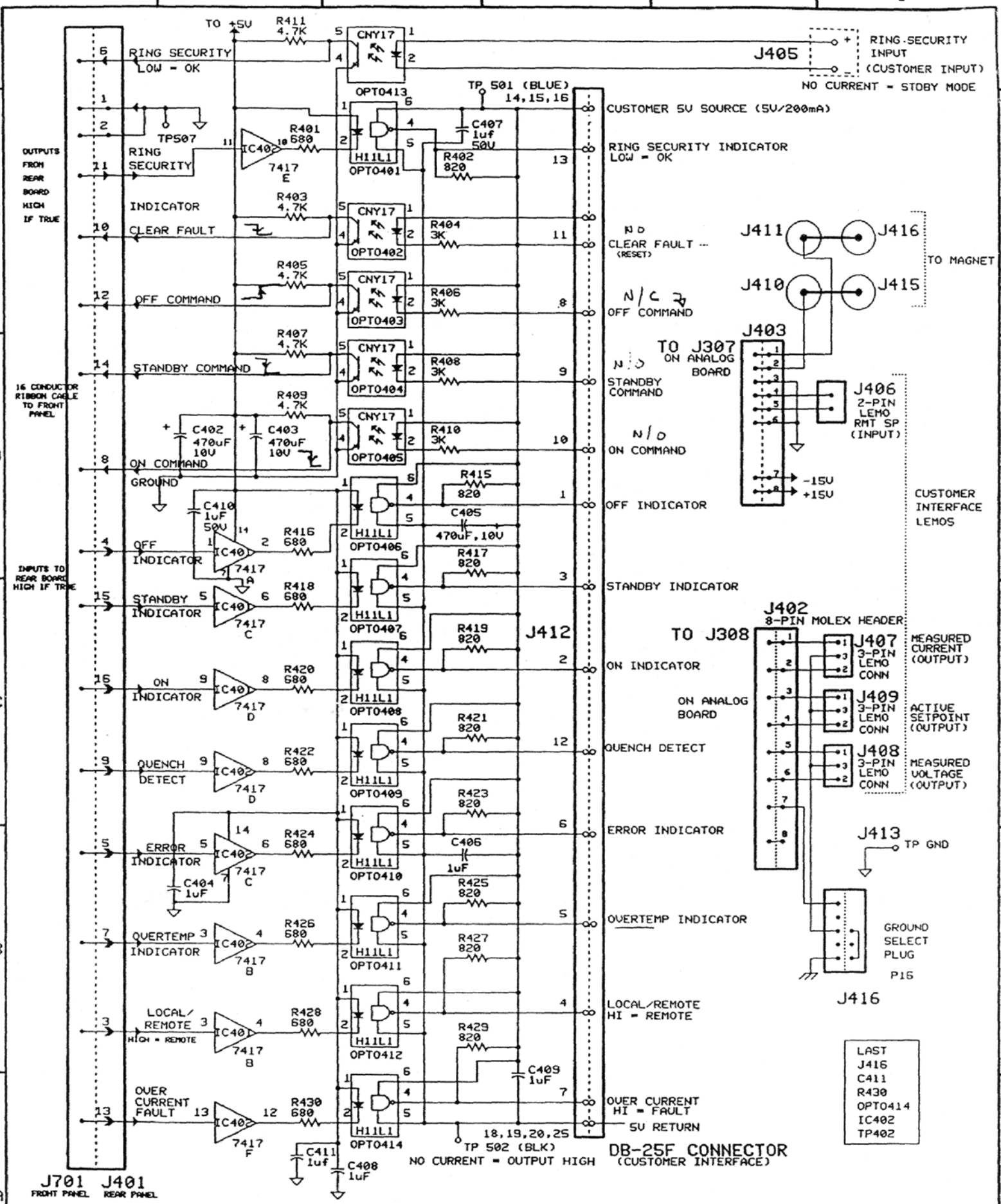
TO +5V
R411 4.7K
CNY17
J405
RING SECURITY INPUT (CUSTOMER INPUT)
NO CURRENT = STDBY MODE
RING SECURITY LOW = OK
OPTO413
TP 501 (BLUE) 14,15,16
CUSTOMER 5V SOURCE (5V/200mA)
TP507
R401 680
C407 1uf 50V
RING SECURITY INDICATOR LOW = OK
OUTPUTS FROM REAR BOARD HIGH IF TRUE
RING SECURITY
IC40 7417 E
H11L1
OPTO401
R402 820
INDICATOR
R403 4.7K
CLEAR FAULT
R404 3K
OPTO402
N.O
CLEAR FAULT (RESET)
J411
J416
TO MAGNET
J410
J415
R405 4.7K
OFF COMMAND
R406 3K
OPTO403
N/C
OFF COMMAND
J403
TO J307 ON ANALOG BOARD
R407 4.7K
STANDBY COMMAND
R408 3K
OPTO404
N.O
STANDBY COMMAND
J406 2-PIN LEMO RMT SP (INPUT)
16 CONDUCTOR RIBBON CABLE TO FRONT PANEL
R409 4.7K
C402 470uF 10V
C403 470uF 10V
R410 3K
OPTO405
N/O
ON COMMAND
ON COMMAND
GROUND
-15V
+15V
R415 820
OFF INDICATOR
C410 1uF 50V
C405 470uF,10V
OFF INDICATOR
R416 680
OPTO406
CUSTOMER INTERFACE LEMOS
INPUTS TO REAR BOARD HIGH IF TRUE
R417 820
STANDBY INDICATOR
STANDBY INDICATOR
R418 680
OPTO407
J402 8-PIN MOLEX HEADER
TO J308
R419 820
J412
J407 3-PIN LEMO CONN
MEASURED CURRENT (OUTPUT)
ON INDICATOR
R420 680
OPTO408
ON INDICATOR
ON ANALOG BOARD
J409 3-PIN LEMO CONN
ACTIVE SETPOINT (OUTPUT)
R421 820
QUENCH DETECT
R422 680
OPTO409
QUENCH DETECT
J408 3-PIN LEMO CONN
MEASURED VOLTAGE (OUTPUT)
R423 820
ERROR INDICATOR
R424 680
C406 1uF
OPTO410
ERROR INDICATOR
C404 1uF
J413
TP GND
R425 820
OVERTEMP INDICATOR
R426 680
OPTO411
OVERTEMP INDICATOR
R427 820
GROUND SELECT PLUG
P16
J416
LOCAL/REMOTE HI = REMOTE
R428 680
R429 820
OPTO412
LOCAL/ REMOTE
HIGH = REMOTE
C409 1uF
OVER CURRENT FAULT
R430 680
OVER CURRENT HI = FAULT
OPTO414
5V RETURN
18,19,20,25
TP 502 (BLK)
NO CURRENT = OUTPUT HIGH
DB-25F CONNECTOR (CUSTOMER INTERFACE)
C411 1uf
C408 1uF
J701 FRONT PANEL
J401 REAR PANEL
LAST
J416
C411
R430
OPTO414
IC402
TP402
SUNCRAFT ELECTRONICS
FT. WORTH, TX 76106
0YGA2
DIPOLE MAGNET CORRECTOR PS
REAR PANEL DIGITAL BOARD PG.1 OF 2
A
450-53
REV NC
DATE: 2/01/98
SHEET 8 OF 14