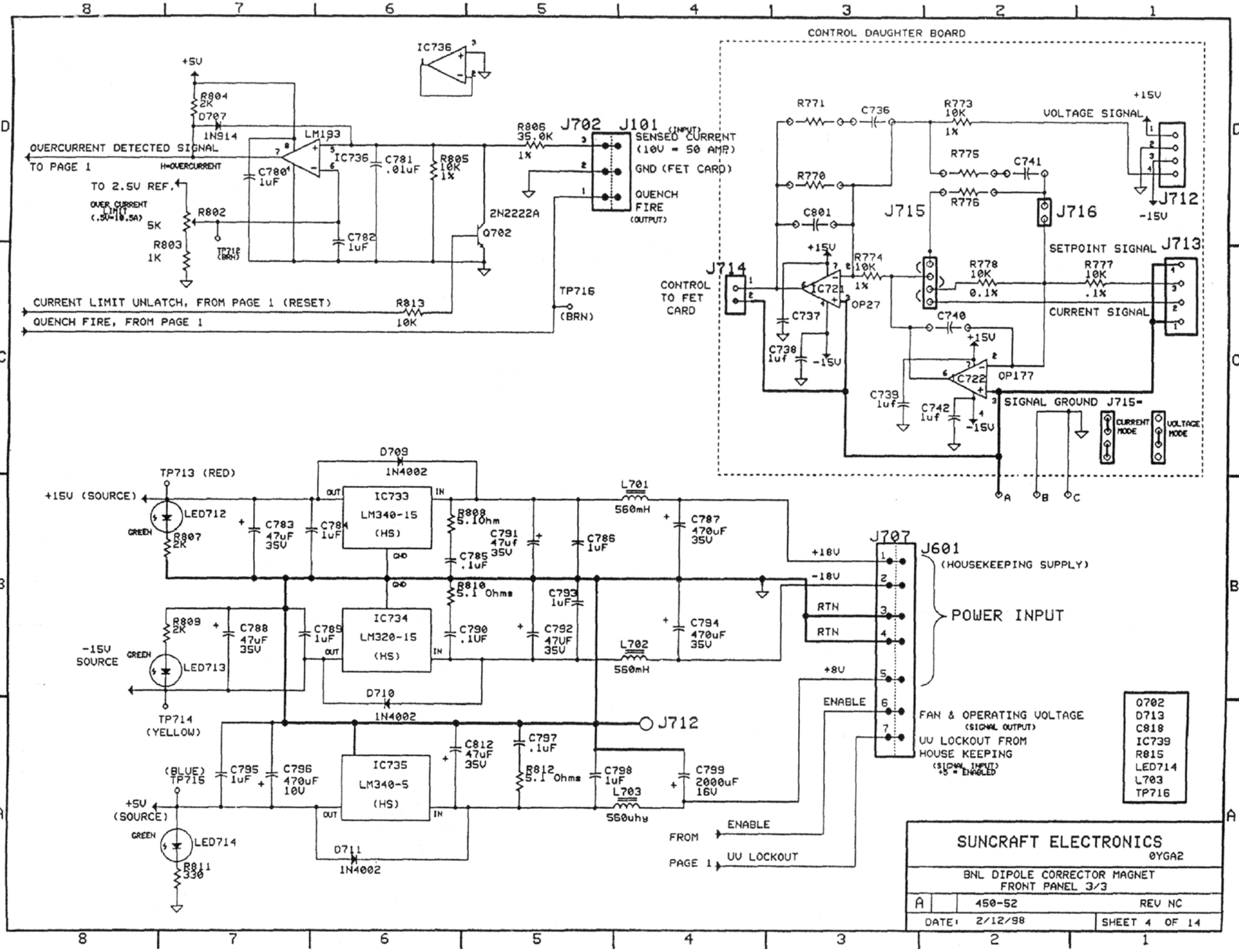
CONTROL DAUGHTER BOARD
OVERCURRENT DETECTED SIGNAL
TO PAGE 1
H=OVERCURRENT
TO 2.5V REF.
OVER CURRENT LIMIT (.5V=10.5A)
CURRENT LIMIT UNLATCH, FROM PAGE 1 (RESET)
QUENCH FIRE, FROM PAGE 1
SENSED CURRENT (10V = 50 AMP)
GND (FET CARD)
QUENCH FIRE (OUTPUT)
VOLTAGE SIGNAL
SETPOINT SIGNAL
CURRENT SIGNAL
CONTROL TO FET CARD
SIGNAL GROUND J715=
CURRENT MODE
VOLTAGE MODE
TP713 (RED)
+15V (SOURCE)
-15V SOURCE
TP714 (YELLOW)
(BLUE) TP715
+5V (SOURCE)
IC733 LM340-15 (HS)
IC734 LM320-15 (HS)
IC735 LM340-5 (HS)
POWER INPUT
(HOUSEKEEPING SUPPLY)
FAN & OPERATING VOLTAGE (SIGNAL OUTPUT)
UV LOCKOUT FROM HOUSE KEEPING (SIGNAL INPUT) +5 = ENABLED
FROM PAGE 1
ENABLE
UV LOCKOUT
Q702
D713
C818
IC739
R815
LED714
L703
TP716
SUNCRAFT ELECTRONICS
0YGA2
BNL DIPOLE CORRECTOR MAGNET
FRONT PANEL 3/3
A
450-52
REV NC
DATE: 2/12/98
SHEET 4 OF 14