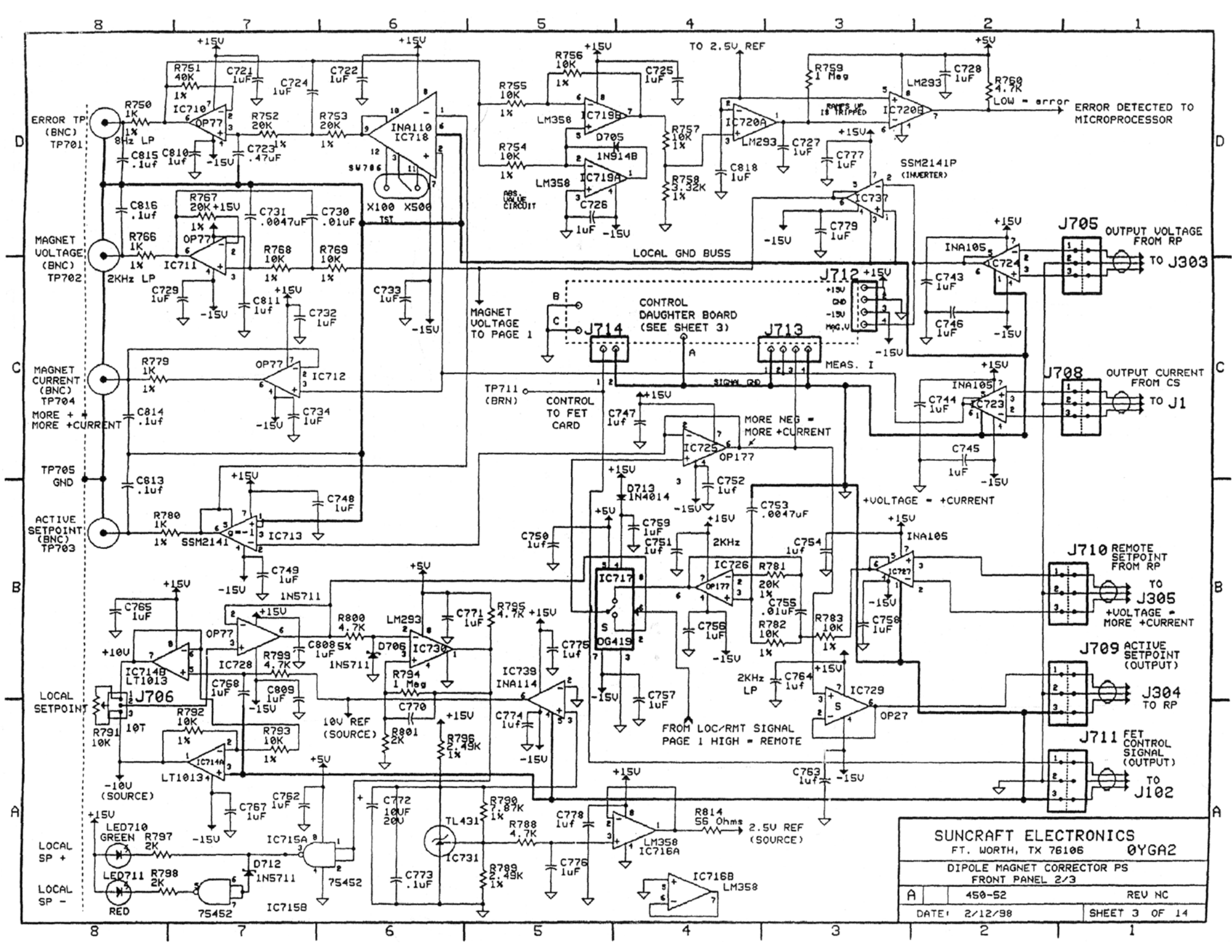
ERROR TP (BNC) TP701
MAGNET VOLTAGE (BNC) TP702
MAGNET CURRENT (BNC) TP704
MORE + MORE +CURRENT
TP705 GND
ACTIVE SETPOINT (BNC) TP703
LOCAL SETPOINT
LOCAL SP +
LOCAL SP -
8Hz LP
2KHz LP
ABS. VALUE CIRCUIT
TO 2.5V REF
LOW = error
ERROR DETECTED TO MICROPROCESSOR
SSM2141P (INVERTER)
LOCAL GND BUSS
MAGNET VOLTAGE TO PAGE 1
CONTROL DAUGHTER BOARD (SEE SHEET 3)
MEAS. I
SIGNAL GND
TP711 (BRN)
CONTROL TO FET CARD
MORE NEG = MORE +CURRENT
+VOLTAGE = +CURRENT
OUTPUT VOLTAGE FROM RP
TO J303
OUTPUT CURRENT FROM CS
TO J1
REMOTE SETPOINT FROM RP
TO J305
+VOLTAGE = MORE +CURRENT
ACTIVE SETPOINT (OUTPUT)
J304 TO RP
FET CONTROL SIGNAL (OUTPUT)
TO J102
10V REF (SOURCE)
-10V (SOURCE)
FROM LOC/RMT SIGNAL PAGE 1 HIGH = REMOTE
2.5V REF (SOURCE)
SUNCRAFT ELECTRONICS
FT. WORTH, TX 76106
0YGA2
DIPOLE MAGNET CORRECTOR PS
FRONT PANEL 2/3
A
450-52
REV NC
DATE: 2/12/98
SHEET 3 OF 14