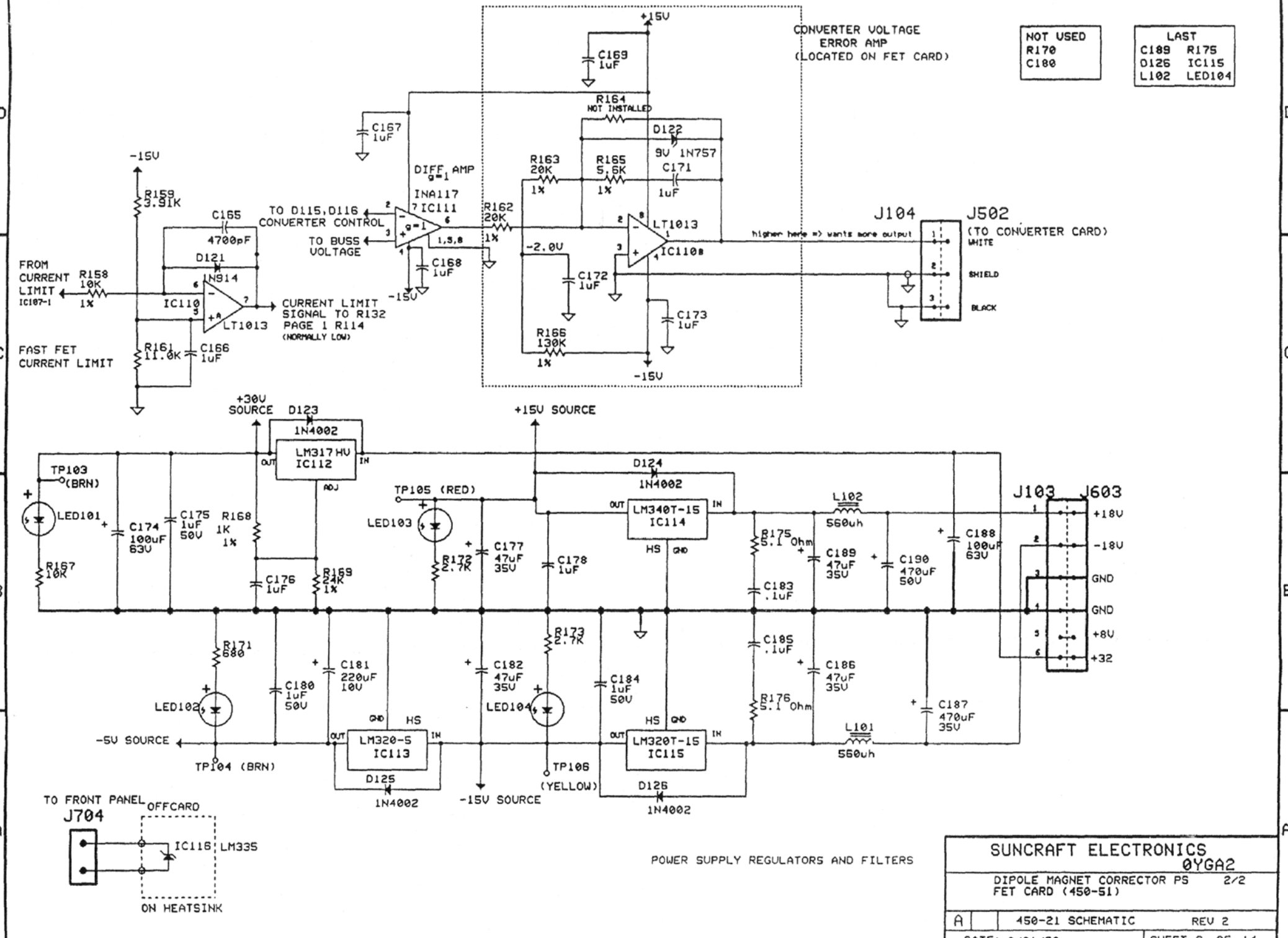
CONVERTER VOLTAGE ERROR AMP (LOCATED ON FET CARD)
NOT USED
R170
C180
LAST
C189 R175
D126 IC115
L102 LED104
+15V
C169 1uF
R164 NOT INSTALLED
D122 9V 1N757
C171 1uF
R163 20K 1%
R165 5.6K 1%
C167 1uF
DIFF AMP g=1
INA117 IC111
TO D115,D116 CONVERTER CONTROL
TO BUSS VOLTAGE
R162 20K 1%
C168 1uF
-15V
-2.0V
LT1013 IC110B
higher here => wants more output
J104
J502
(TO CONVERTER CARD)
WHITE
SHIELD
BLACK
C172 1uF
C173 1uF
R166 130K 1%
-15V
R159 3.91K
C165 4700pF
D121 1N914
FROM CURRENT LIMIT IC107-1
R158 10K 1%
IC110 LT1013
CURRENT LIMIT SIGNAL TO R132 PAGE 1 R114 (NORMALLY LOW)
FAST FET CURRENT LIMIT
R161 11.0K
C166 1uF
+30V SOURCE
D123 1N4002
LM317HV IC112
OUT IN ADJ
+15V SOURCE
D124 1N4002
LM340T-15 IC114
HS GND
TP103 (BRN)
LED101
C174 100uF 63V
C175 1uF 50V
R168 1K 1%
R167 10K
C176 1uF
R169 24K 1%
TP105 (RED)
LED103
R172 2.7K
C177 47uF 35V
C178 1uF
L102 560uh
R175 5.1 Ohm
C189 47uF 35V
C190 470uF 50V
C188 100uF 63V
C183 .1uF
J103
J603
+18V
-18V
GND
GND
+8V
+32
R171 680
LED102
C180 1uF 50V
C181 220uF 10V
C182 47uF 35V
R173 2.7K
LED104
C184 1uF 50V
C185 .1uF
C186 47uF 35V
R176 5.1 Ohm
C187 470uF 35V
L101 560uh
-5V SOURCE
TP104 (BRN)
LM320-5 IC113
D125 1N4002
-15V SOURCE
TP106 (YELLOW)
LM320T-15 IC115
D126 1N4002
TO FRONT PANEL
J704
OFFCARD
IC116 LM335
ON HEATSINK
POWER SUPPLY REGULATORS AND FILTERS
SUNCRAFT ELECTRONICS
0YGA2
DIPOLE MAGNET CORRECTOR PS 2/2
FET CARD (450-51)
A
450-21 SCHEMATIC
REV 2
DATE: 8/01/98
SHEET 6 OF 14