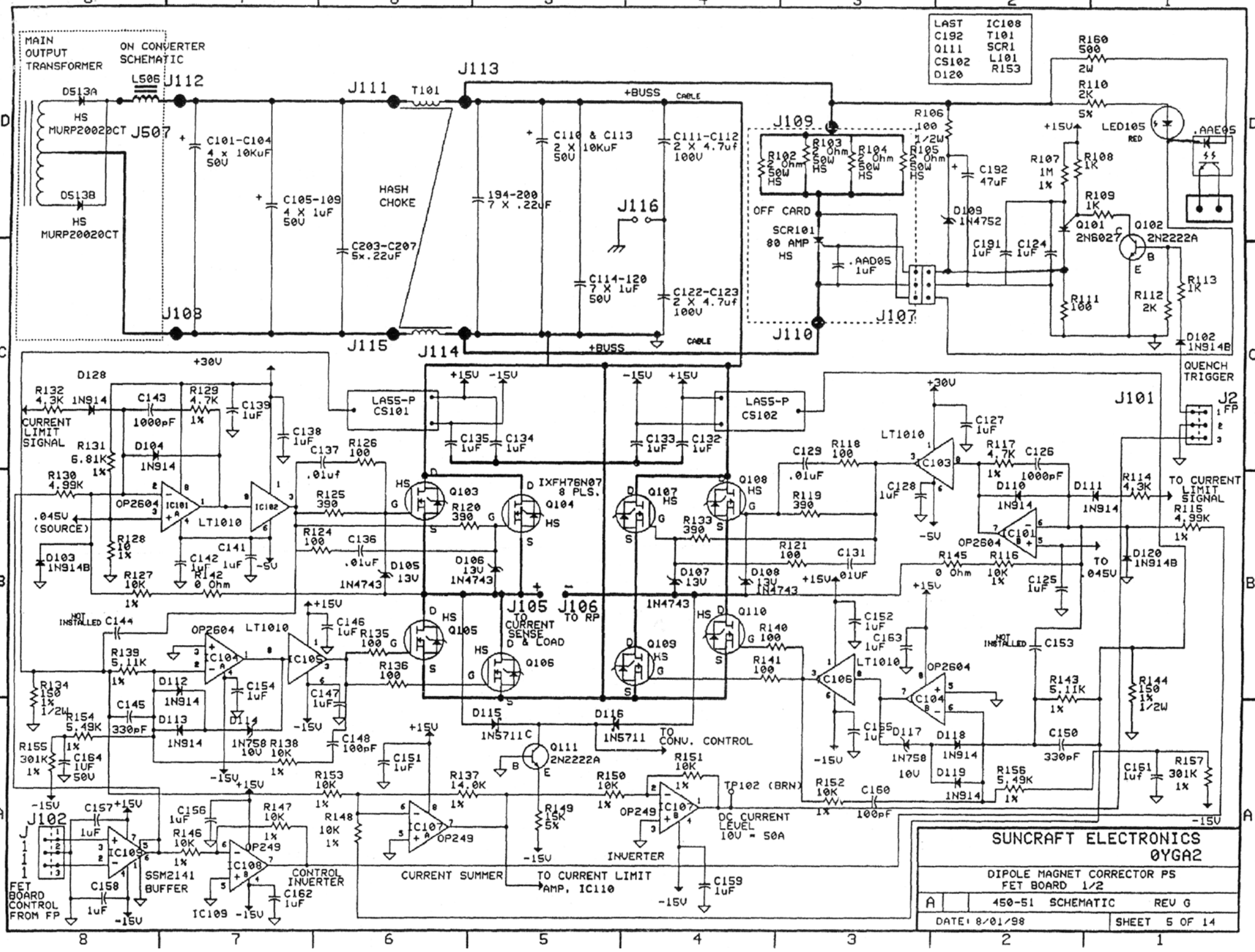
MAIN OUTPUT TRANSFORMER
ON CONVERTER SCHEMATIC
LAST C192 Q111 CS102 D120
IC108 T101 SCR1 L101 R153
D513A
HS MURP20020CT
D513B
HS MURP20020CT
L506
J112
J507
J111
T101
J113
+BUSS
CABLE
J109
J116
J108
J115
J114
J110
J107
J101
J2 FP
J102
J105 TO CURRENT SENSE & LOAD
J106 TO RP
C101-C104 4 x 10KuF 50V
C105-109 4 X 1uF 50V
HASH CHOKE
C203-C207 5x.22uF
C110 & C113 2 X 10KuF 50V
194-200 7 X .22uF
C114-120 7 X 1uF 50V
C111-C112 2 X 4.7uf 100V
C122-C123 2 X 4.7uf 100V
R102 2 Ohm 50W HS
R103 2 Ohm 50W HS
R104 2 Ohm 50W HS
R105 2 Ohm 50W HS
OFF CARD
SCR101 80 AMP HS
.AAD05 1uF
R106 100 1/2W
C192 47uF
D109 1N4752
C191 1uF
C124 1uF
R160 500 2W
R110 2K 5%
+15V
LED105 RED
.AAE05
R107 1M 1%
R108 1K
R109 1K
Q101 2N6027
Q102 2N2222A
R111 100
R112 2K
R113 1K
D102 1N914B
QUENCH TRIGGER
LASS-P CS101
LASS-P CS102
+30V
-15V
D128
R132 4.3K
1N914
CURRENT LIMIT SIGNAL
C143 1000pF
R129 4.7K 1%
C139 1uF
C138 1uF
R131 6.81K 1%
D104 1N914
R130 4.99K
OP2604
IC101
LT1010
IC102
.045V (SOURCE)
R128 10 1%
D103 1N914B
C142 1uF
C141 1uF
R142 0 Ohm
R127 10K 1%
C137 .01uf
R126 100
R125 390
R124 100
C136 .01uF
D105 13V 1N4743
D106 13V 1N4743
Q103 HS
Q104 HS
IXFH76N07 8 PLS.
R120 390
C135 1uF
C134 1uF
Q107 HS
Q108 HS
R133 390
C133 1uF
C132 1uF
D107 13V 1N4743
D108 13V 1N4743
C129 .01uF
R118 100
R119 390
C128 1uF
C127 1uF
LT1010
IC103
R117 4.7K 1%
C126 1000pF
D110 1N914
D111 1N914
R114 4.3K
TO CURRENT LIMIT SIGNAL
R115 4.99K 1%
IC101
OP2604
D120 1N914B
TO .045V
R121 100
C131 .01UF
R145 0 Ohm
R116 10K 1%
C125 1uF
NOT INSTALLED C144
C146 1uF
R135 100
Q105 HS
Q106 HS
R136 100
Q109 HS
Q110 HS
R140 100
R141 100
C152 1uF
C163 1uF
NOT INSTALLED C153
R139 5.11K 1%
R134 150 1% 1/2W
D112 1N914
C154 1uF
C145 330pF
R154 5.49K 1%
D113 1N914
D114 1N758 10V
R138 10K 1%
C147 1uF
C148 100pF
D115 1N5711C
D116 1N5711
TO CONV. CONTROL
Q111 2N2222A
R155 301K 1%
C164 1UF 50V
C151 1uF
R153 10K 1%
R137 14.0K 1%
R150 10K 1%
R151 10K 1%
TP102 (BRN)
DC CURRENT LEVEL 10V = 50A
R152 10K 1%
C160 100pF
C155 1uF
D117 1N758 10V
D118 1N914
D119 1N914
R156 5.49K 1%
C150 330pF
R143 5.11K 1%
R144 150 1% 1/2W
C161 1uf
R157 301K 1%
C157 1uF
C156 1uF
R146 10K 1%
R147 10K 1%
R148 10K 1%
IC107
OP249
R149 15K 5%
IC109
IC108
SSM2141 BUFFER
CONTROL INVERTER
CURRENT SUMMER
TO CURRENT LIMIT AMP, IC110
INVERTER
C158 1uF
C162 1uF
C159 1uF
FET BOARD CONTROL FROM FP
SUNCRAFT ELECTRONICS
0YGA2
DIPOLE MAGNET CORRECTOR PS
FET BOARD 1/2
A
450-51 SCHEMATIC
REV G
DATE: 8/01/98
SHEET 5 OF 14