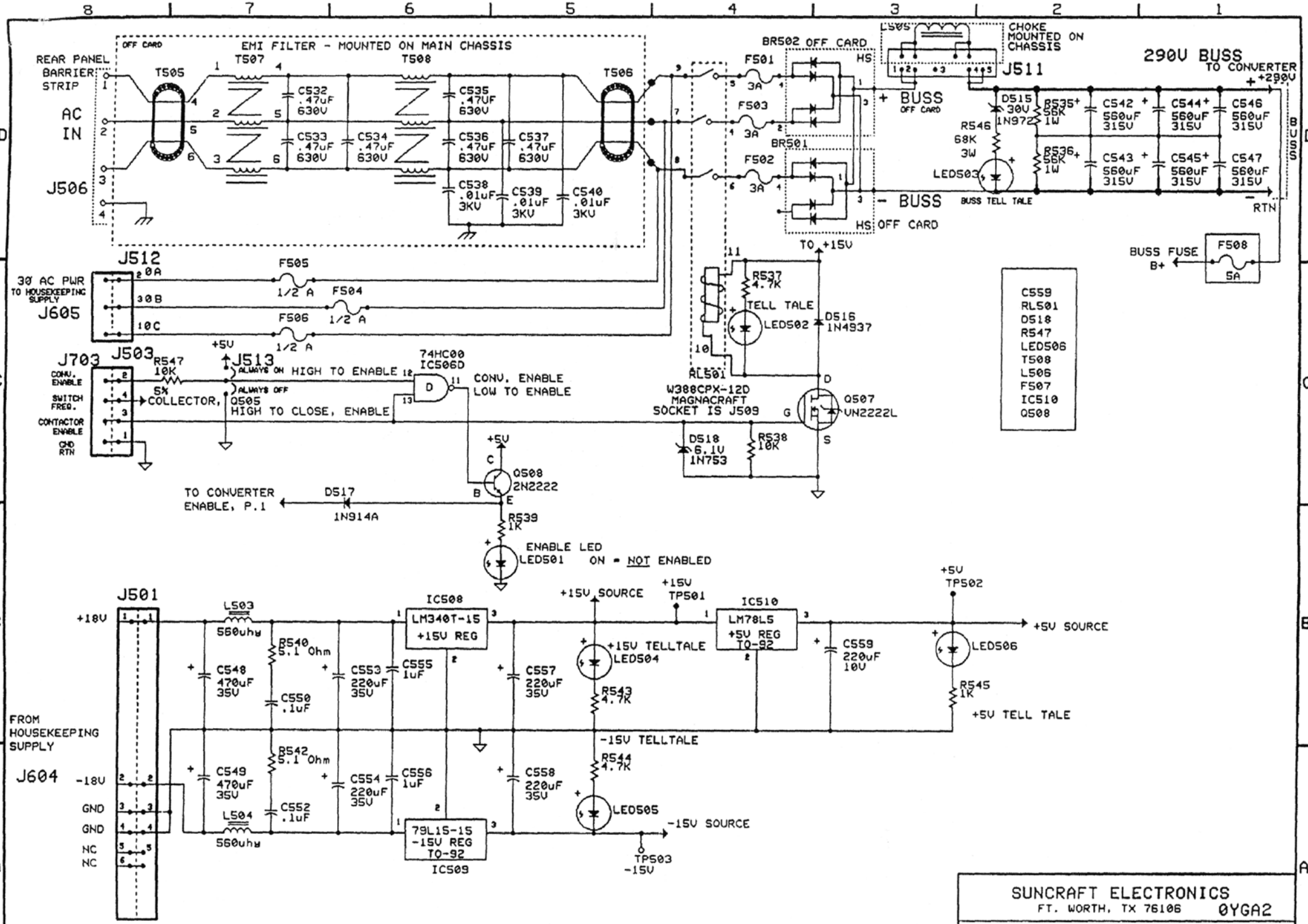

SUNCRAFT ELECTRONICS
FT. WORTH, TX 76106 0YGA2

DIPOLE CORRECTOR MAGNET PS CONVERTER 2/2

A 450-50 SCHEMATIC REV NC

DATE: 12/11/97 SHEET 11 OF 14