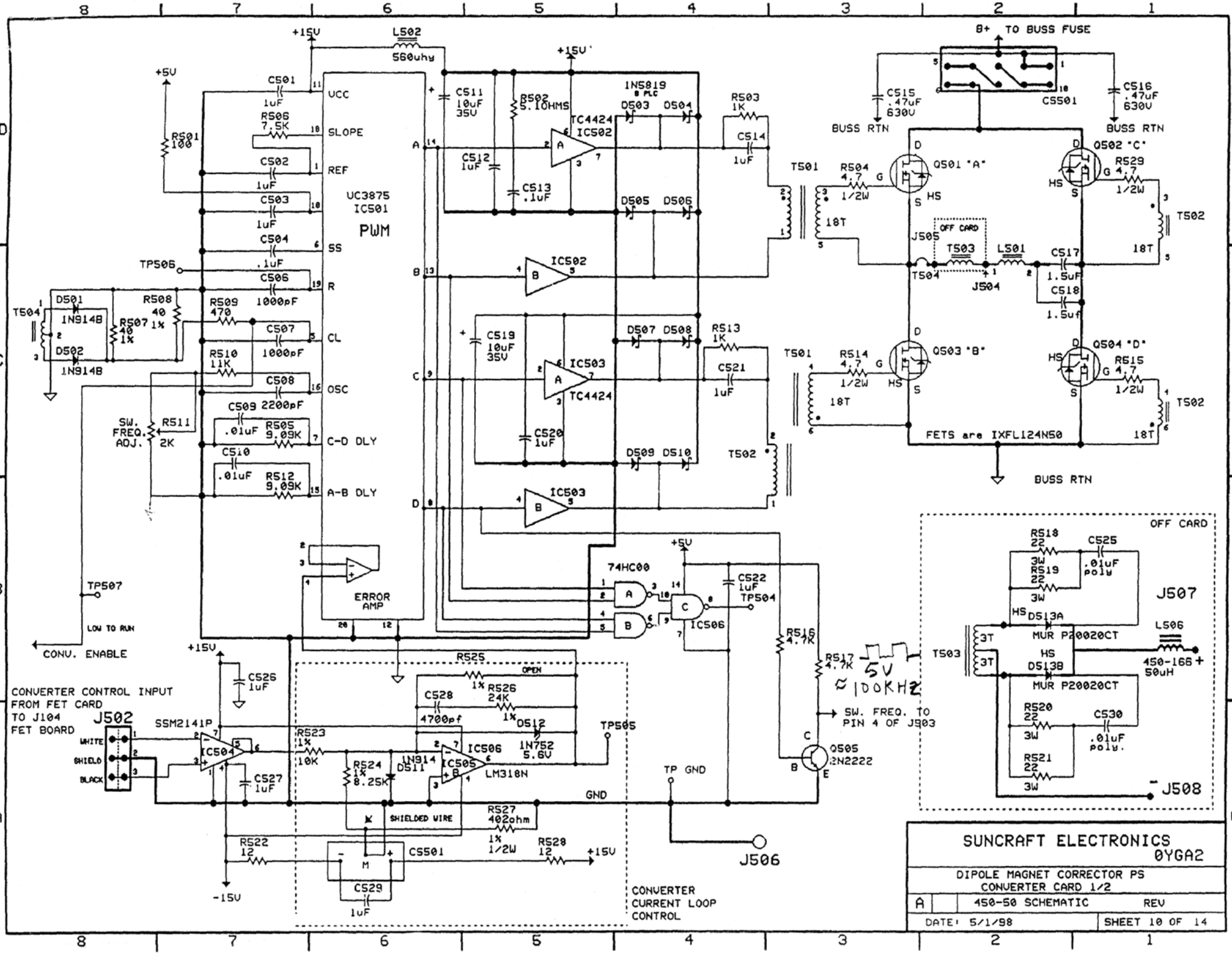
UC3875
IC501
PWM
VCC
SLOPE
REF
SS
R
CL
OSC
C-D DLY
A-B DLY
ERROR AMP
L502
560uhy
+15V
+5V
C501 1uF
R506 7.5K
C502 1uF
C503 1uF
C504 .1uF
C506 1000pF
C507 1000pF
C508
C509 2200pF
.01uF
R505 9.09K
C510 .01uF
R512 9.09K
R501 100
TP506
D501 1N914B
D502 1N914B
T504
R508 40
R507 40 1%
R509 470
R510 11K
SW. FREQ. ADJ.
R511 2K
TP507
LOW TO RUN
CONV. ENABLE
C511 10uF 35V
R502 5.10HMS
C512 1uF
C513 .1uF
TC4424
IC502
IC503
1N5819 8 PLC
D503 D504
D505 D506
D507 D508
D509 D510
R503 1K
C514 1uF
R513 1K
C521 1uF
C519 10uF 35V
C520 1uF
T501
T502
B+ TO BUSS FUSE
CS501
C515 .47uF 630V
C516 .47uF 630V
BUSS RTN
Q501 "A"
Q502 "C"
Q503 "B"
Q504 "D"
R504 4.7 1/2W
R529 4.7 1/2W
R514 4.7 1/2W
R515 4.7 1/2W
HS
18T
J505
OFF CARD
T503
L501
C517 1.5uF
C518 1.5uf
T504
J504
FETS are IXFL124N50
74HC00
IC506
C522 1uF
TP504
R516 4.7K
R517 4.7K
5V
≈ 100KHZ
SW. FREQ. TO PIN 4 OF J503
Q505 2N2222
OFF CARD
R518 22 3W
C525 .01uF poly
R519 22 3W
J507
D513A
MUR P20020CT
D513B
MUR P20020CT
L506
450-166 + 50uH
R520 22 3W
C530 .01uF poly.
R521 22 3W
J508
CONVERTER CONTROL INPUT FROM FET CARD TO J104 FET BOARD
J502
WHITE
SHIELD
BLACK
SSM2141P
IC504
C526 1uF
C527 1uF
R523 1% 10K
R524 1% 8.25K
1N914 D511
IC505
LM318N
R525 1% OPEN
R526 24K 1%
C528 4700pf
D512 1N752 5.6V
TP505
SHIELDED WIRE
R527 402ohm 1% 1/2W
R522 12
R528 12
CS501
C529 1uF
-15V
GND
TP GND
J506
CONVERTER CURRENT LOOP CONTROL
SUNCRAFT ELECTRONICS
0YGA2
DIPOLE MAGNET CORRECTOR PS
CONVERTER CARD 1/2
A
450-50 SCHEMATIC
REV
DATE: 5/1/98
SHEET 10 OF 14