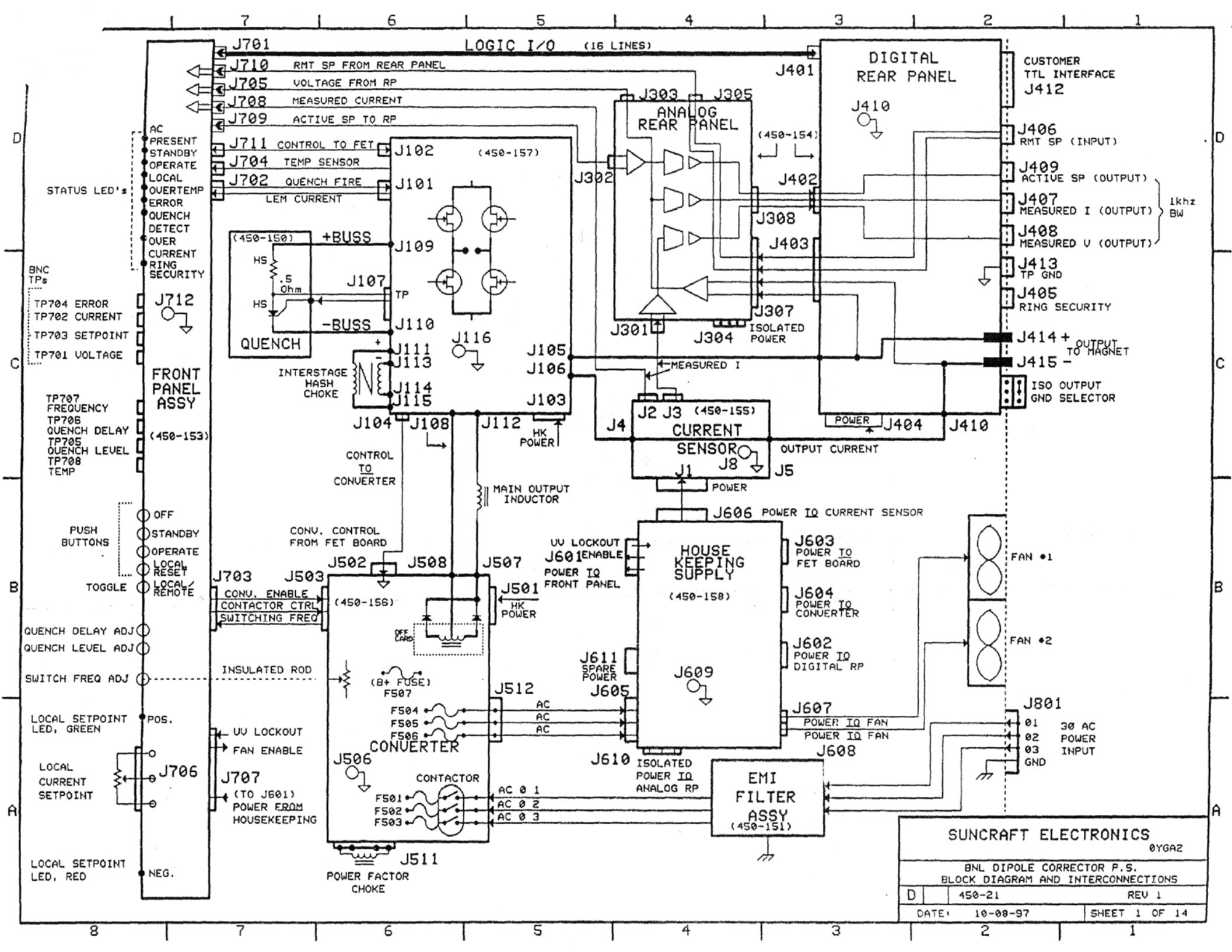
LOGIC I/O (16 LINES)
J701
J710 RMT SP FROM REAR PANEL
J705 VOLTAGE FROM RP
J708 MEASURED CURRENT
J709 ACTIVE SP TO RP
J711 CONTROL TO FET
J704 TEMP SENSOR
J702 QUENCH FIRE
LEM CURRENT
STATUS LED's
AC PRESENT
STANDBY
OPERATE
LOCAL
OVERTEMP
ERROR
QUENCH DETECT
OVER CURRENT
RING SECURITY
BNC TPs
TP704 ERROR
TP702 CURRENT
TP703 SETPOINT
TP701 VOLTAGE
J712
FRONT PANEL ASSY
(450-153)
TP707 FREQUENCY
TP706 QUENCH DELAY
TP705 QUENCH LEVEL
TP708 TEMP
PUSH BUTTONS
OFF
STANDBY
OPERATE
LOCAL RESET
TOGGLE
LOCAL/ REMOTE
QUENCH DELAY ADJ
QUENCH LEVEL ADJ
SWITCH FREQ ADJ
LOCAL SETPOINT LED, GREEN
POS.
LOCAL CURRENT SETPOINT
J706
LOCAL SETPOINT LED, RED
NEG.
J703
CONV. ENABLE
CONTACTOR CTRL
SWITCHING FREQ
UV LOCKOUT
FAN ENABLE
J707
(TO J601)
POWER FROM HOUSEKEEPING
INSULATED ROD
J102
J101
(450-157)
J109
J107
TP
J110
J116
J111
J113
J114
J115
J105
J106
J103
J104
J108
J112
HK POWER
(450-150)
+BUSS
HS
.5 Ohm
HS
-BUSS
QUENCH
INTERSTAGE HASH CHOKE
CONTROL TO CONVERTER
MAIN OUTPUT INDUCTOR
CONV. CONTROL FROM FET BOARD
J502
J508
J507
J503
(450-156)
J501
HK POWER
OFF CARD
(B+ FUSE)
F507
J512
F504
F505
F506
AC
AC
AC
CONVERTER
J506
CONTACTOR
F501
F502
F503
AC Ø 1
AC Ø 2
AC Ø 3
J511
POWER FACTOR CHOKE
J303
J305
ANALOG REAR PANEL
J302
J301
J304
ISOLATED POWER
(450-154)
J402
J308
J403
J307
MEASURED I
J401
DIGITAL REAR PANEL
J410
CUSTOMER TTL INTERFACE
J412
J406
RMT SP (INPUT)
J409
ACTIVE SP (OUTPUT)
J407
MEASURED I (OUTPUT)
J408
MEASURED V (OUTPUT)
1khz BW
J413
TP GND
J405
RING SECURITY
J414 +
J415 -
OUTPUT TO MAGNET
ISO OUTPUT GND SELECTOR
POWER
J404
J410
J2 J3
(450-155)
J4
CURRENT SENSOR
J8
J5
OUTPUT CURRENT
J1
POWER
J606
POWER IQ CURRENT SENSOR
UV LOCKOUT
J601 ENABLE
POWER IQ FRONT PANEL
HOUSE KEEPING SUPPLY
(450-158)
J603
POWER IQ FET BOARD
J604
POWER IQ CONVERTER
J602
POWER IQ DIGITAL RP
J611
SPARE POWER
J609
J605
J607
POWER IQ FAN
POWER IQ FAN
J608
J610
ISOLATED POWER IQ ANALOG RP
EMI FILTER ASSY
(450-151)
FAN #1
FAN #2
J801
01
02
03
GND
30 AC POWER INPUT
SUNCRAFT ELECTRONICS
0YGA2
BNL DIPOLE CORRECTOR P.S.
BLOCK DIAGRAM AND INTERCONNECTIONS
D
450-21
REV 1
DATE: 10-08-97
SHEET 1 OF 14