SnakeInterCon1.skf
1/22/04
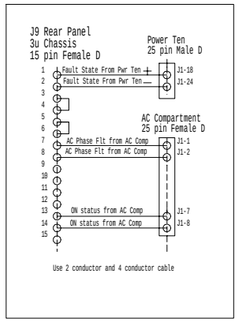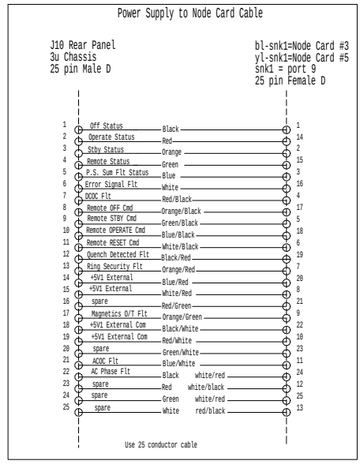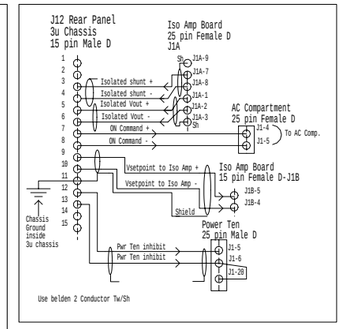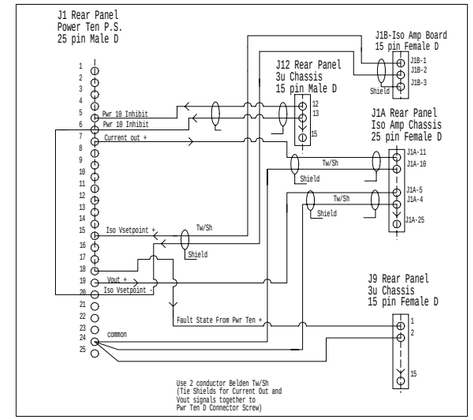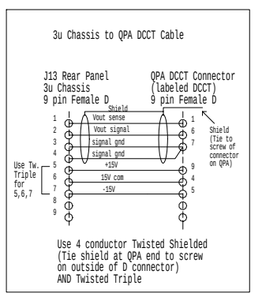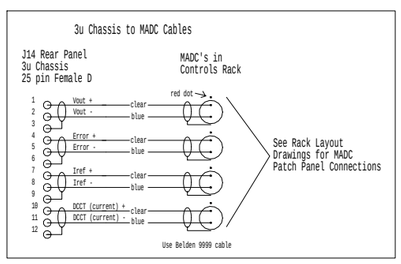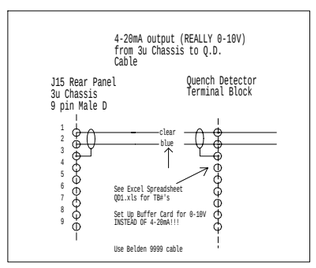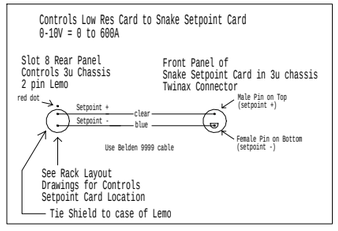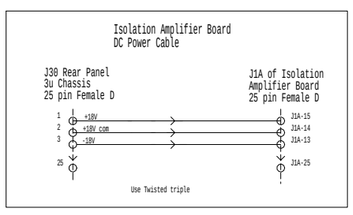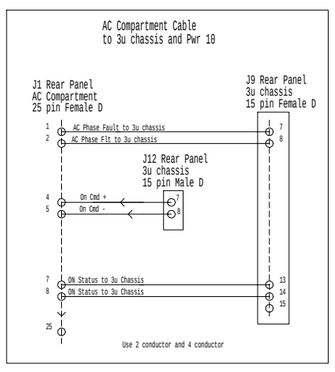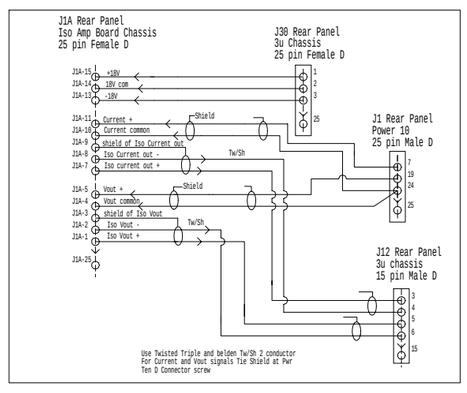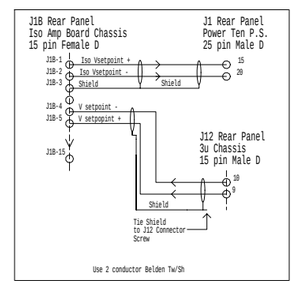
Snake 1 Interconnection Diagram