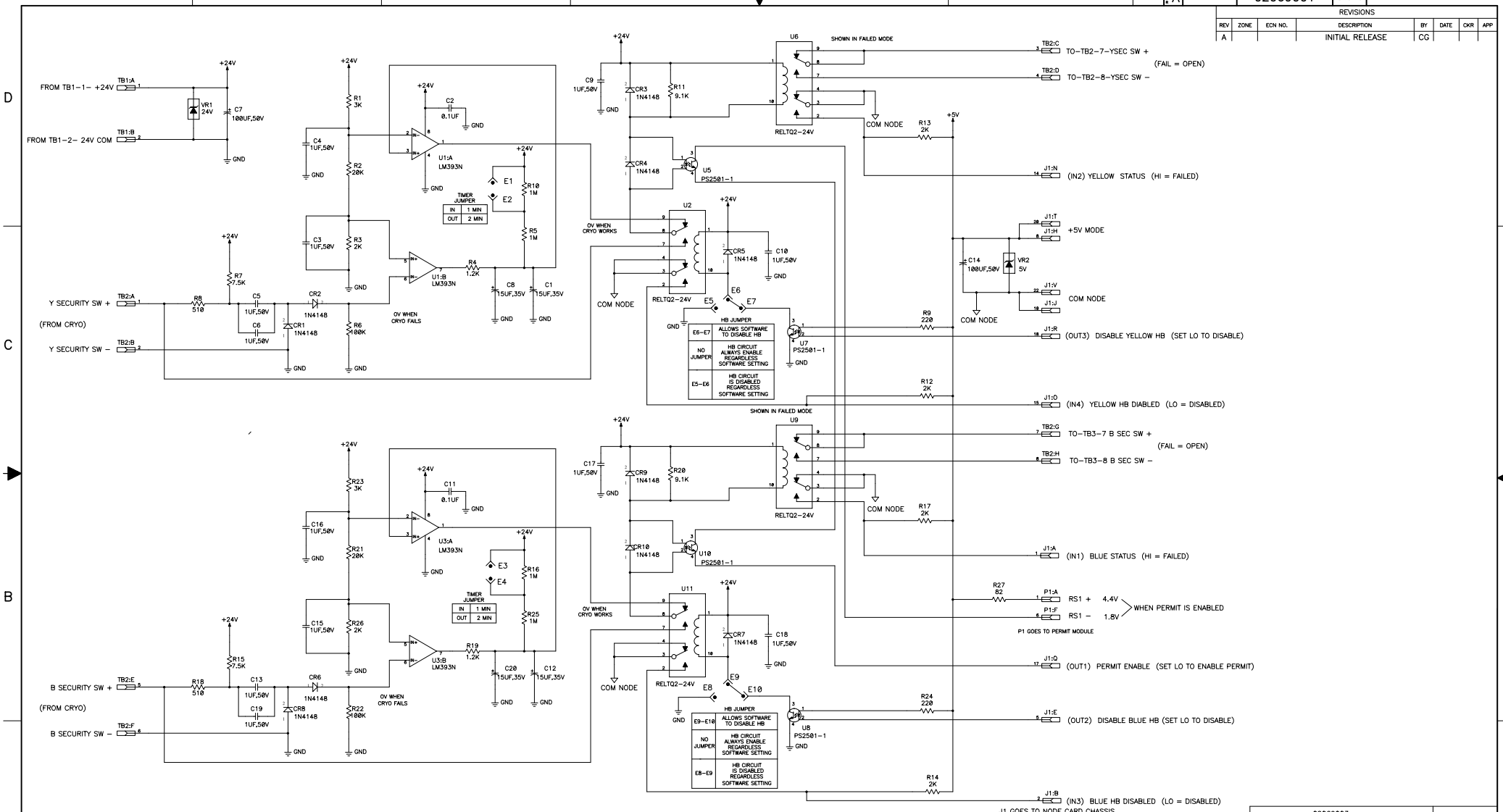

REV	ZONE	ECN NO.	DESCRIPTION	BY	DATE	CKR	APP
A			INITIAL RELEASE	CG			

OUTSTANDING ECN NUMBERS	INTERPRET IN GENERAL ACCORDANCE WITH ASME Y14.24M-1989
	UNLESS OTHERWISE SPECIFIED
	DIMENSIONS ARE IN INCHES DECIMAL TOLERANCES .X ±.06 .XX ±.02 .XXX ±.005 ANGULAR TOLERANCE ±1°
	BREAK SHARP EDGES
	FINISH MAX. MIN.

RHIC

DRAWN BY	C.GUARINO	7-11-02
DESIGN APPROVAL		
CHECKED BY		
ENGINEER APPROVAL		
SUPERVISOR APPROVAL		
S.A. APPROVAL		

02069003 — USED ON DRAWING NUMBER — NO. PER ASS'Y

BROOKHAVEN NATIONAL LABORATORY
BROOKHAVEN SCIENCE ASSOCIATES
UPTON, N.Y. 11973

TITLE: CORRECTOR POWER SUPPLIES
RING SECURITY HEARTBEAT BOARD
SCHEMATIC DIAGRAM

SIZE D — DRAWING NUMBER: 02069001 — REV. A

SCALE: NONE — WEIGHT: — SHEET 1 OF 1

V K A — 1 OF 1 SHT — 02069001 — DWG NO