REV	1 OF 1 SHT	26070004	DWG NO
B			

REVISIONS

REV	ZONE	ECN NO.	DESCRIPTION	BY	DATE	CKR	APP
A			INITIAL RELEASE				
B		CAD0393	REVISED PER ECN	TT	11/02		

NOTES:

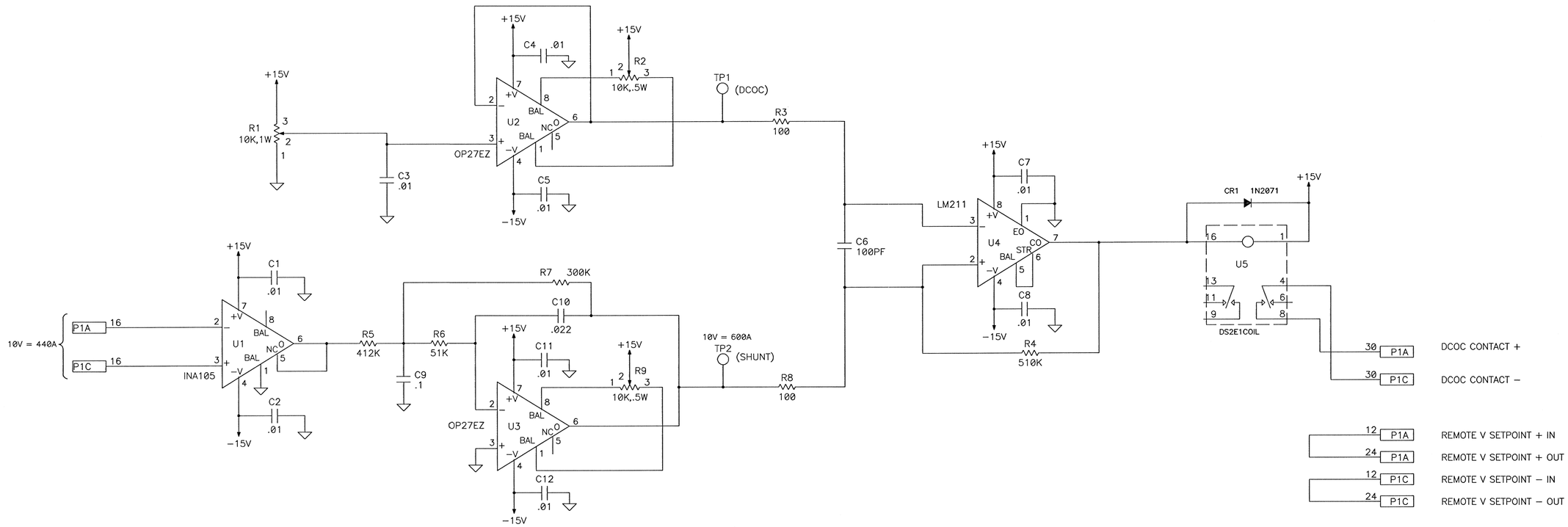

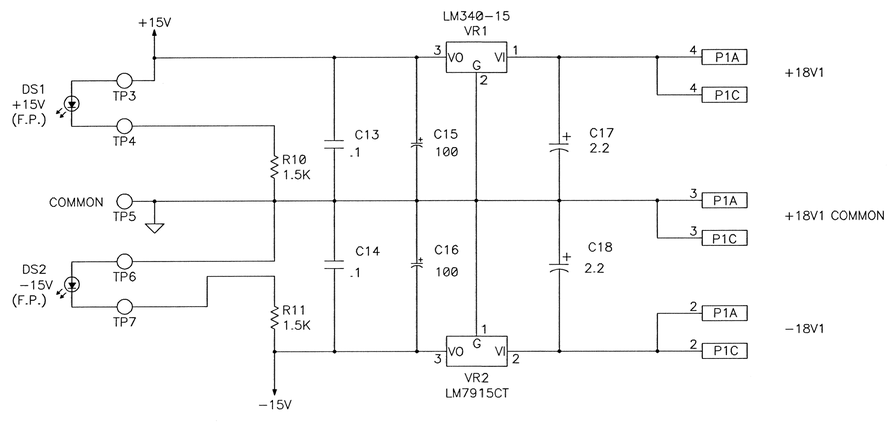

NOTES:
1. THIS DRAWING TO BE USED IN CONJUNCTION WITH PARTS LIST LOCATED ON APPROPRIATE ASSEMBLY DRAWING, REFER TO ASSEMBLY DRAWING LOCATED IN USED ON BLOCK FOR PARTS LIST WHICH DEPICTS VALUES AND REFERENCE DESIGNATIONS OF COMPONENTS THAT VARY WITH DASH NO.
2. UNLESS OTHERWISE SPECIFIED:
   RESISTOR VALUES ARE GIVEN IN OHMS
   CAPACITORS VALUES ARE GIVEN IN MICROFARADS
3. LAST REFERENCE DESIGNATION USED U5,R11,C18,P1,CR1,VR2 &TP7.

−3	−2	−1	REF. DESIGNATOR	ITEM NO.	DESCRIPTION	MATL,DWG NO.,BNL NO.
QTY REQD						

OUTSTANDING ECN NUMBERS

INTERPRET IN GENERAL ACCORDANCE WITH ASME Y14.24M−1989

UNLESS OTHERWISE SPECIFIED

DIMENSIONS ARE IN INCHES
DECIMAL TOLERANCES
.X .06
.XX .02
.XXX .005
ANGULAR TOLERANCE ±1°

Q.A. A3

NEXT ASSEMBLY 26070006

RHIC

DRAWN BY	D.MULLALY	12−15−00
DESIGN APPROVAL	F.CLARKE	1−27−01
CHECKED BY	D.RUSSO	1−27−01
ENGINEER APPROVAL	D.RUSSO	1−27−01
SUPERVISOR APPROVAL	J.SANDBERG	1−31−01
Q.A. APPROVAL		

COLLIDER−ACCELERATOR DEPARTMENT
BROOKHAVEN NATIONAL LABORATORY
UPTON, N.Y. 11973

TITLE: RHIC POWER SUPPLY SCHEMATIC DIAGRAM DCOC CARD FOR SNAKE P.S.

SIZE D | DRAWING NUMBER: 26070004 | REV. B

SCALE: | WEIGHT: | SHEET 1 OF 1