REVISIONS							
REV	ZONE	ECN NO.	DESCRIPTION	BY	DATE	CKR	APP
A			INITIAL RELEASE	TT	12/00	DB	DB
B		CAD0392	SEE ECN	TT	11/02	DB	DB
C		CAD0576	SEE ECN	TT	8/03	DB	DB
D		CAD0630	REVISED PER ECN	RP	12/03	DB	DB
E		CAD0715	REVISED PER ECN				

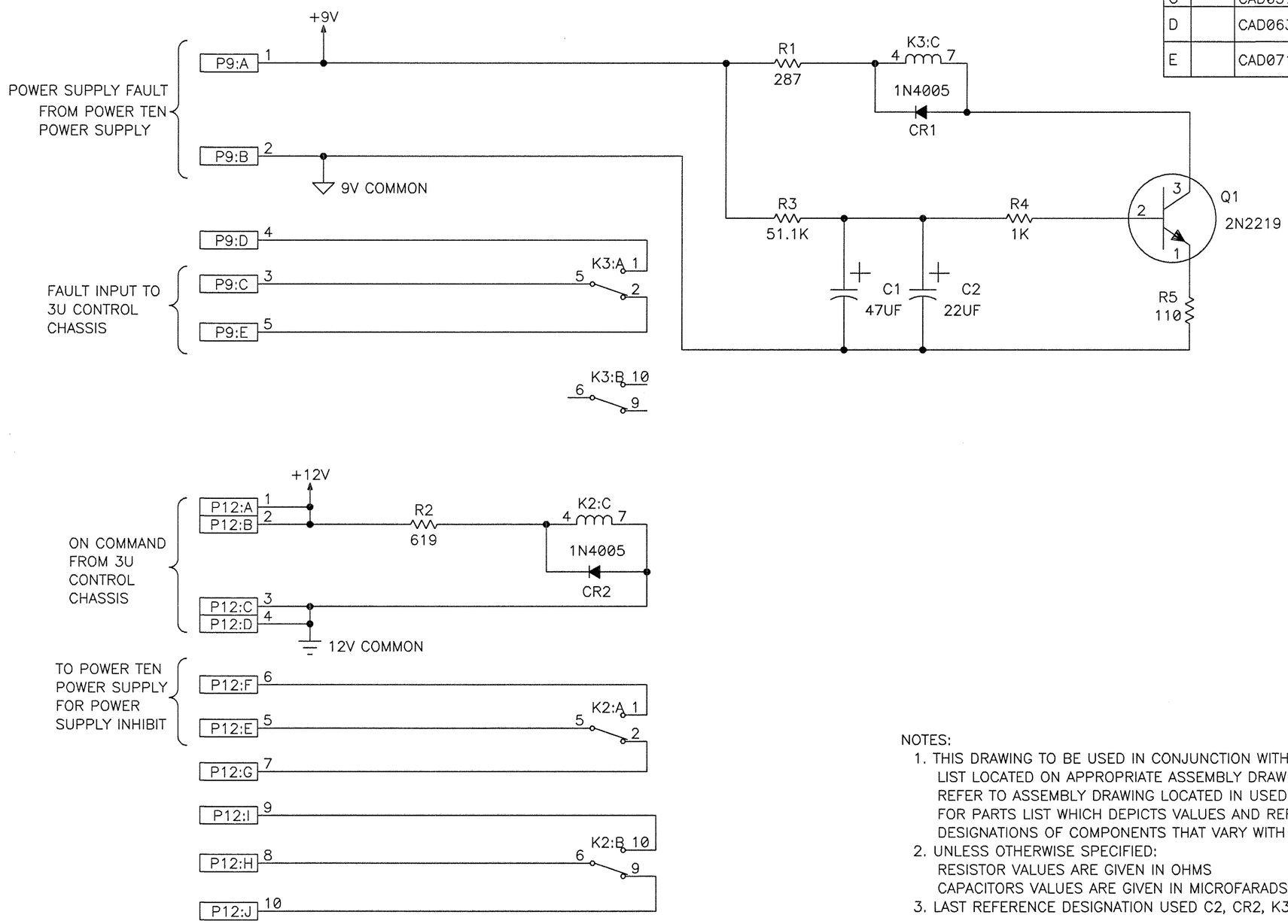

NOTES:

1. THIS DRAWING TO BE USED IN CONJUNCTION WITH PARTS LIST LOCATED ON APPROPRIATE ASSEMBLY DRAWING, REFER TO ASSEMBLY DRAWING LOCATED IN USED ON BLOCK FOR PARTS LIST WHICH DEPICTS VALUES AND REFERENCE DESIGNATIONS OF COMPONENTS THAT VARY WITH DASH NO.
2. UNLESS OTHERWISE SPECIFIED:
   RESISTOR VALUES ARE GIVEN IN OHMS
   CAPACITORS VALUES ARE GIVEN IN MICROFARADS
3. LAST REFERENCE DESIGNATION USED C2, CR2, K3, P12, Q1 AND R5.

26070003
NEXT ASSEMBLY

OUTSTANDING ECN

INTERPRET IN GENERAL ACCORDANCE WITH ASME Y14.24M-1989

UNLESS OTHERWISE SPECIFIED

DIMENSIONS ARE IN INCHES
DECIMAL TOLERANCES
.X ± .030
.XX ± .015
.XXX ± .005
ANGULAR TOLERANCE ± 1°

NA FINISH

BREAK SHARP EDGES
MAX. .03 MIN. .01

RHIC

DRAWN BY	TONY TANZA	12/12/00
DESIGN APPROVAL	F.CLARKE	12/15/00
CHECKED BY	DON BRUNO	12/15/00
ENGINEER APPROVAL	DON BRUNO	12/15/00
SUPERVISOR APPROVAL	JON SANDBERG	12/15/00
Q.A. APPROVAL		
C.E.E. APPROVAL		

COLLIDER-ACCELERATOR DEPARTMENT
BROOKHAVEN NATIONAL LABORATORY
UPTON, N.Y. 11973

TITLE: SCHEMATIC DIAGRAM RELAY BOARD

SIZE C | DRAWING NUMBER: 26070001 | REV. E

Q.A. CATEGORY: A-3 | SCALE: ——— | WEIGHT ——— | SHEET 1 OF 1