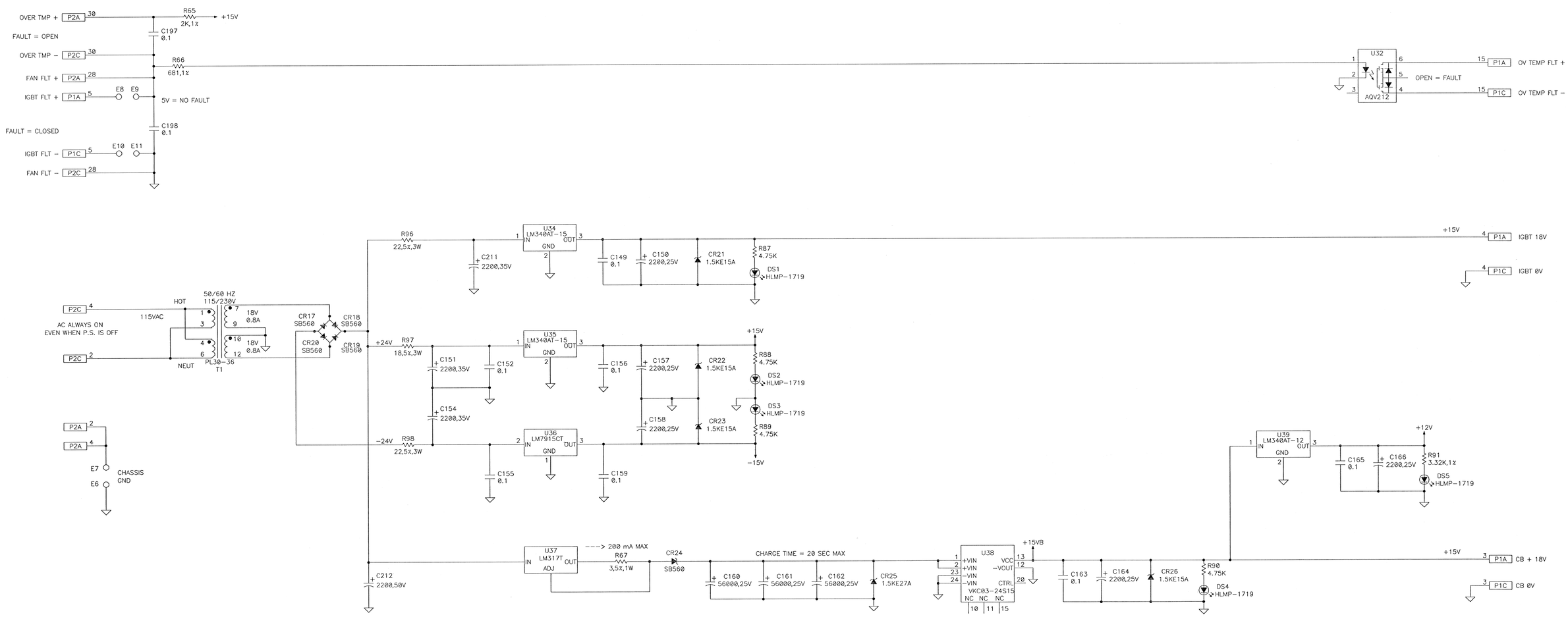

OUTSTANDING ECN
CAD0236

COLLIDER–ACCELERATOR DEPARTMENT BROOKHAVEN NATIONAL LABORATORY UPTON, N.Y. 11973	SIZE E	DRAWING NUMBER: 26049010	REV. B
	Q.A. CATEGORY A 3	SCALE:	WEIGHT:	SHEET 3 OF 3

DWG NO 26049010 SHT 3 OF 3 REV B