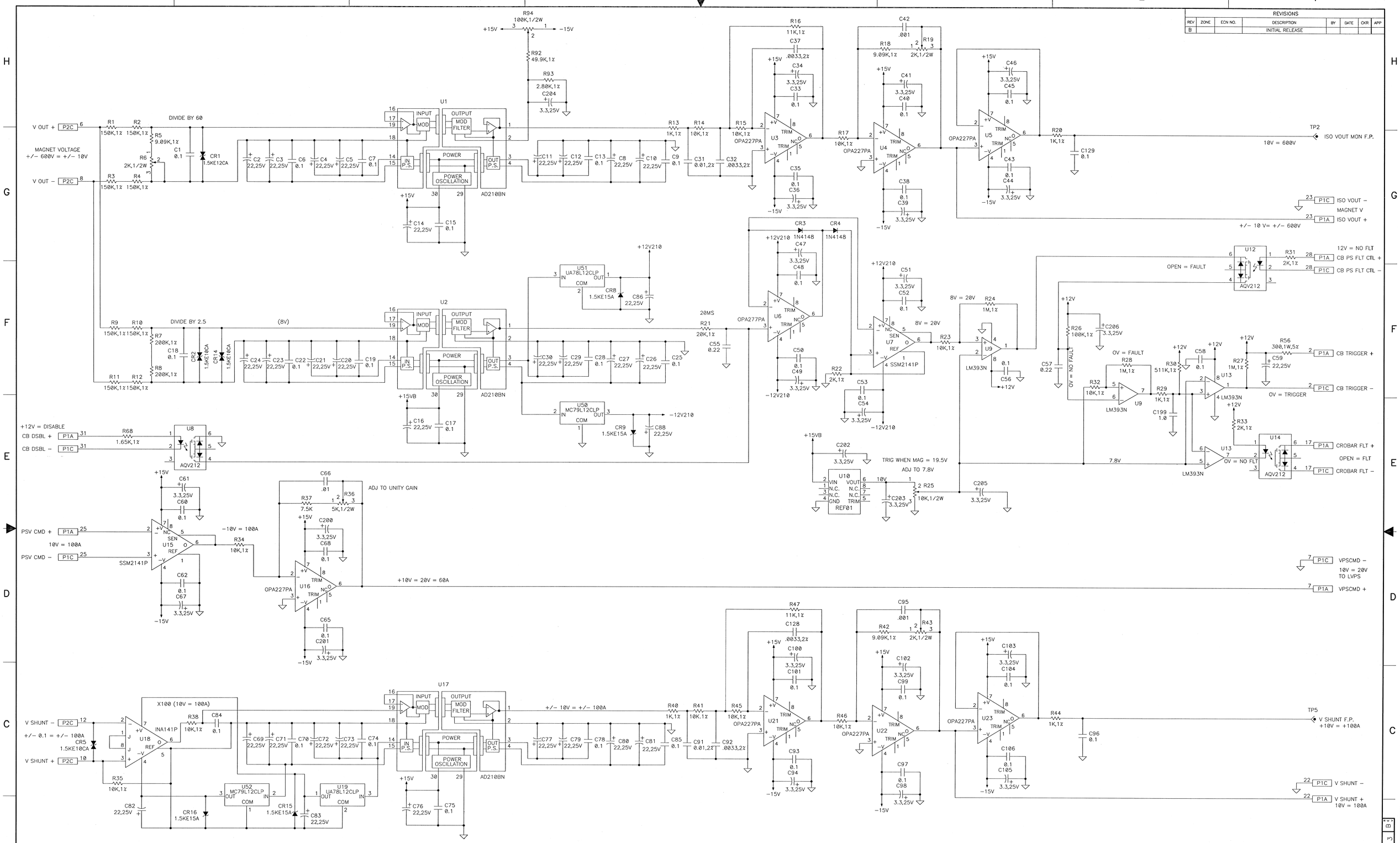

OUTSTANDING ECN
CAD0236

NOTES:
1. THIS DRAWING TO BE USED IN CONJUNCTION WITH PARTS LIST LOCATED ON APPROPRIATE ASSEMBLY DRAWING, REFER TO ASSEMBLY DRAWING LOCATED IN USED ON BLOCK FOR PARTS LIST WHICH DEPICTS VALUES AND REFERENCE DESIGNATIONS OF COMPONENTS THAT VARY WITH DASH NO.
2. UNLESS OTHERWISE SPECIFIED:
   RESISTOR VALUES ARE GIVEN IN OHMS
   CAPACITORS VALUES ARE GIVEN IN MICROFARADS
3. LAST REFERENCE DESIGNATION USED U52, R86 ,C286 , CR27, TP5, P2, T1, E7.
4. R60 IS SOLDERED TO THE PRIMARY SIDE OF THE PC BD ONE SIDE TO E4 AND THE OTHER SIDE TO E5. R60 IS CALLED A SHEET CONNECTOR TYPE COMPONENT.

REVISIONS						
REV	ZONE	ECN NO.	DESCRIPTION	BY	DATE	CKR	APP
B			INITIAL RELEASE				

26049012		
USED ON DRAWING NO.	QUANTITY PER ASSY	
APPLICATION		OUTSTANDING ECN

INTERPRET IN GENERAL ACCORDANCE WITH ASME Y14.24M-1989

UNLESS OTHERWISE SPECIFIED

DIMENSIONS ARE IN INCHES
DECIMAL TOLERANCES
.X ±.04
.XX ±.02
.XXX ±.005
ANGULAR TIOLERANCE ±1°

RHIC

DRAWN BY	MIKE JACOBELLIS	2-28-01
DESIGN APPROVAL	T. Charlie	3-5-01
CHECKED BY	W. Fischer	3-5-01
ENGINEER APPROVAL	W. Fischer	3-5-01
SUPERVISOR APPROVAL	J. Sandberg	3/9/01

COLLIDER–ACCELERATOR DEPARTMENT
BROOKHAVEN NATIONAL LABORATORY
UPTON, N.Y. 11973

TITLE:
RHIC
SCHEMATIC DIAGRAM
GAMMA TRANSISTION POWER SUPPLY
ISOLATION BOARD

SIZE: E | DRAWING NUMBER: 26049010 | REV: B

G.A. CATEGORY: A_3 | SCALE: 1:1 | WEIGHT: | SHEET 1 OF 3

DWG NO 26049010 | SHT 1 OF 3 | B

PCAD2000