NOTES:

| REVISIONS | | | | | | | |
|---|---|---|---|---|---|---|---|
| REV | ZONE | ECN NO. | DESCRIPTION | BY | DATE | CKR | APP |
| A | | | INITIAL RELEASE | PF | | ST | ST |
| B | | CAD0410 | AS PER ECN | PF | 6/5/02 | DB | JS |
| C | | CAD0751 | AS PER ECN | PF | 3/1/04 | DB | |

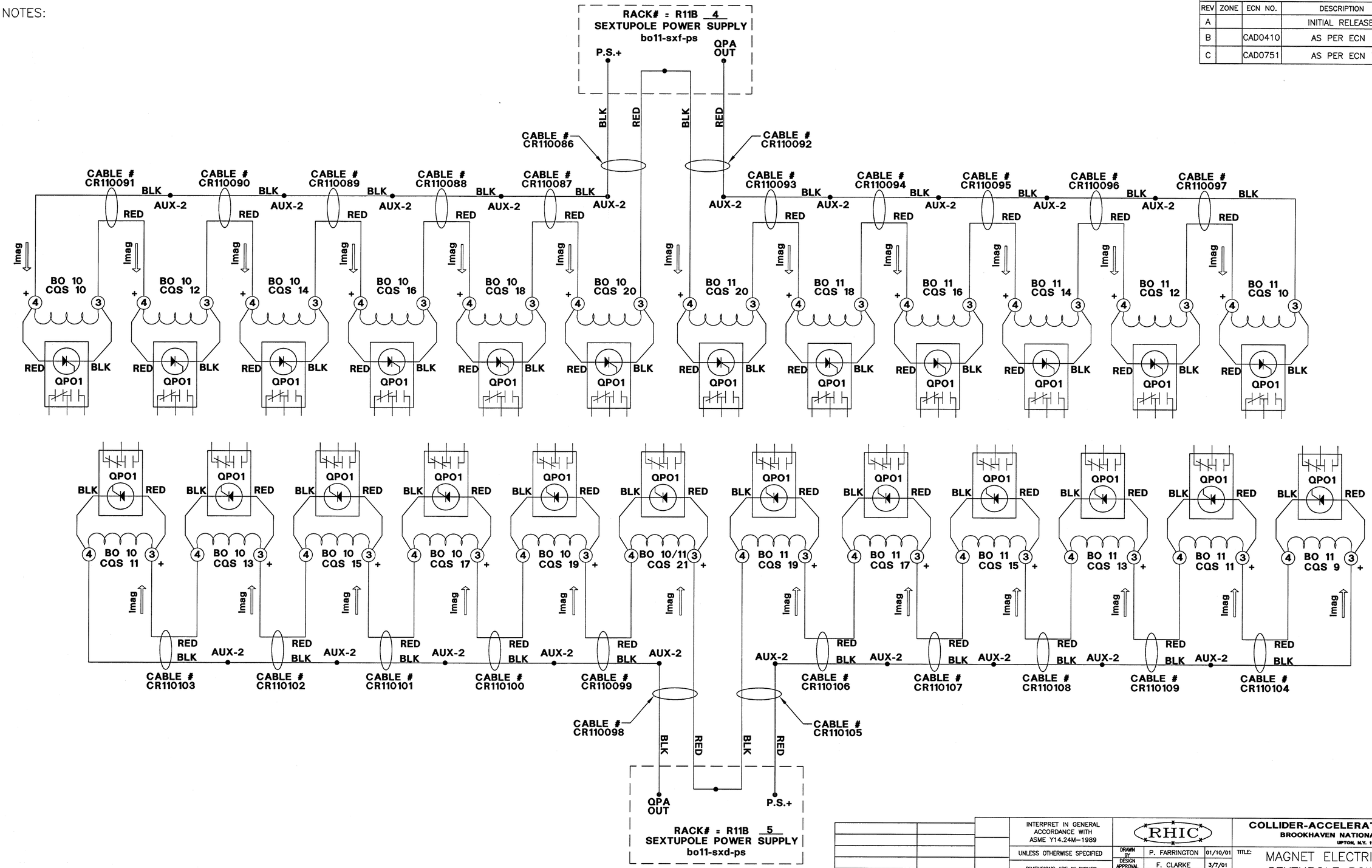


| USED ON DRAWING NO. | QTY. PER ASS'Y. |
|---|---|
| APPLICATION | |

OUTSTANDING ECN

INTERPRET IN GENERAL ACCORDANCE WITH ASME Y14.24M-1989

UNLESS OTHERWISE SPECIFIED

DIMENSIONS ARE IN INCHES
DECIMAL TOLERANCES
.X ± .06
.XX ± .02
.XXX ± .005
ANGULAR TOLERANCE ± 1°

125 FINISH

BREAK SHARP EDGES MAX. .03 MIN. .015

RHIC

| | | |
|---|---|---|
| DRAWN BY | P. FARRINGTON | 01/10/01 |
| DESIGN APPROVAL | F. CLARKE | 3/7/01 |
| CHECKED BY | D. BRUNO | 4/3/01 |
| ENGINEER APPROVAL | D. BRUNO | 4/3/01 |
| SUPERVISOR APPROVAL | J. SANDBERG | 4/2/01 |
| Q.A. APPROVAL | D. PASSARELLO | 4/17/01 |
| PHYSICIST APPROVAL | S. TEPIKIAN | 4/17/01 |

COLLIDER-ACCELERATOR DEPARTMENT
BROOKHAVEN NATIONAL LABORATORY
UPTON, N.Y. 11973

TITLE: MAGNET ELECTRICAL SYSTEM
SEXTUPOLE POWER SUPPLY
BLUE OUTER RING SECTOR 10/11

SIZE D | DRAWING NUMBER: 26015075 | REV. C

Q.A. CATEGORY A-3 | SCALE: 1/1 | WEIGHT: NA | SHEET 1 OF 1

DWG NO 26015075 | SHT 1 OF 1 | REV C