NOTES:

REVISIONS							
REV	ZONE	ECN NO.	DESCRIPTION	BY	DATE	CKR	APP
A			INITIAL RELEASE	PF		ST	ST
B		CAD0405	AS PER ECN	PF	6/5/02	DB	JS
C		CAD0751	AS PER ECN	PF	3/1/04	DB	JS

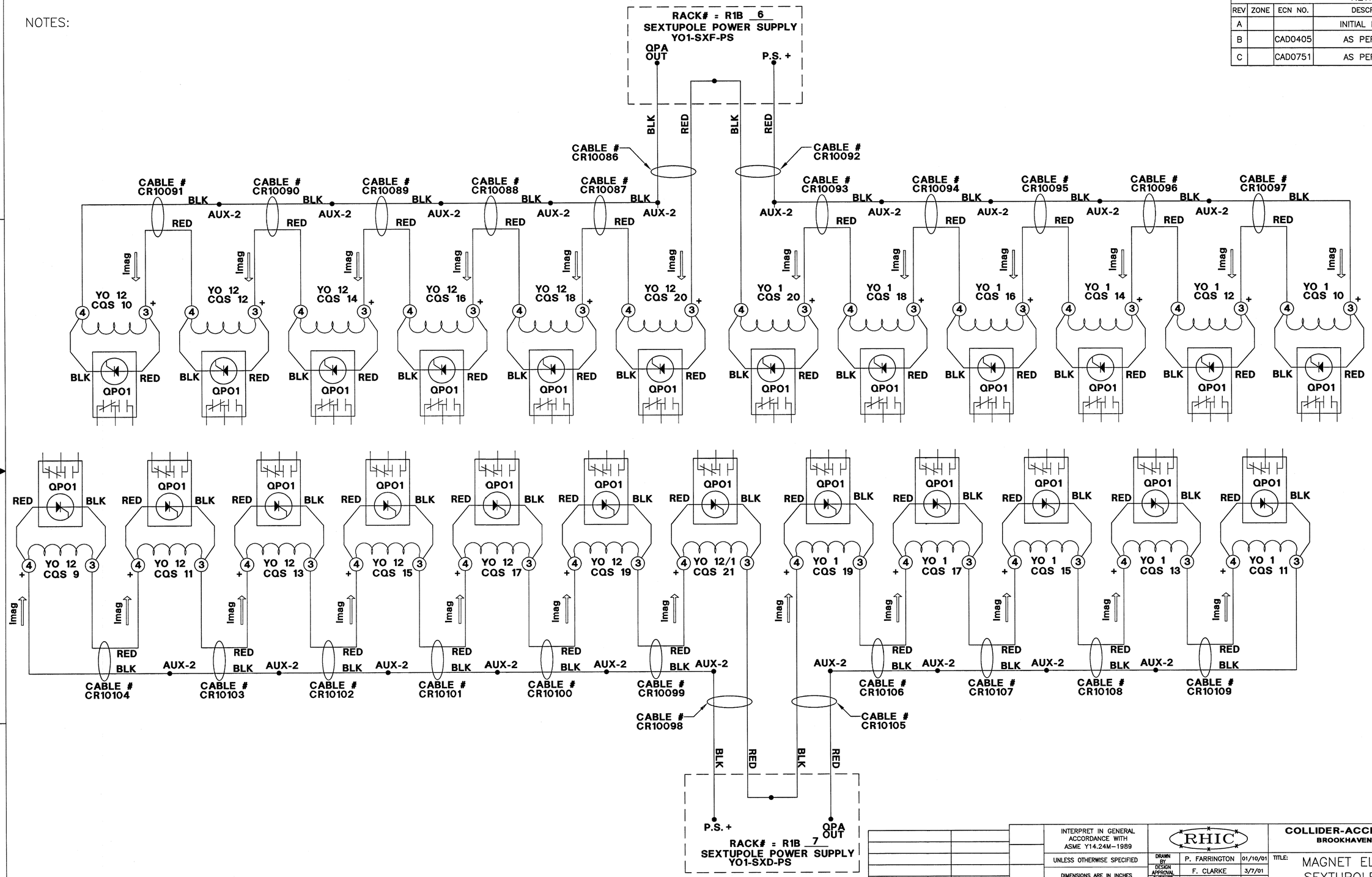

USED ON DRAWING NO.	QTY. PER ASS'Y.	OUTSTANDING ECN	
APPLICATION			

INTERPRET IN GENERAL ACCORDANCE WITH ASME Y14.24M–1989

UNLESS OTHERWISE SPECIFIED

DIMENSIONS ARE IN INCHES
DECIMAL TOLERANCES
.X ± .06
.XX ± .02
.XXX ± .005
ANGULAR TOLERANCE ± 1°

125 FINISH

BREAK SHARP EDGES MAX. .03 MIN. .015

RHIC

DRAWN BY	P. FARRINGTON	01/10/01
DESIGN APPROVAL	F. CLARKE	3/7/01
CHECKED BY	D. BRUNO	4/3/01
ENGINEER APPROVAL	D. BRUNO	4/3/01
SUPERVISOR APPROVAL	J. SANDBERG	4/2/01
Q.A. APPROVAL	D. PASSARELLO	4/17/01
PHYSICIST APPROVAL	S. TEPIKIAN	4/17/01

COLLIDER-ACCELERATOR DEPARTMENT
BROOKHAVEN NATIONAL LABORATORY
UPTON, N.Y. 11973

TITLE: MAGNET ELECTRICAL SYSTEM
SEXTUPOLE POWER SUPPLY
YELLOW OUTER RING SECTOR 12/1

SIZE D | DRAWING NUMBER: 26015064 | REV. C

Q.A. CATEGORY A–3 | SCALE: 1/1 | WEIGHT: NA | SHEET 1 OF 1

DWG NO 26015064 | SHT 1 OF 1 | REV C