NOTES:

REVISIONS							
REV	ZONE	ECN NO.	DESCRIPTION	BY	DATE	CKR	APP
A			INITIAL RELEASE	R.P.	1/02		

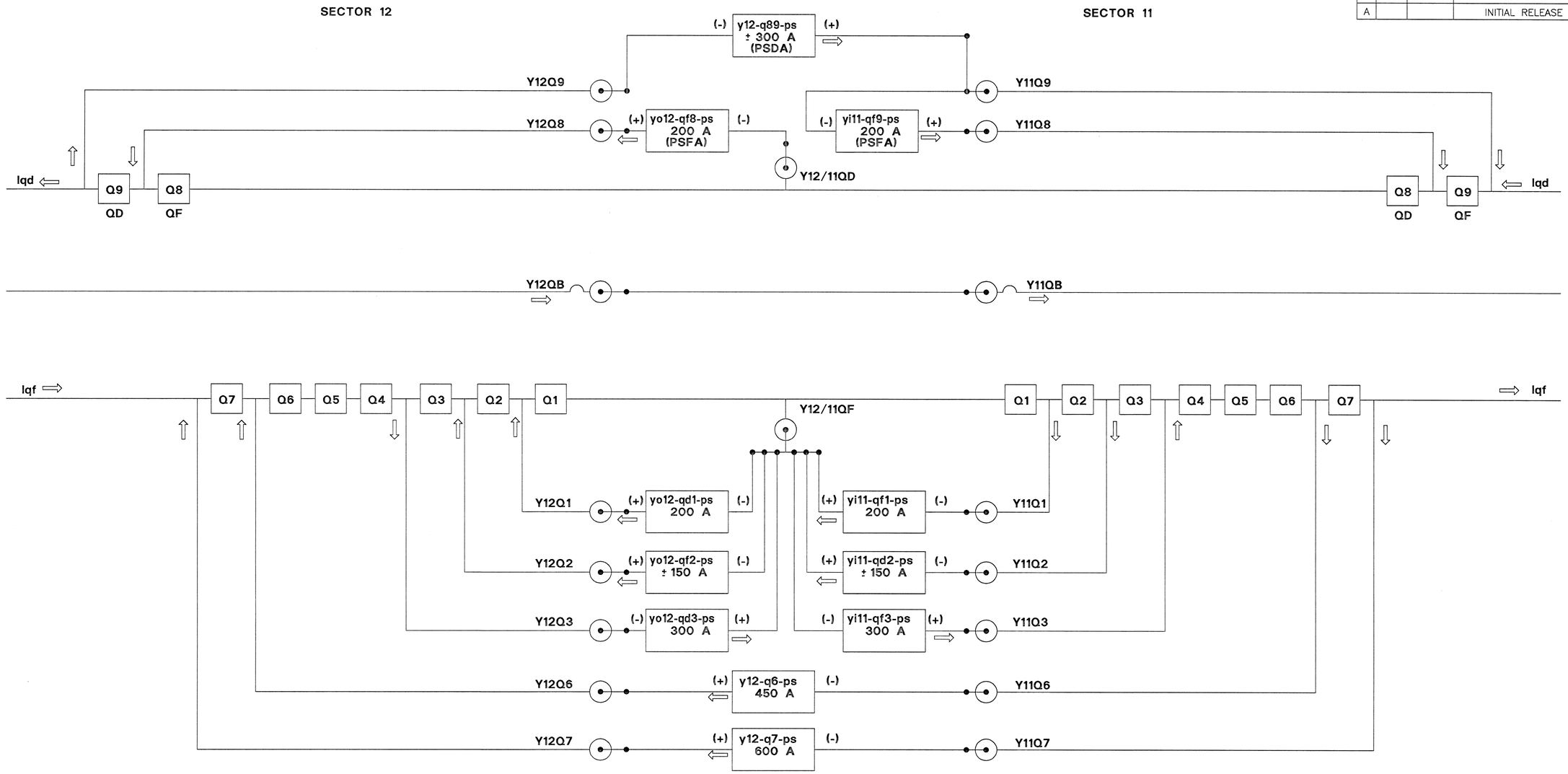

USED ON DRAWING NO.	QTY. PER ASS'Y.
APPLICATION	

OUTSTANDING ECN

INTERPRET IN GENERAL ACCORDANCE WITH ASME Y14.24M–1989

UNLESS OTHERWISE SPECIFIED

DIMENSIONS ARE IN INCHES
DECIMAL TOLERANCES
.X ± .06
.XX ± .02
.XXX ± .005
ANGULAR TOLERANCE ± 1°

125 FINISH

BREAK SHARP EDGES MAX. .03 MIN. .015

RHIC

DRAWN BY	R. PRZYBYLINSKI	5/26/00
DESIGN APPROVAL	J. Clark	1/9/02
CHECKED BY	D. Bruno	1/9/02
ENGINEER APPROVAL	D. Bruno	1/9/02
SUPERVISOR APPROVAL	Y. Sondberg	1/10/02
Q.A. APPROVAL		
PHYSICIST APPROVAL		

COLLIDER-ACCELERATOR DEPARTMENT
BROOKHAVEN NATIONAL LABORATORY
UPTON, N.Y. 11973

TITLE:
MAGNET ELECTRICAL SYSTEM, 12:00 YELLOW QUAD INSERTION POWER SUPPLY CONNECTIONS AT VALVE BOX INTERCONNECTION DIAGRAM

SIZE: D
DRAWING NUMBER: 24060011
REV.: A
Q.A. CATEGORY: A–3
SCALE: 1/1
WEIGHT: NA
SHEET 1 OF 1

DWG NO 24060011 SHT 1 OF 1 REV A