NOTES:

| REVISIONS | | | | | | | |
|---|---|---|---|---|---|---|---|
| REV | ZONE | ECN NO. | DESCRIPTION | BY | DATE | CKR | APP |
| A | | | INITIAL RELEASE | R.P. | 1/02 | | |

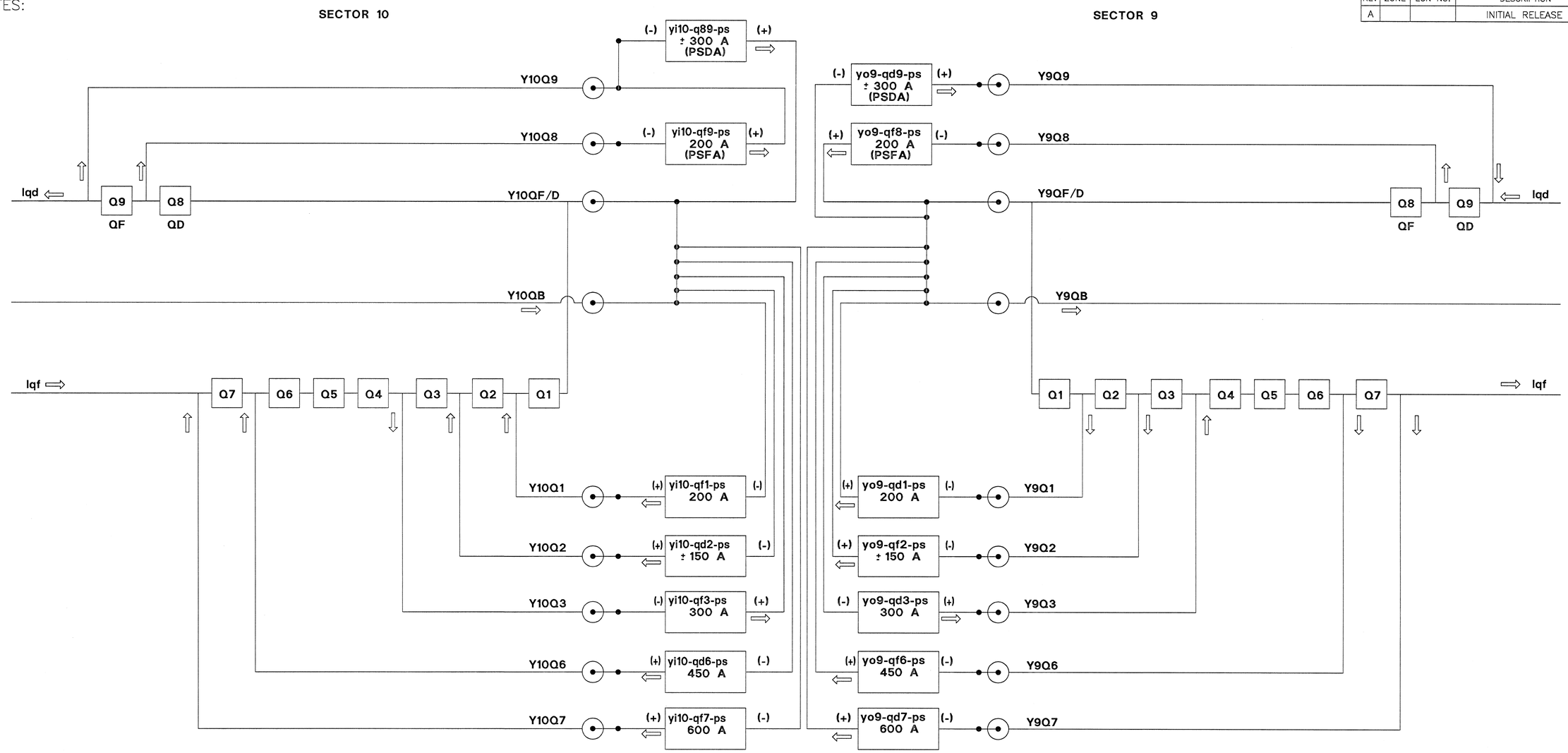


| | | | | | |
|---|---|---|---|---|---|
| USED ON DRAWING NO. | QTY. PER ASS'Y. | OUTSTANDING ECN | INTERPRET IN GENERAL ACCORDANCE WITH ASME Y14.24M–1989 | DRAWN BY | R. PRZYBYLINSKI 5/26/00 |
| APPLICATION | | | UNLESS OTHERWISE SPECIFIED | DESIGN APPROVAL | 1/9/02 |
| | | | DIMENSIONS ARE IN INCHES DECIMAL TOLERANCES .X ± .06 .XX ± .02 .XXX ± .005 ANGULAR TOLERANCE ± 1° | CHECKED BY | 1/9/02 |
| | | | | ENGINEER APPROVAL | 1/9/02 |
| | | | | SUPERVISOR APPROVAL | 1/10/02 |
| | | | | Q.A. APPROVAL | |
| | | | 125 FINISH / BREAK SHARP EDGES MAX. .03 MIN. .015 | PHYSICIST APPROVAL | |

RHIC

**COLLIDER-ACCELERATOR DEPARTMENT**
**BROOKHAVEN NATIONAL LABORATORY**
UPTON, N.Y. 11973

TITLE:
MAGNET ELECTRICAL SYSTEM, 10:00 YELLOW QUAD INSERTION POWER SUPPLY CONNECTIONS AT VALVE BOX INTERCONNECT DIAGRAM

| SIZE | DRAWING NUMBER: | REV. |
|---|---|---|
| D | 24060009 | A |

Q.A. CATEGORY A–3 | SCALE: 1/1 | WEIGHT: NA | SHEET 1 OF 1

DWG NO 24060009 | SHT 1 OF 1 | REV A