NOTES:

| REVISIONS | | | | | | | |
|---|---|---|---|---|---|---|---|
| REV | ZONE | ECN NO. | DESCRIPTION | BY | DATE | CKR | APP |
| A | | | INITIAL RELEASE | R.P. | 1/02 | | |

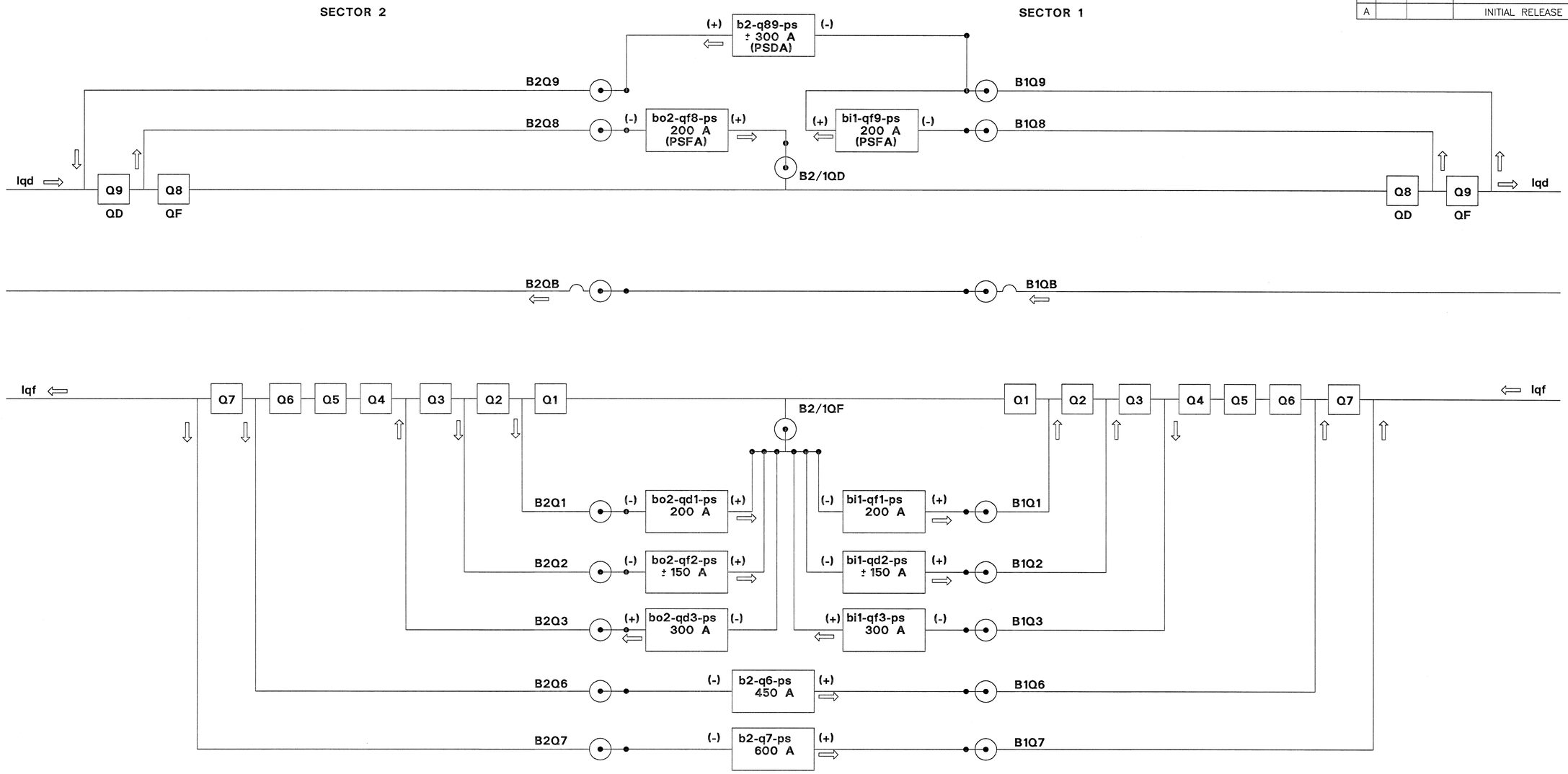


| USED ON DRAWING NO. | QTY. PER ASS'Y. |
|---|---|
| APPLICATION | |

OUTSTANDING ECN

INTERPRET IN GENERAL ACCORDANCE WITH ASME Y14.24M-1989

UNLESS OTHERWISE SPECIFIED

DIMENSIONS ARE IN INCHES
DECIMAL TOLERANCES
.X ± .06
.XX ± .02
.XXX ± .005
ANGULAR TOLERANCE ± 1°

125 FINISH

BREAK SHARP EDGES MAX. .03 MIN. .015

RHIC

| | | |
|---|---|---|
| DRAWN BY | R. PRZYBYLINSKI | 5/26/00 |
| DESIGN APPROVAL | J. Clarke | 1/9/02 |
| CHECKED BY | J. Brown | 1/9/02 |
| ENGINEER APPROVAL | D. Bar | 1/9/02 |
| SUPERVISOR APPROVAL | J. Sandberg | 1/10/02 |
| Q.A. APPROVAL | | |
| PHYSICIST APPROVAL | | |

**COLLIDER-ACCELERATOR DEPARTMENT**
**BROOKHAVEN NATIONAL LABORATORY**
UPTON, N.Y. 11973

TITLE:
MAGNET ELECTRICAL SYSTEM, 2:00 BLUE QUAD INSERTION POWER SUPPLY CONNECTIONS AT VALVE BOX INTERCONNECTION DIAGRAM

| SIZE | DRAWING NUMBER: | REV. |
|---|---|---|
| D | 24060000 | A |

Q.A. CATEGORY A-3 | SCALE: 1/1 | WEIGHT: NA | SHEET 1 OF 1

DWG NO 24060000 | SHT 1 OF 1 | REV A