NOTES:
1. THIS DRAWING TO BE USED IN CONJUNCTION WITH PARTS LIST LOCATED ON APPROPRIATE ASSEMBLY DRAWING, REFER TO ASSEMBLY DRAWING LOCATED IN USED ON BLOCK FOR PARTS LIST WHICH DEPICTS VALUES AND REFERENCE DESIGNATIONS OF COMPONENTS THAT VARY WITH DASH NO.
2. UNLESS OTHERWISE SPECIFIED:
   RESISTOR VALUES ARE GIVEN IN OHMS
   CAPACITOR VALUES ARE GIVEN IN MICROFARADS
3. LAST REFERENCE DESIGNATION USED C6,DS10,J1,R15 AND TB5.

REVISIONS							
REV	ZONE	ECN NO.	DESCRIPTION	BY	DATE	CKR	APP
A			INITIAL RELEASE	TT	7/03	WC	UL

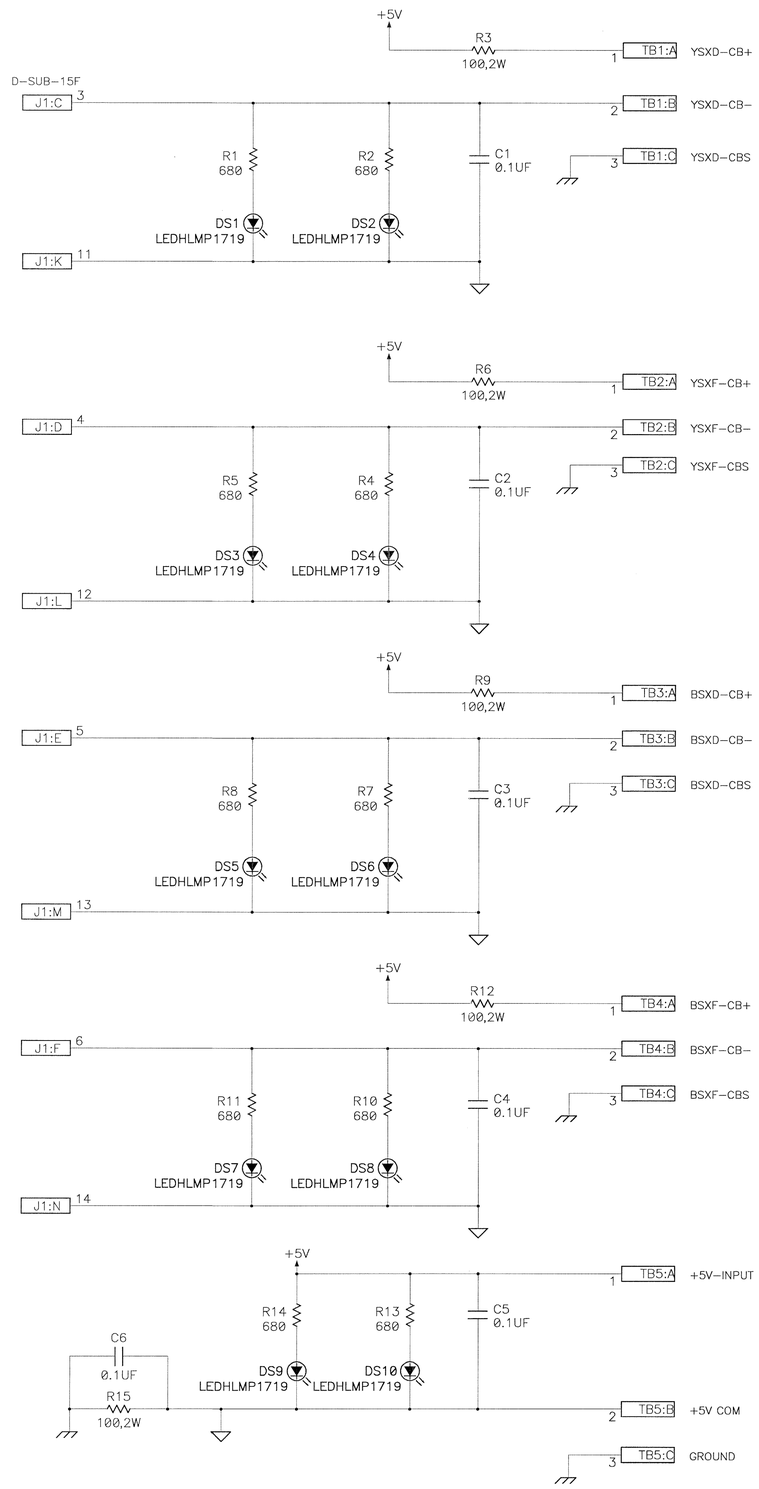

23045020		
USED ON DRAWING NO.	QUANTITY PER ASS'Y	
APPLICATION		OUTSTANDING ECN

INTERPRET IN GENERAL ACCORDANCE WITH ASME Y14.24M-1989

UNLESS OTHERWISE SPECIFIED

DIMENSIONS ARE IN INCHES
DECIMAL TOLERANCES
.X ±.06
.XX ±.02
.XXX ±.005
ANGULAR TOLERANCE ±1°

RHIC

DRAWN BY	TONY TANZA	7/7/03
DESIGN APPROVAL	J. Oberle	8/11/03
CHECKED BY	W. Louie	8/14/03
ENGINEER APPROVAL	W. Louie	8/12/03
SUPERVISOR APPROVAL	J. Sandberg	8/13/03

COLLIDER-ACCELERATOR DEPARTMENT
BROOKHAVEN NATIONAL LABORATORY
UPTON, N.Y. 11973

TITLE:
RHIC
SCHEMATIC DIAGRAM
SEXTUPOLE CROWBAR
STATUS MONITOR

SIZE: D
DRAWING NUMBER: 23045018
REV. A

Q.A. CATEGORY: A-3 | SCALE: 1:1 | WEIGHT: - | SHEET 1 OF 1

PCAD2000