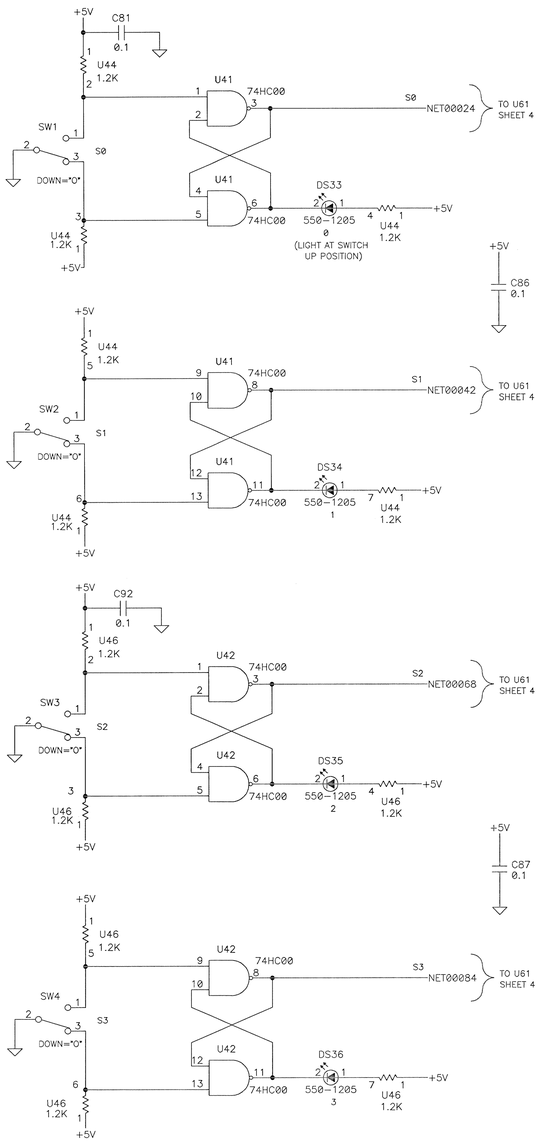

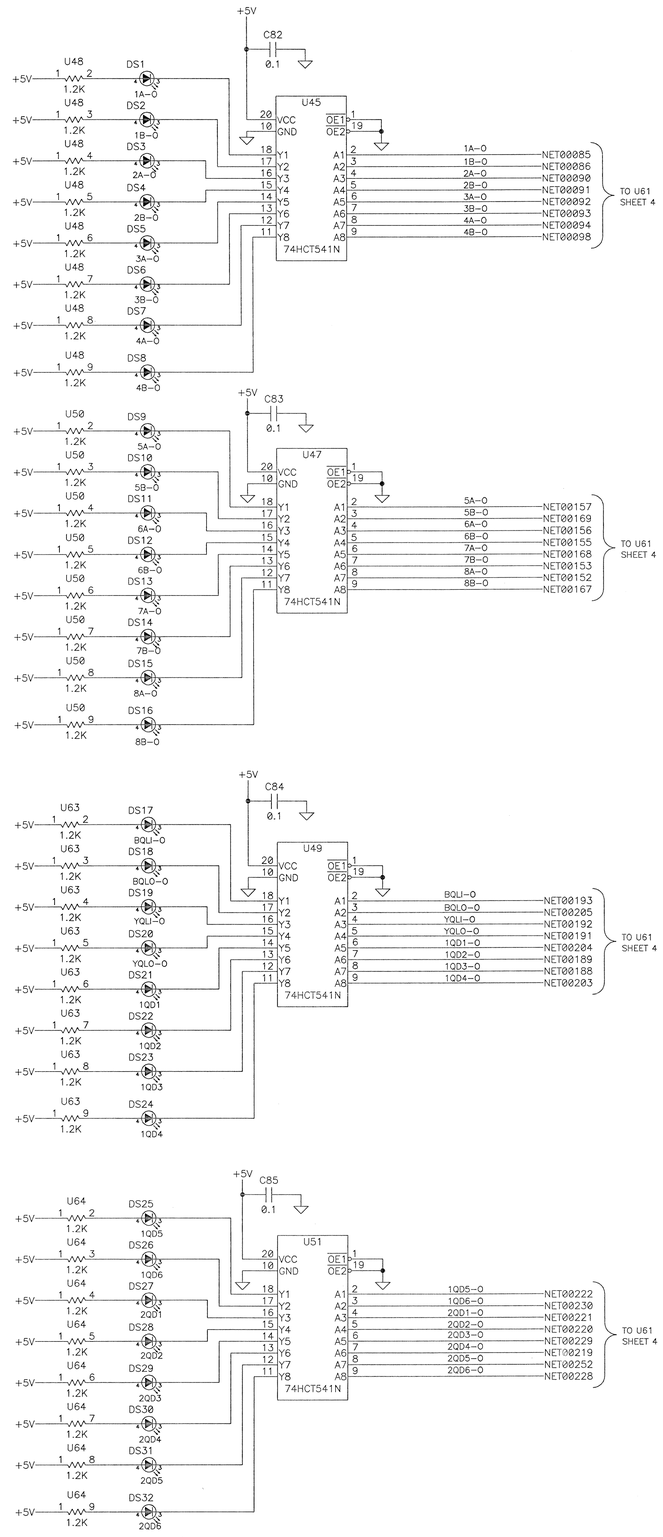

COLLIDER-ACCELERATOR DEPARTMENT BROOKHAVEN NATIONAL LABORATORY UPTON, N.Y. 11973	SIZE E	DRAWING NUMBER: 23045012	REV. B
	Q.A. CATEGORY A-3	SCALE: 1:1	WEIGHT: -	SHEET 3 OF 4

DWG NO 23045012 SHT 3 OF 4 B