DWG NO	SHT	OF	REV
21030187	1	1	A

NOTES:

REVISIONS							
REV	ZONE	ECN NO.	DESCRIPTION	BY	DATE	CKR	APP
A			INITIAL RELEASE	PF	4/27		

BLUE VALVE BOX

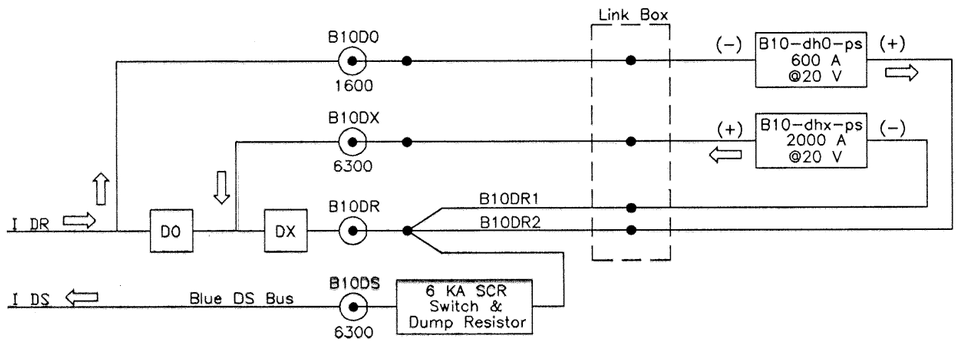

SECTOR 10

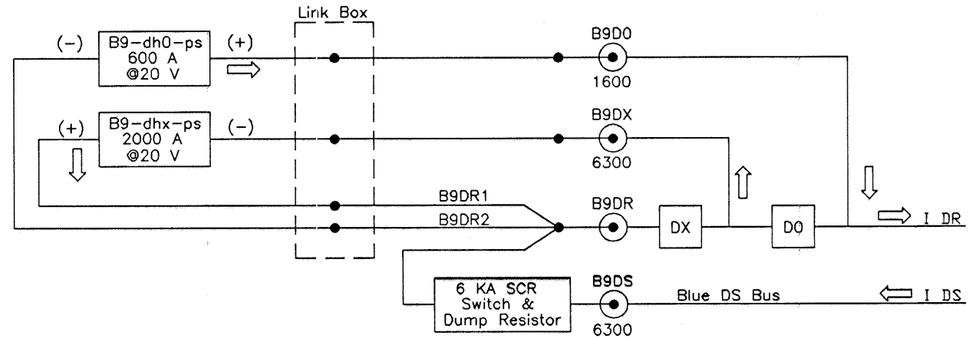

SECTOR 9

YELLOW VALVE BOX

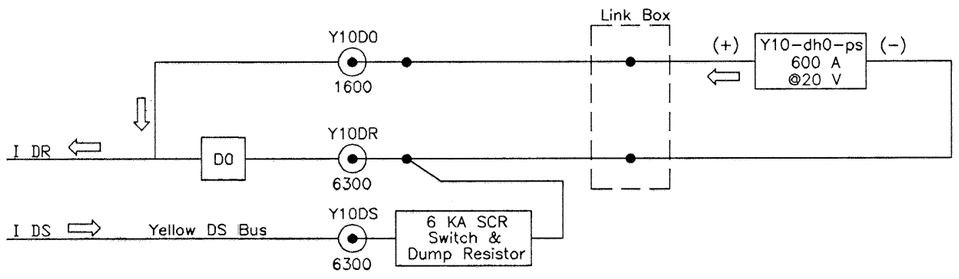

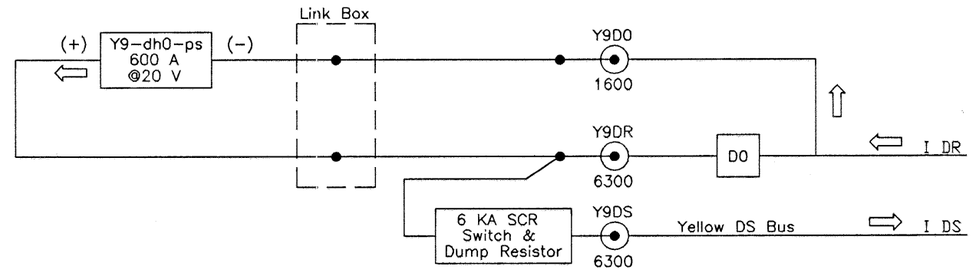

USED ON DRAWING NO.	QTY. PER ASS'Y.	OUTSTANDING ECN
APPLICATION		

INTERPRET IN GENERAL ACCORDANCE WITH ASME Y14.24M-1989

UNLESS OTHERWISE SPECIFIED

DIMENSIONS ARE IN INCHES
DECIMAL TOLERANCES
.X ± .06
.XX ± .02
.XXX ± .005
ANGULAR TOLERANCE ± 1°

125 ✓ FINISH

BREAK SHARP EDGES
MAX. .03 MIN. .015

RHIC

DRAWN BY	P. FARRINGTON	11/30/00
DESIGN APPROVAL	F. Clarke	3/7/01
CHECKED BY	D. Bruno	4/15/01
ENGINEER APPROVAL	D. Bruno	4/15/01
SUPERVISOR APPROVAL	J. Sandberg	4/27/01
PHYSICIST APPROVAL	[illegible]	4/23/01

COLLIDER-ACCELERATOR DEPARTMENT
BROOKHAVEN NATIONAL LABORATORY
UPTON, N.Y. 11973

TITLE: RHIC, 10:00 BLUE AND YELLOW DR, DS, DO, DX POWER SUPPLY CONNECTIONS AT VALVE BOX

SIZE	DRAWING NUMBER:	REV.
B	21030187	A

Q.A. CATEGORY	SCALE:	WEIGHT:	SHEET
A-3	1/2	NA	1 OF 1

AUTOCAD 2000