DWG NO	SHT	OF	REV
21030184	1	1	A

NOTES:

REVISIONS							
REV	ZONE	ECN NO.	DESCRIPTION	BY	DATE	CKR	APP
A			INITIAL RELEASE	PF	4/27		

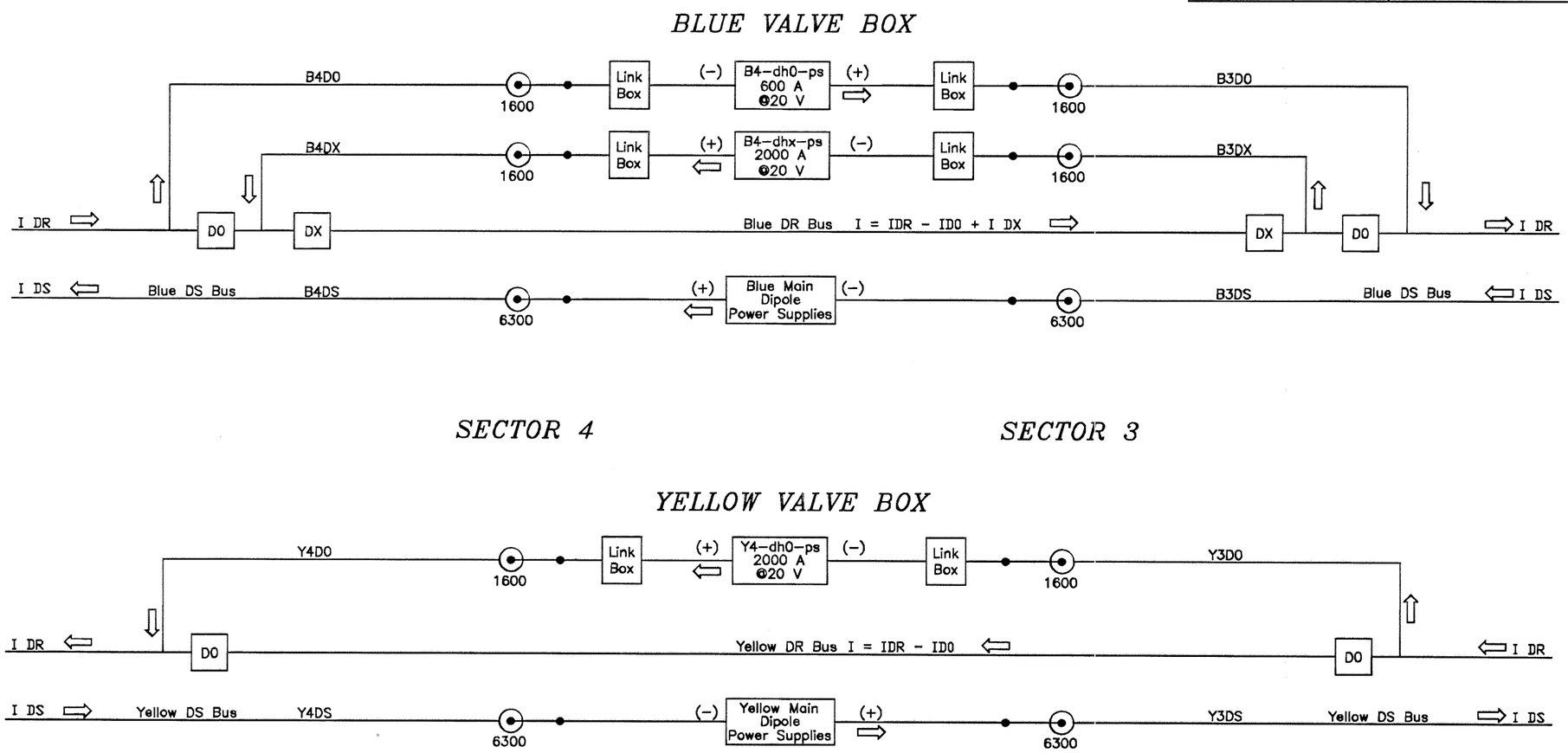

USED ON DRAWING NO.	QTY. PER ASS'Y.
APPLICATION	

OUTSTANDING ECN

INTERPRET IN GENERAL ACCORDANCE WITH ASME Y14.24M−1989

UNLESS OTHERWISE SPECIFIED

DIMENSIONS ARE IN INCHES
DECIMAL TOLERANCES
.X ± .06
.XX ± .02
.XXX ± .005
ANGULAR TOLERANCE ± 1°

125 FINISH

BREAK SHARP EDGES
MAX. .03 MIN. .015

RHIC

DRAWN BY	P. FARRINGTON	11/30/00
DESIGN APPROVAL	F. Clarke	4/27/01
CHECKED BY	D. Bruno	4/27/01
ENGINEER APPROVAL	D. Bruno	4/27/01
SUPERVISOR APPROVAL	Jon Sandberg	4/30/01
PHYSICIST APPROVAL	[illegible]	4/27/01

COLLIDER-ACCELERATOR DEPARTMENT
BROOKHAVEN NATIONAL LABORATORY
UPTON, N.Y. 11973

TITLE: RHIC, 4:00 BLUE AND YELLOW DS, DO AND DX POWER SUPPLY CONNECTIONS AT VALVE BOX

SIZE	DRAWING NUMBER:	REV.
B	21030184	A

Q.A. CATEGORY	SCALE:	WEIGHT:	SHEET
A−3	1/2	NA	1 OF 1

AUTOCAD 2000