Polarized source upgrade for the 2005 run.

A. Zelenski.

- OPPIS performance in 2004 run.
- Status of upgrade.

C-AD Machine Advisory Committee
Meeting, November 2004, BNL

Requirements to the polarized source.

- High intensity ~ $5 \cdot 10^{11}$ H^-/pulse at 200 MeV after the Linac. At present AGS and RHIC beam intensity acceptances are limited by about $1 \cdot 10^{11}$ protons/bunch. The intensity excess was used to reduce transversal and longitudinal beam emittances by a strong dynamical collimation in the Booster .
- Highest possible polarization is required to reduce a systematical and statistical errors in polarization experiments. Double spin asymmetry statistical error is proportional to ~$1/P^4$, therefore a 5% polarization increase in the source is effectively equivalent to 30% increase in the data taking time.
- Beam intensity and polarization must be equal at spin-reversal and from pulse to pulse.

  $\Delta I/I < 10^{-3}$ and $\Delta P/P < 1\%$ were measured in the RHIC OPPIS.

RHIC POLARIZED H^- ION SOURCE.

Polarized source for RHIC was developed in collaboration: BNL – KEK – TRIUMF – INR, Moscow(1998-2000).

- Source intensity $12 \cdot 10^{11}$ H^-/pulse.
- Pulse duration 300-500 us, repetition rate up to 7 Hz .
- 85% polarization was obtained with the TRIUMF solenoid.
- 80-82% with KEK solenoid.

Polarized H- ion beam intensity in the RHIC injector.

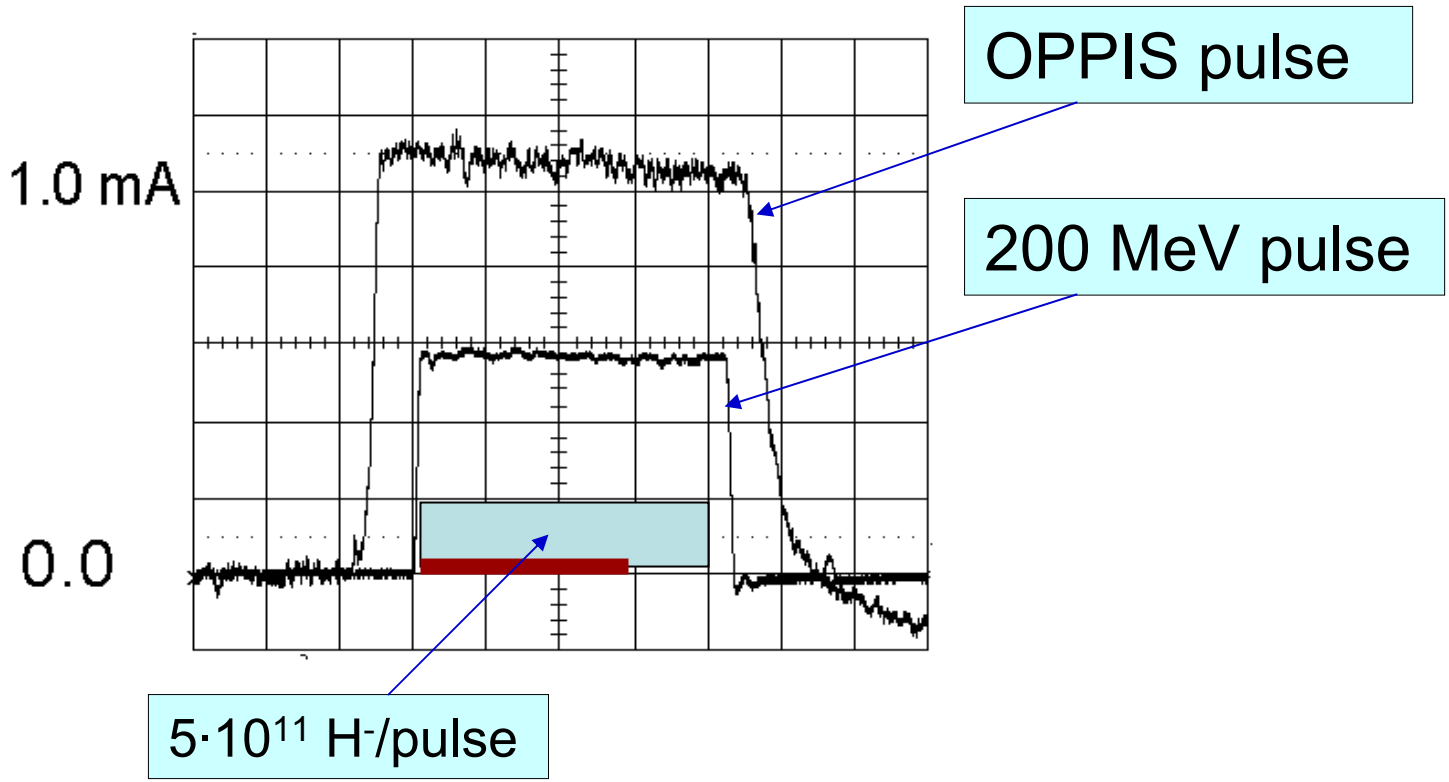

- Polarized beam pulses. Top trace- OPPIS pulse; bottom trace – beam pulse at 200 MeV linac output. Time scale– 100 us/div.

SPIN-EXCHANGE POLARIZATION IN PROTON-Rb COLLISIONS.

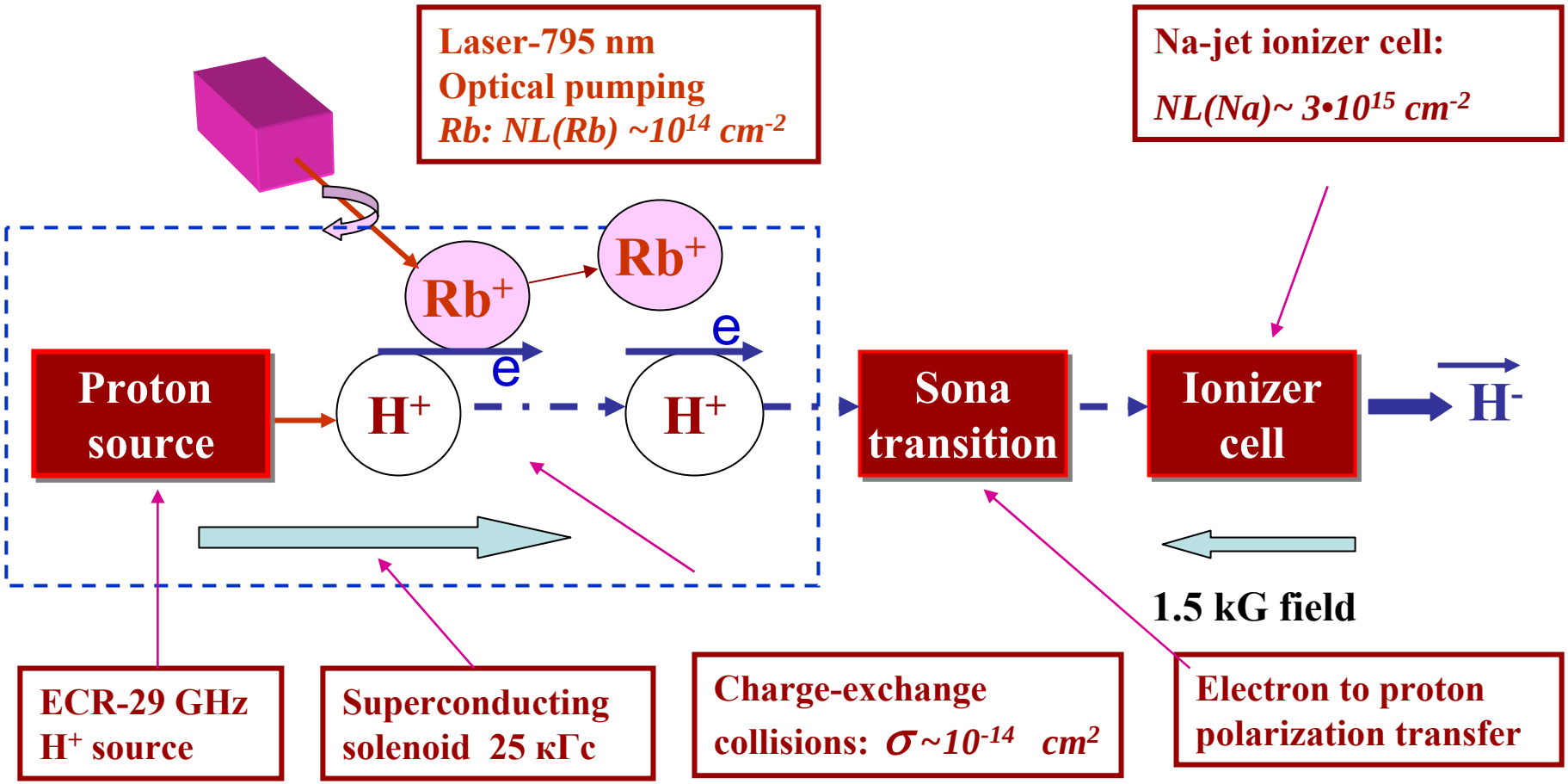

Laser beam is a primary source of angular momentum:

10 W (795 nm) ⇨ $4 \cdot 10^{19}$ h ν /sec ⇨ 2 A, $\vec{H}^0$ equivalent intensity.

SCHEMATIC LAYOUT OF THE RHIC OPPIS.

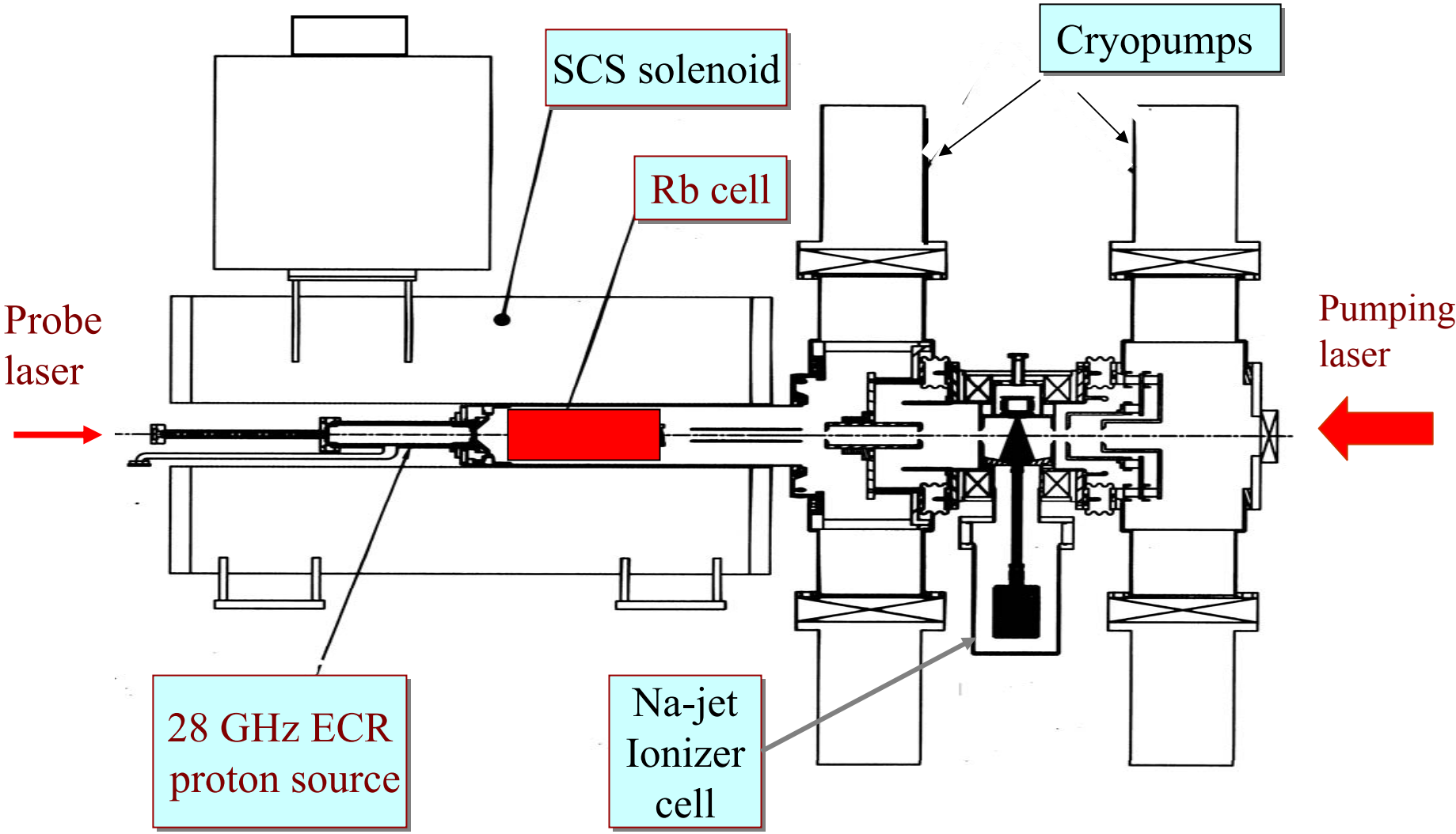

ECR primary proton source.

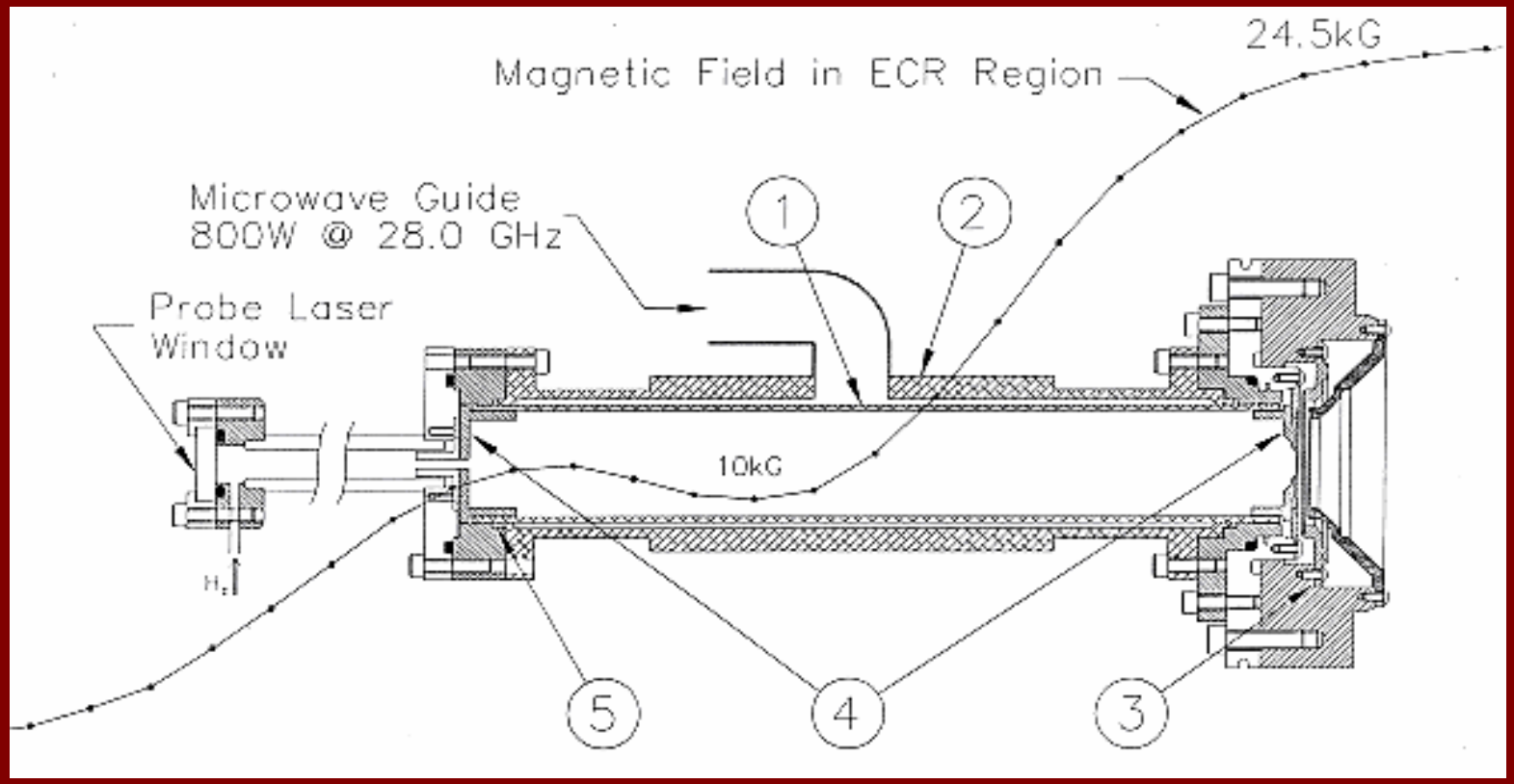

- **1-quartz liner Ø40 мм; 2- ECR-cavity; 3-three-grid multihole proton extraction system; 4- boron-nitride cups; 5-”Kalrez” O-rings. Longitudinal magnetic field distribution for optimal OPPIS operation.**

Sodium-jet ionizer cell.

Transversal vapor flow in the N-jet cell. Reduces sodium vapor losses for 3-4 orders of magnitude, which allow the cell aperture increase up to 3.0 cm .

- **Reservoir– operational temperature.**
- **Tres. ~500 ^{o}C.**
- **Nozzle– Tn ~500 ^{o}C.**
- **Collector- Na-vapor condensation: Tcoll.~120°C**
- **Trap- return line. T ~ 120 – 180 ^{o}C.**

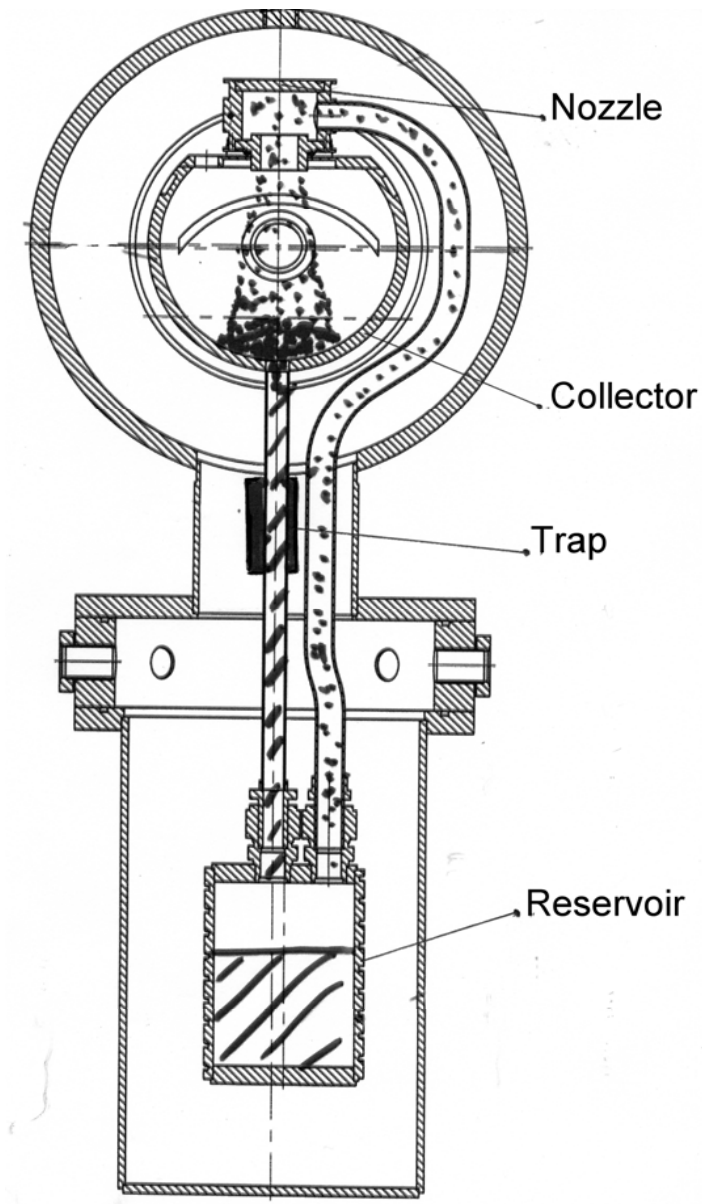

Na-jet ionizer 3-D view.

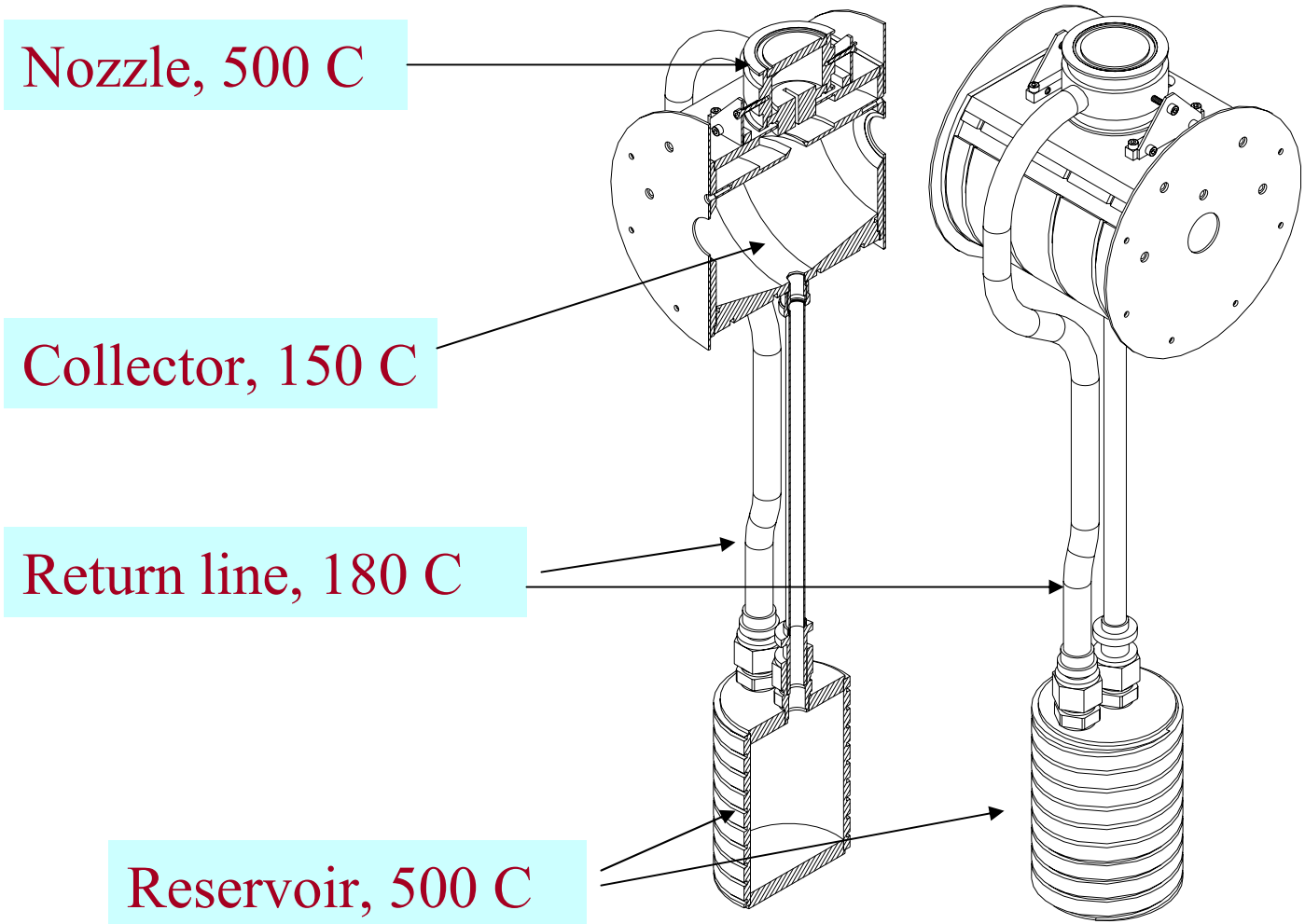

H^- beam acceleration to 35 keV at the exit of Na-jet ionizer cell.

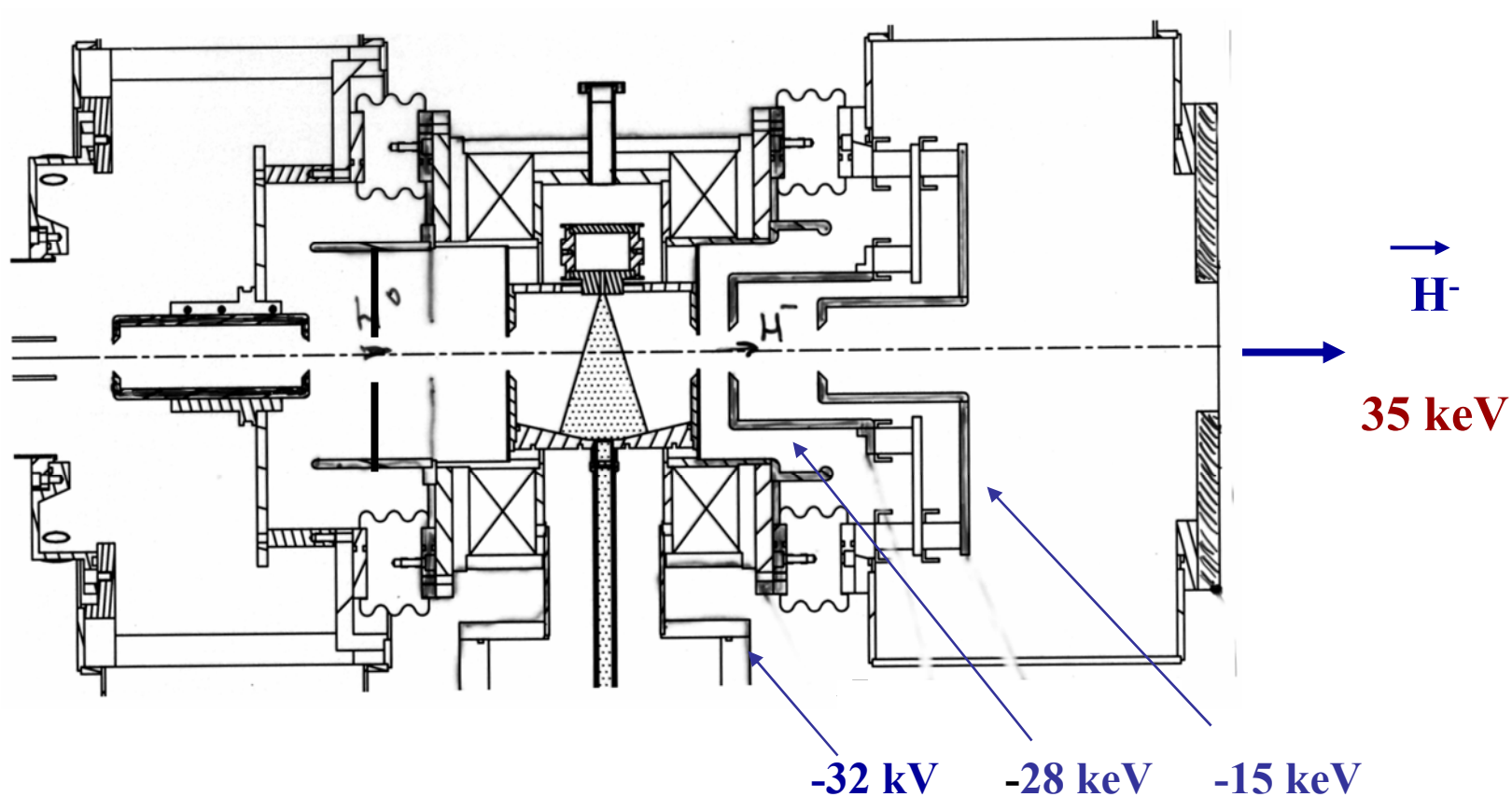

Na-jet cell is isolated and biased to – 32 keV. The H^- beam is accelerated in a two-stage acceleration system.

POLARIZED INJECTOR LAYOUT .

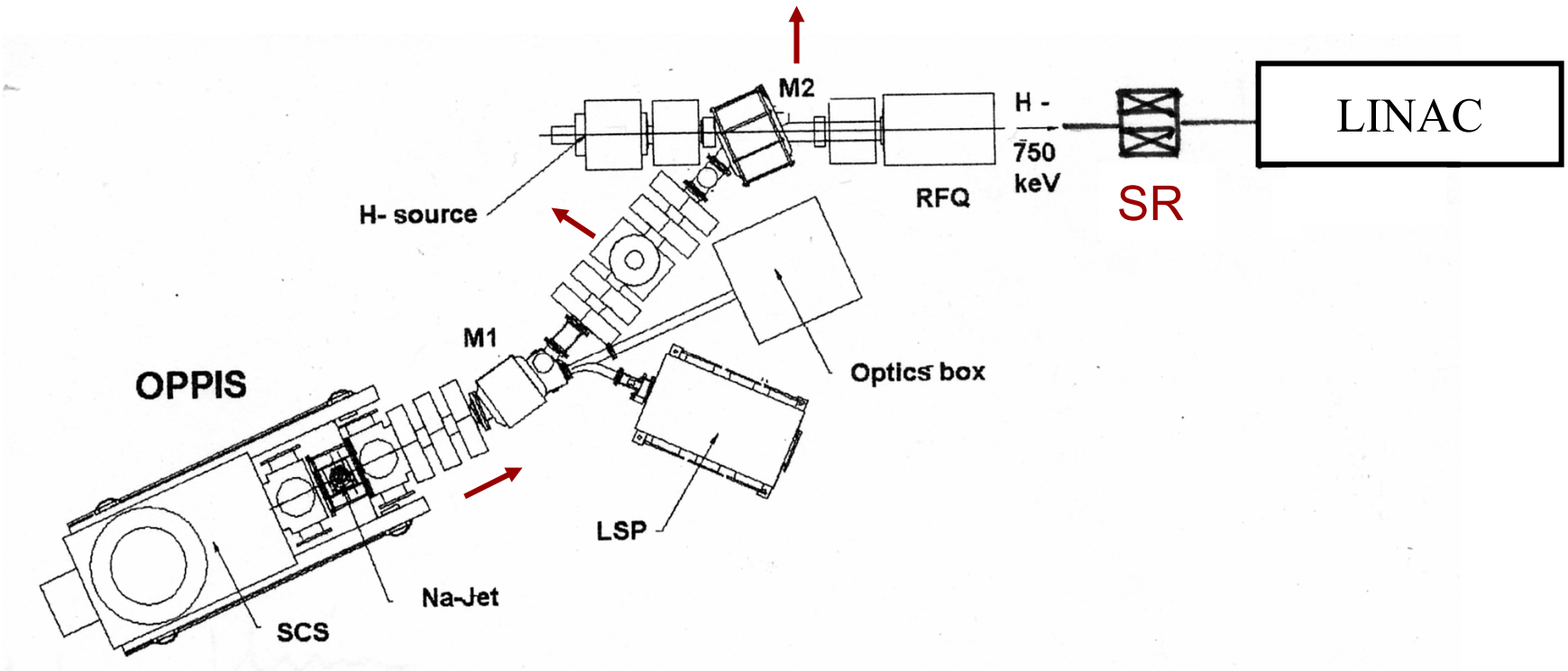

OPPIS–optically-pumped polarized H- ion source; M_1M_2- bending magnets; LSP -Lamb-shift polarimeter; SR –spin-rotator.

Polarized injector, 200 MeV linac and injection lines.

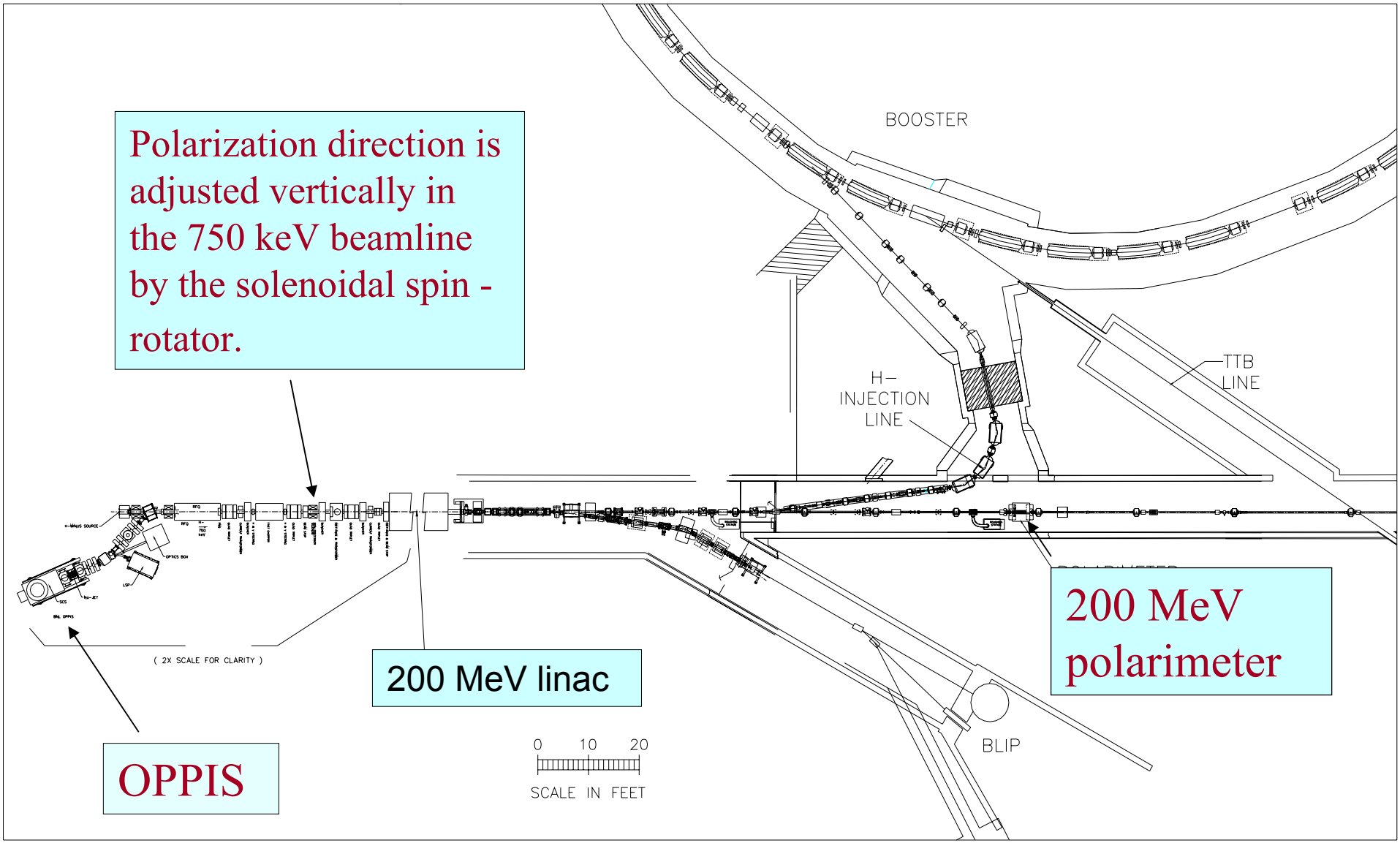

200 MeV p-Carbon and p-D polarimeter.

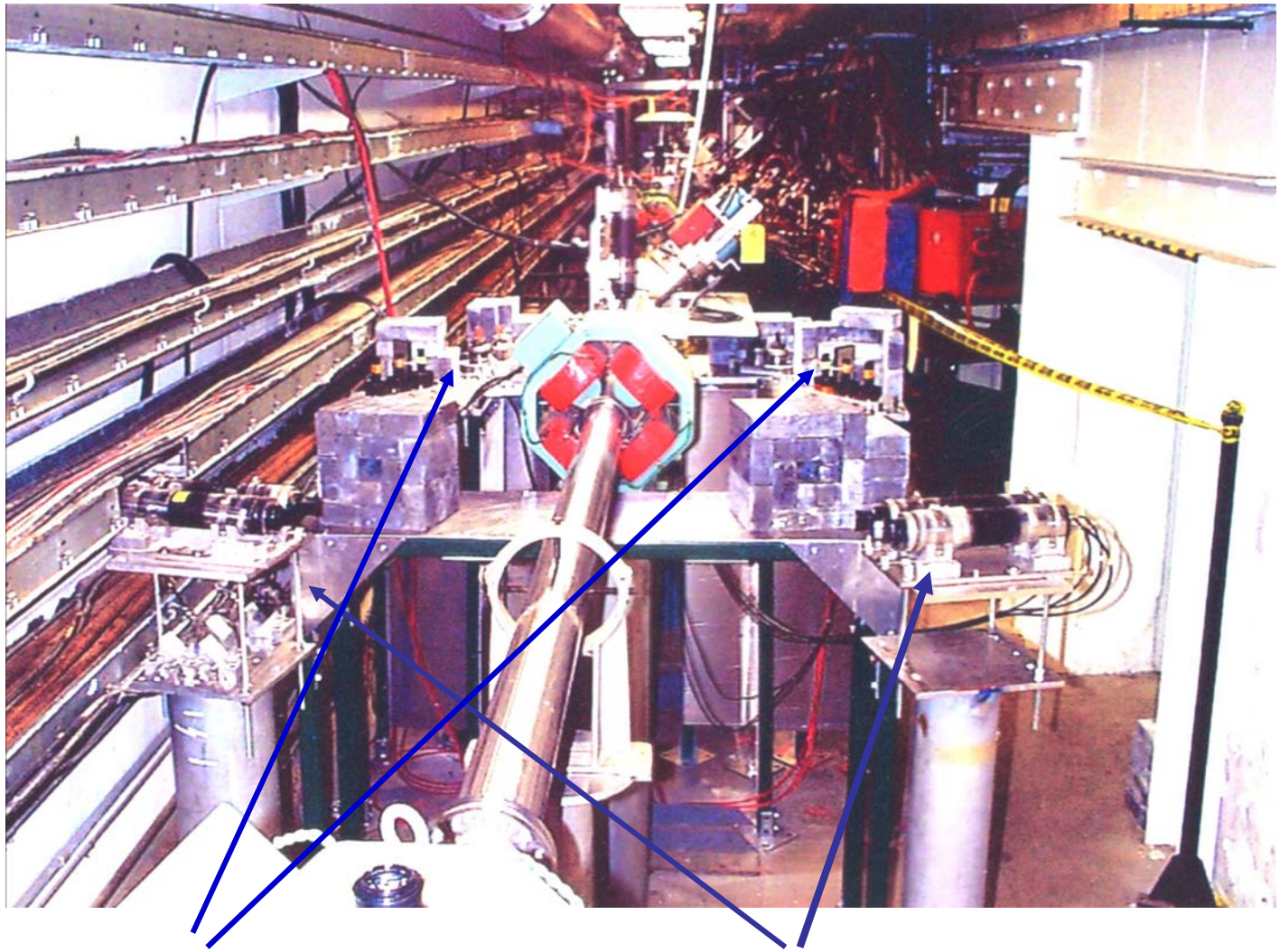

D-recoil arms

12 deg proton arms.

Spin-rotator tune.

- OPPIS produces longitudinally polarized H^- beam.
- M1, M2- 23° и 47° –bending magnets rotate polarization to transverse direction.
- Focusing solenoid rotate polarization direction ~420°
- Spin-rotator solenoid in 750 keV MEBT line aligns polarization to vertical direction.

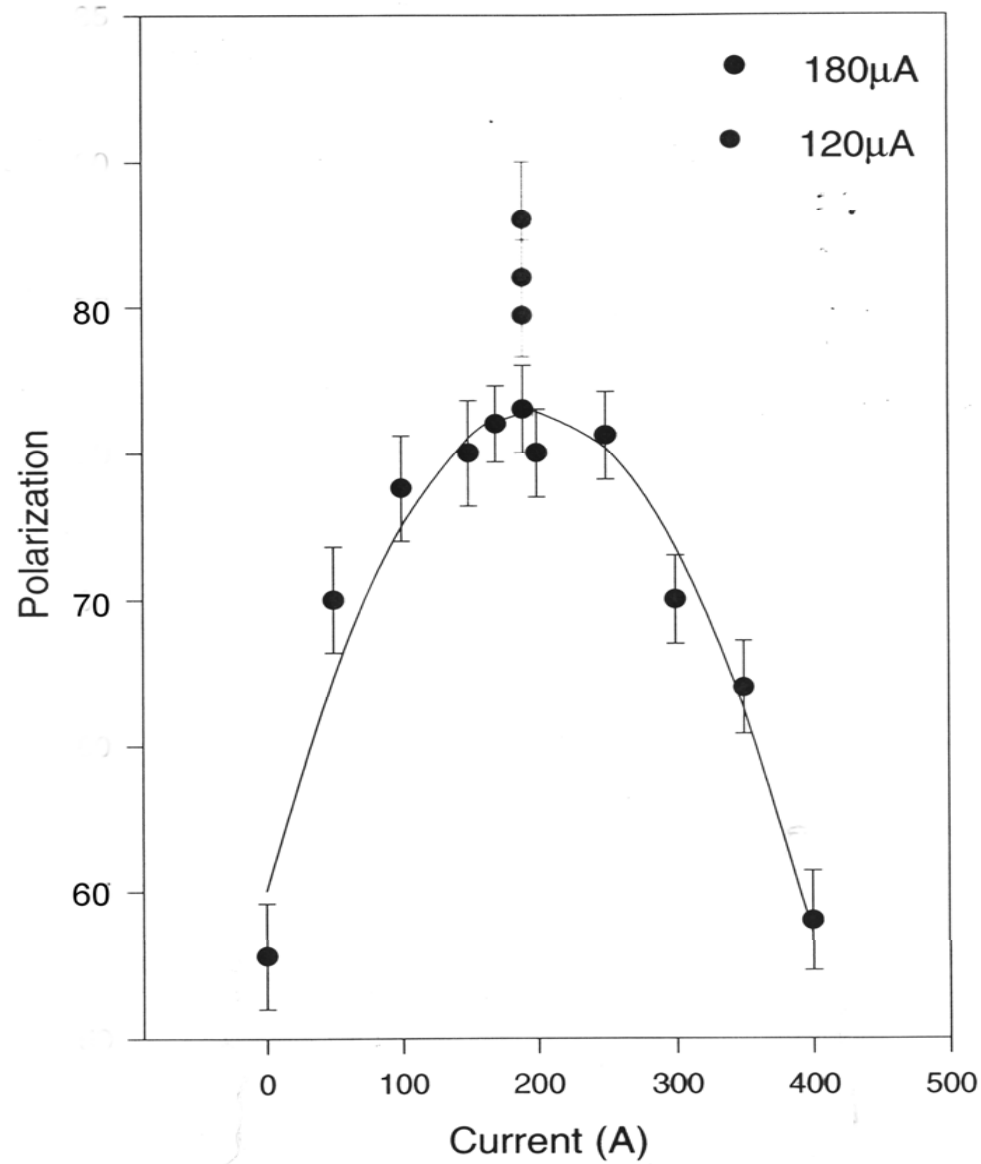

200 MeV polarization measurements.

Sequential measurements.

80%

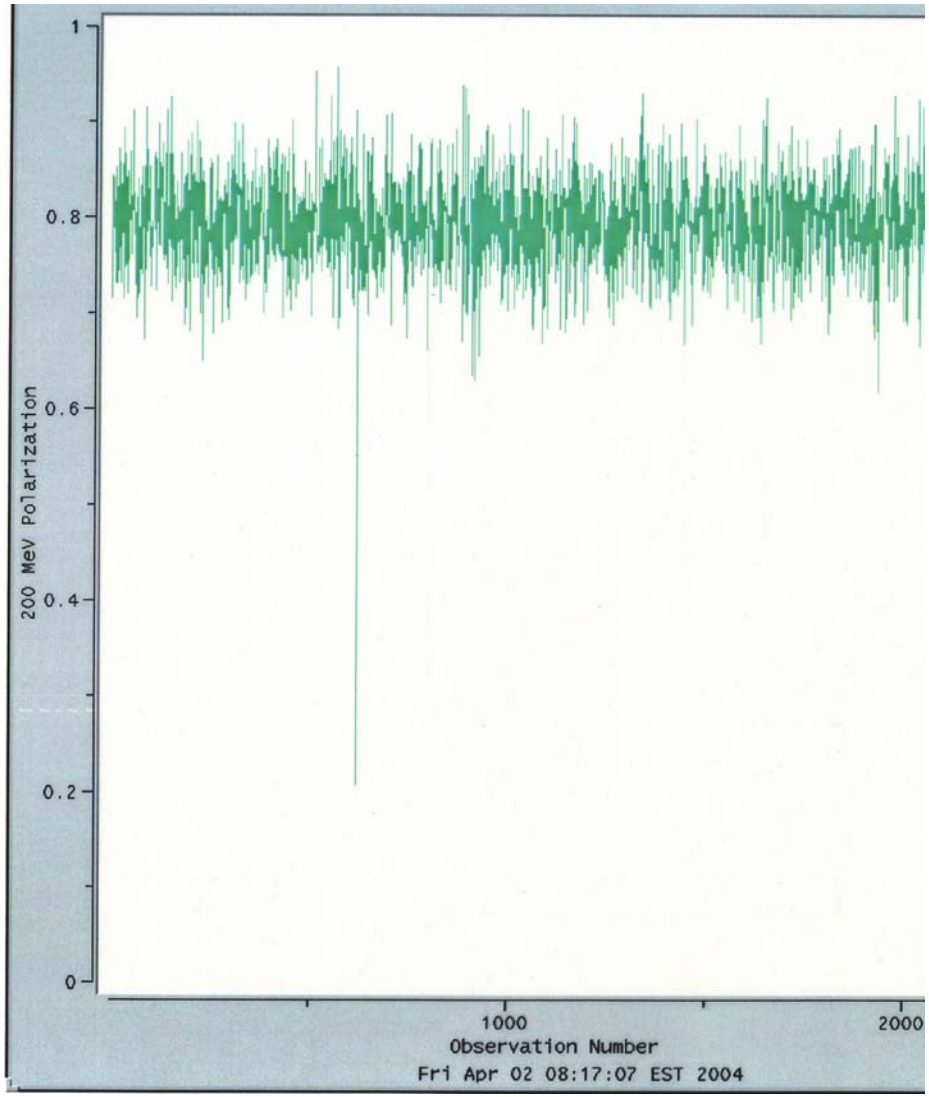

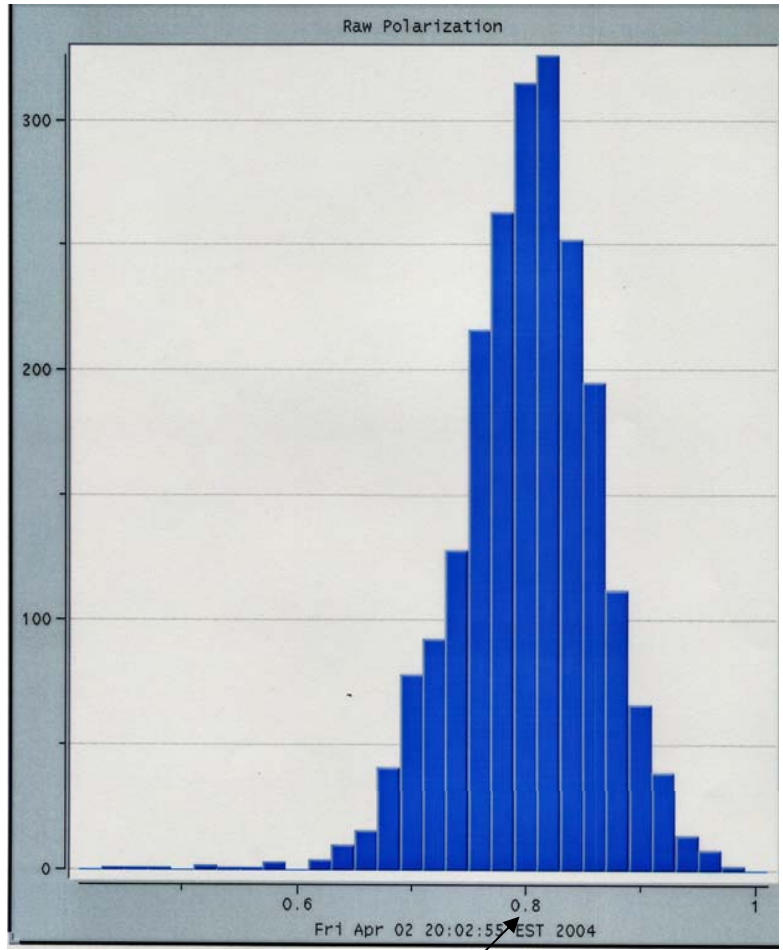

82%

Polarization histogram, maximum at 82%.

Polarization measurements at 300 keV at TRIUMF..

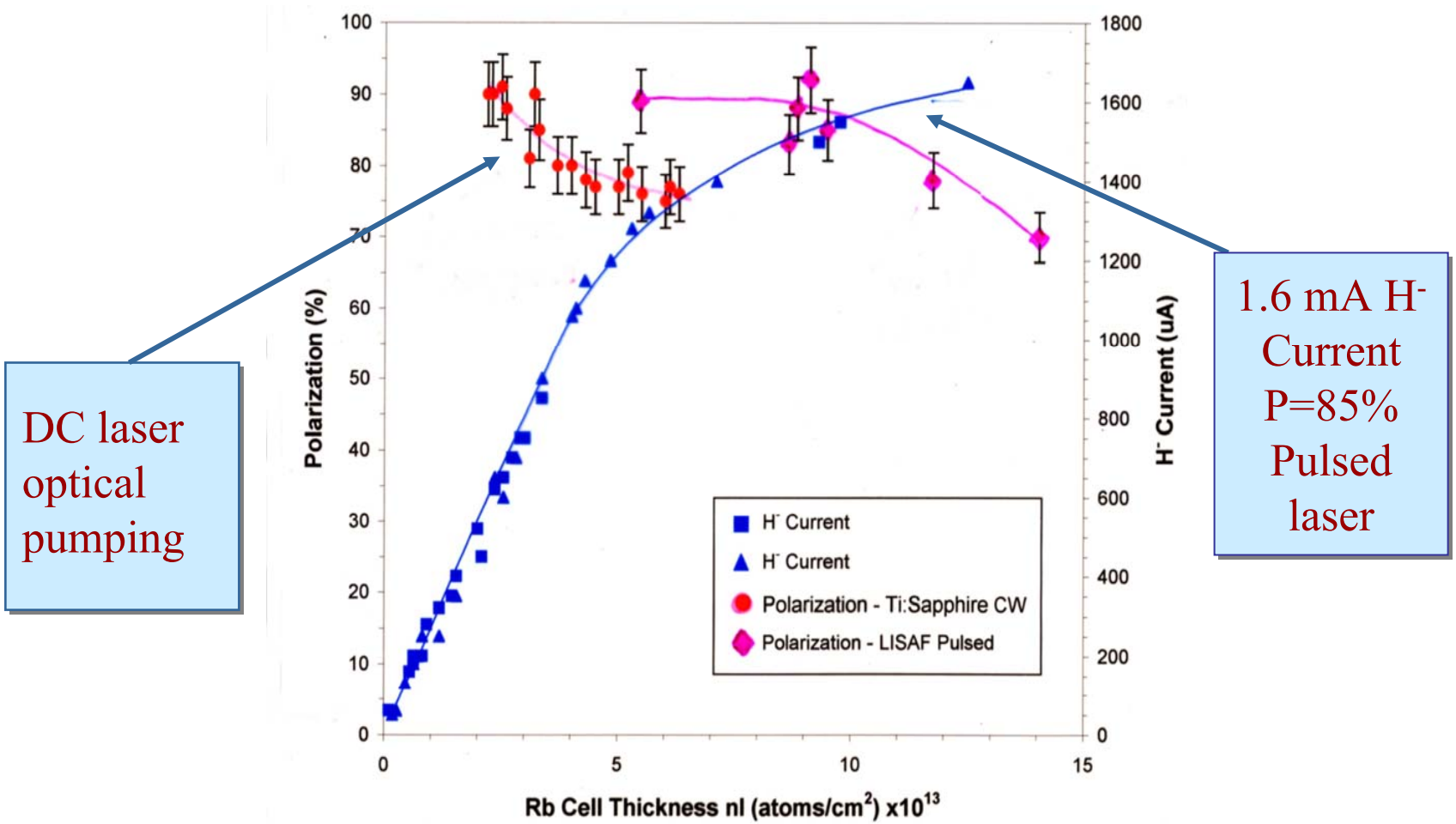

H^- ion beam current and polarization vs. optically-pumped Rb vapor thickness.

The Oxford Instr. superconducting solenoid at the TRIUMF OPPIS.

- The solenoid has the cold yoke (lower transverse field).
- The field is more homogeneous and better confined.
- The solenoid had been shipped to BNL and will be installed for the 2005 run.

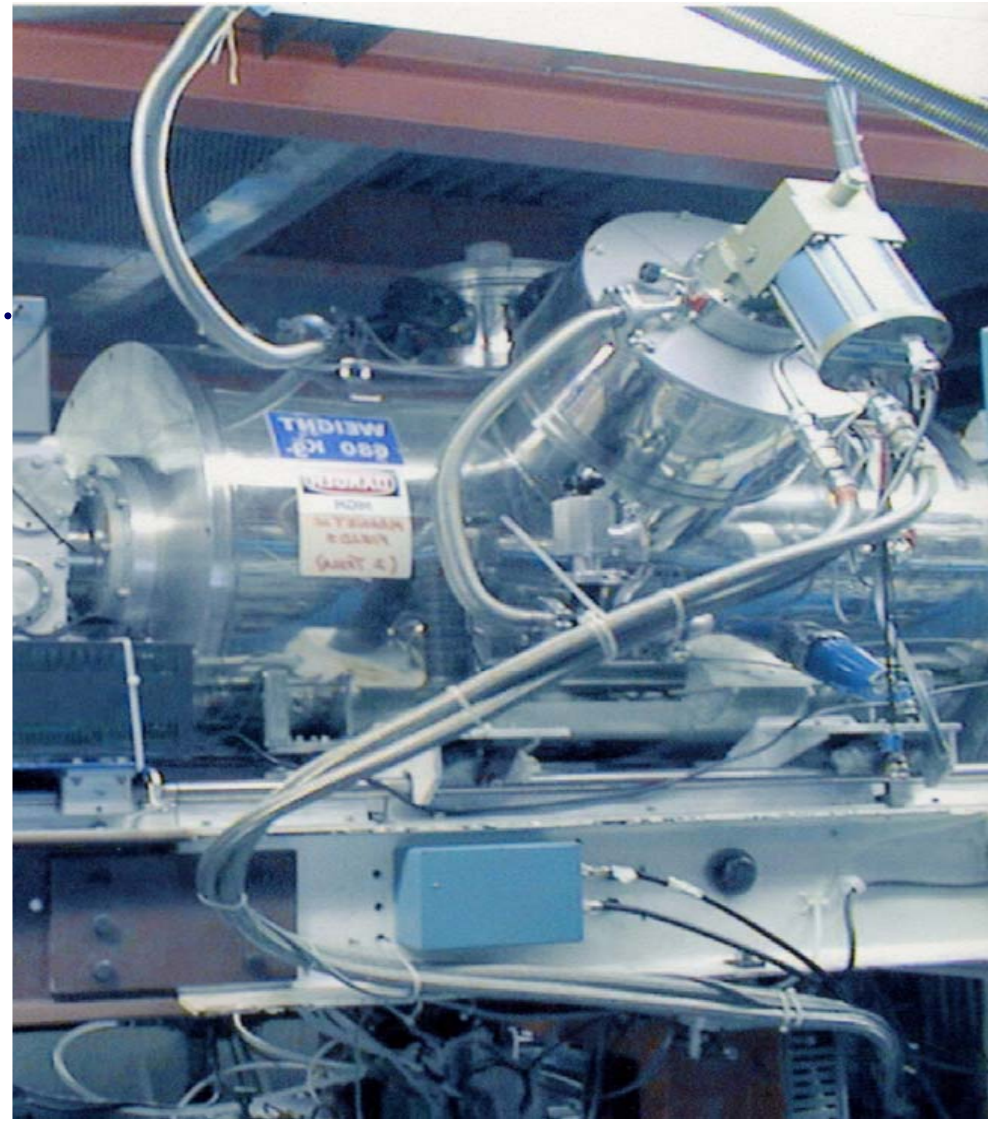

Magnetic field maps for Oxford Instr. and Toshiba solenoids.

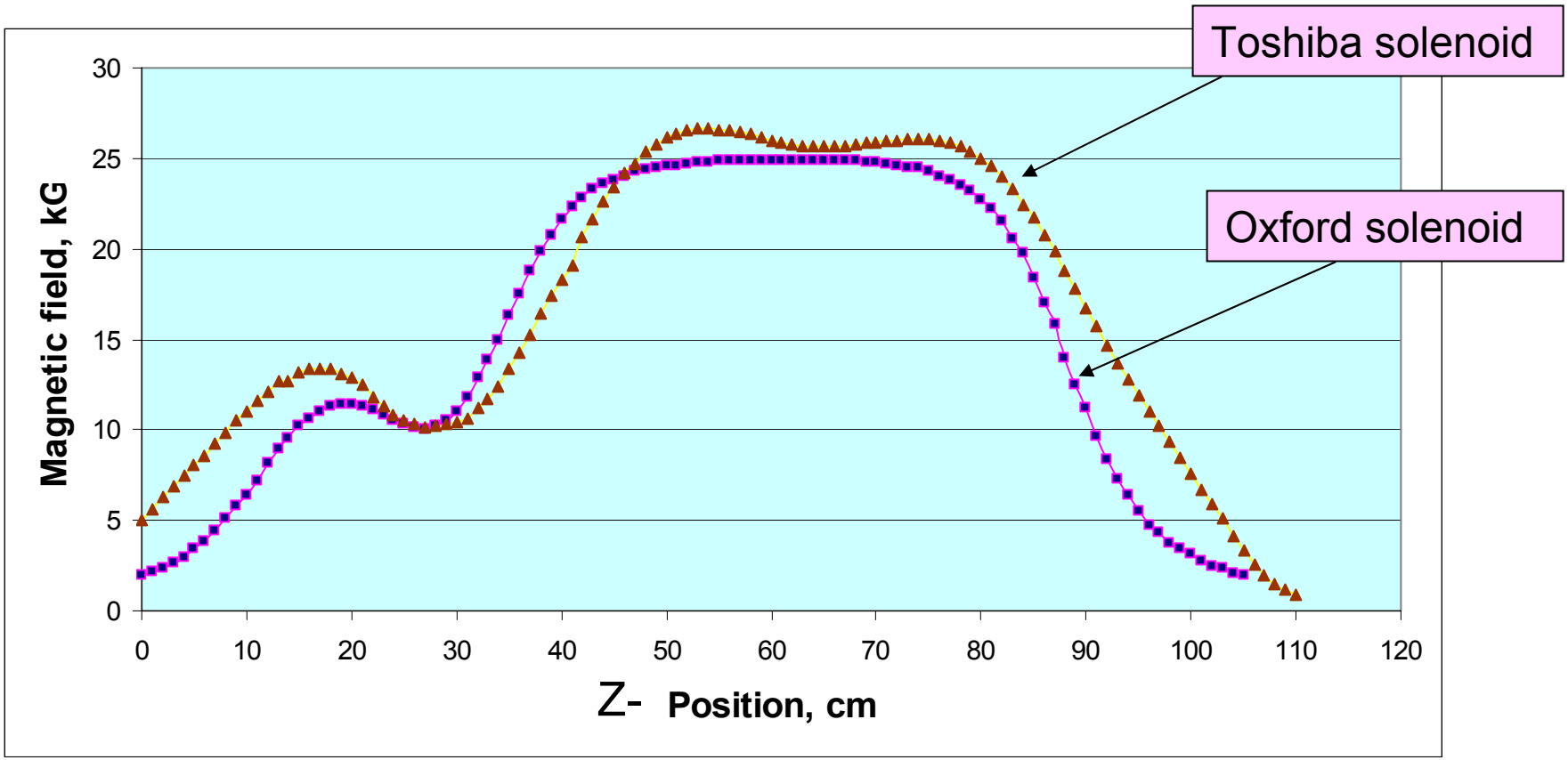

Bz -field component at the solenoid axis.

SONA-transition.

Polarization transfer from electron to proton .

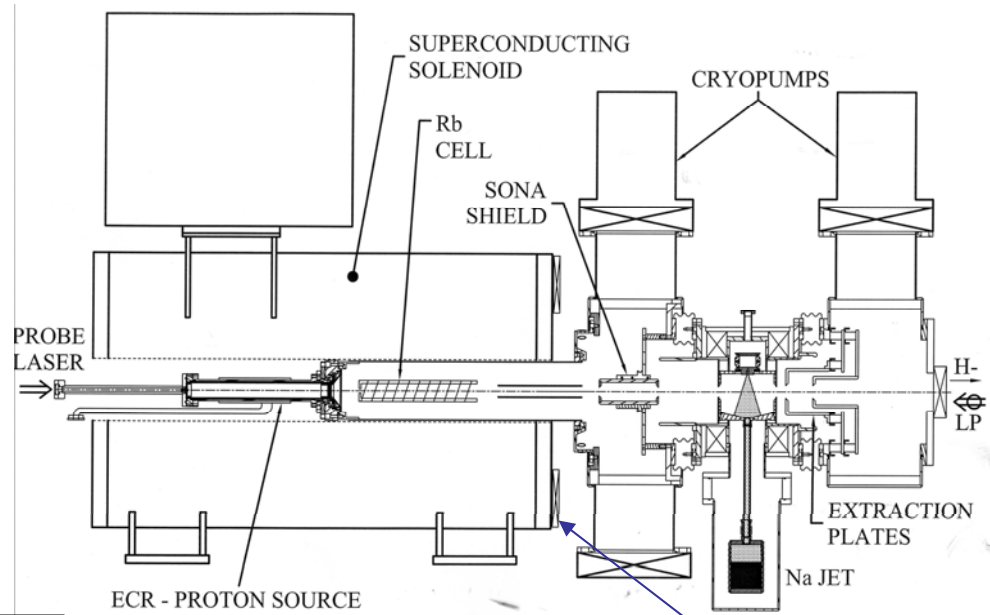

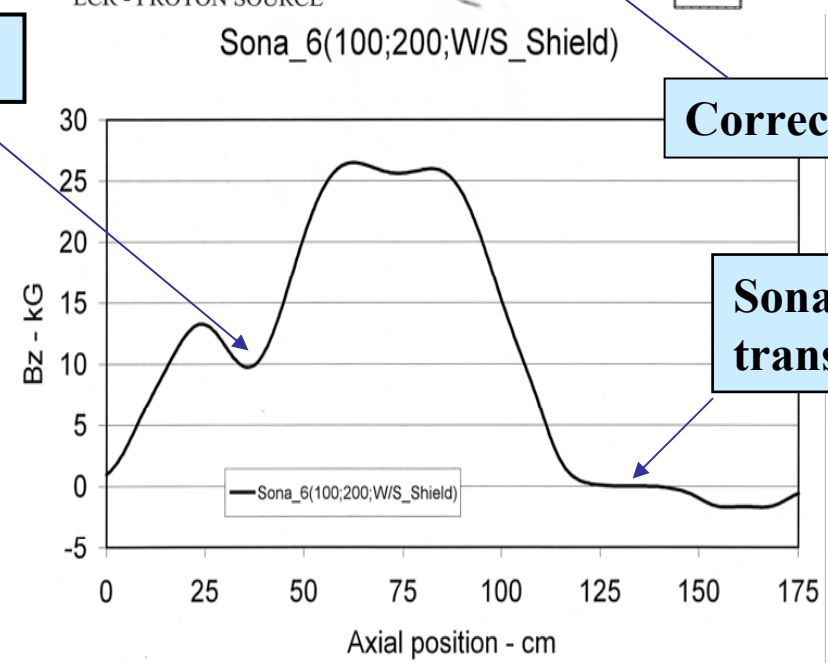

ECR-zone

Correction coil

Sona-transition

Magnetic field gradient in the Sona-region.

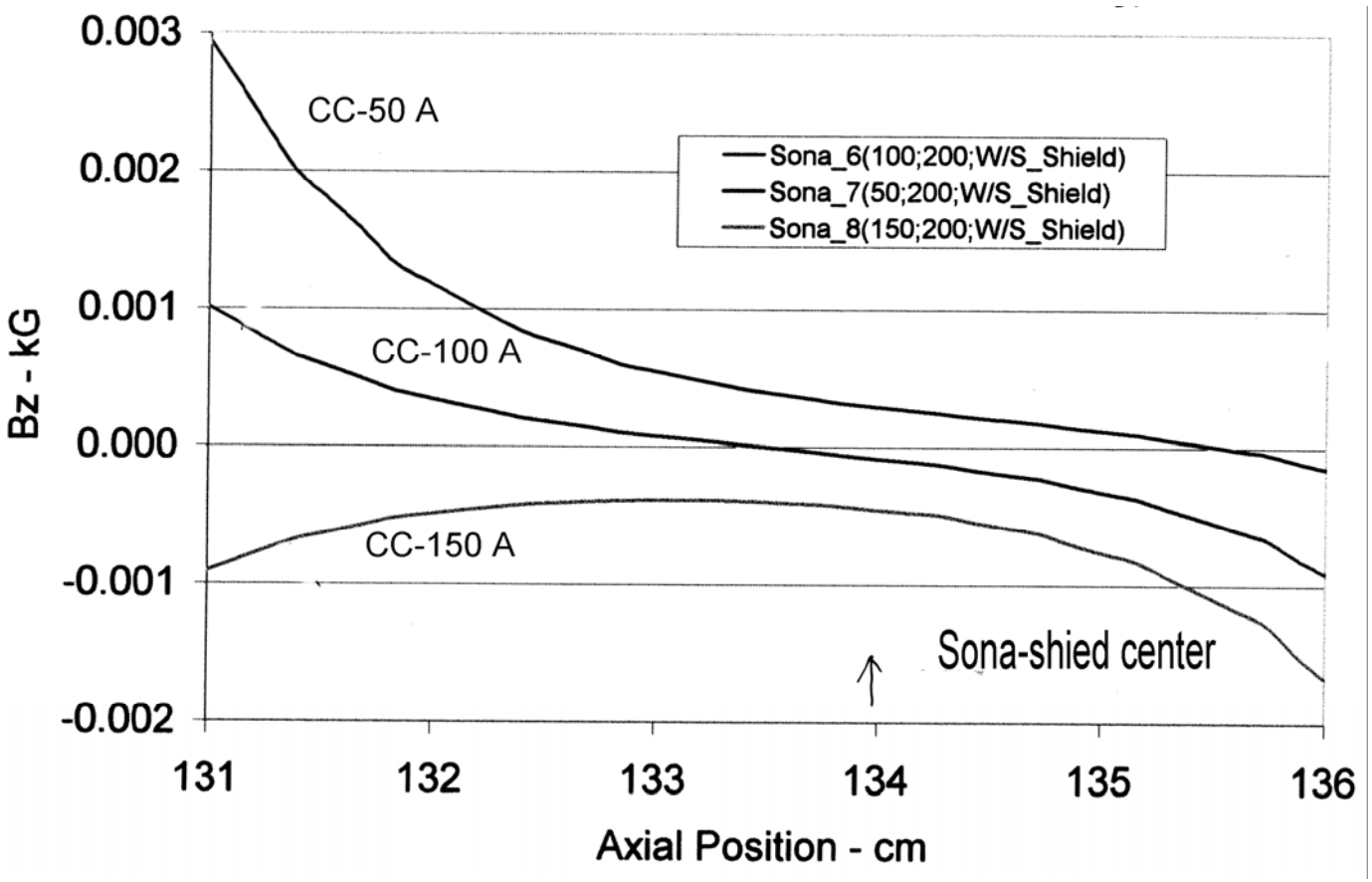

Longitudinal Bz field in the Sona region at different correction coil current settings.

The TRIUMF solenoid disassembly for shipment to BNL.

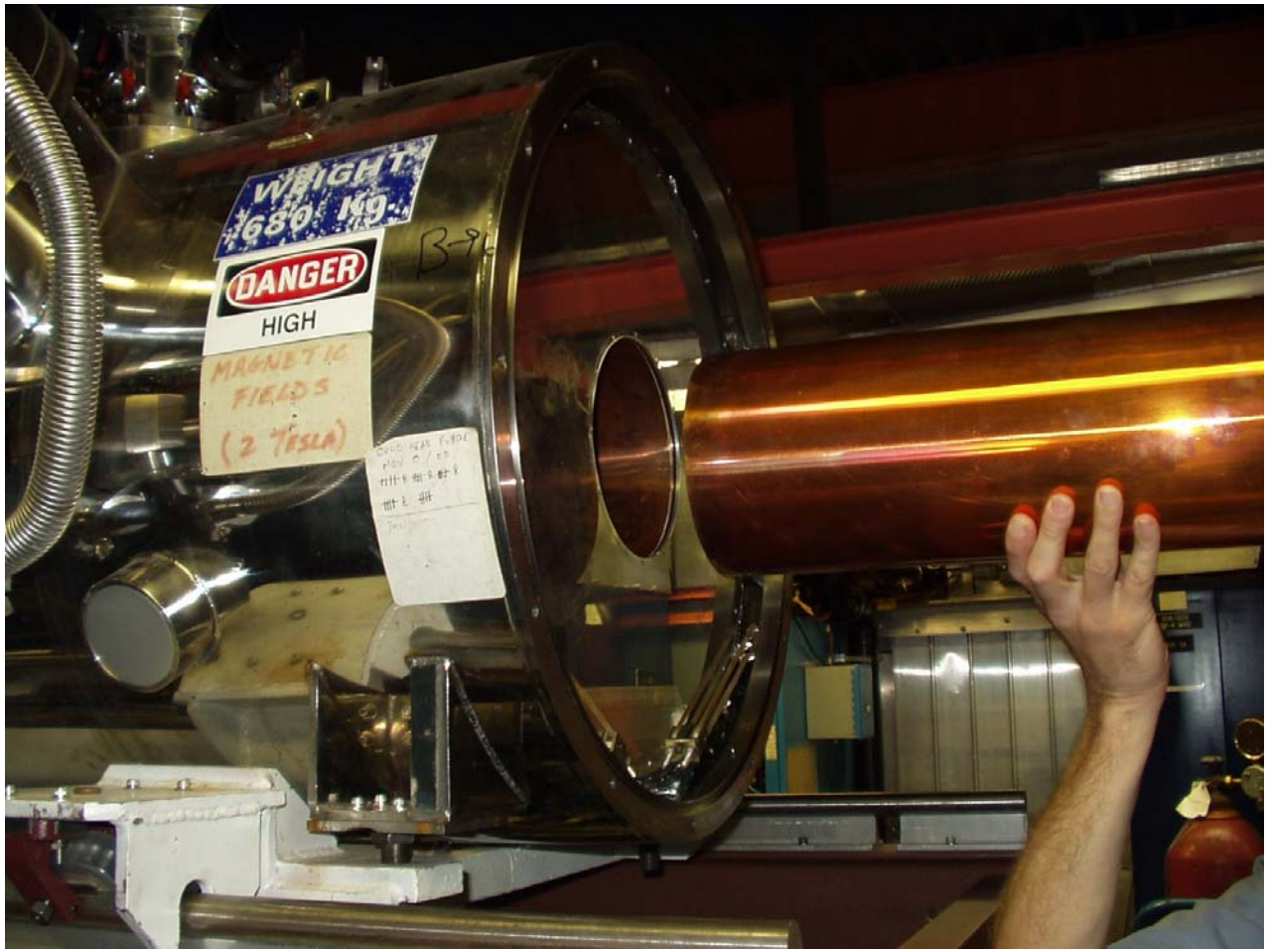

A 70 deg. K shield end plate.

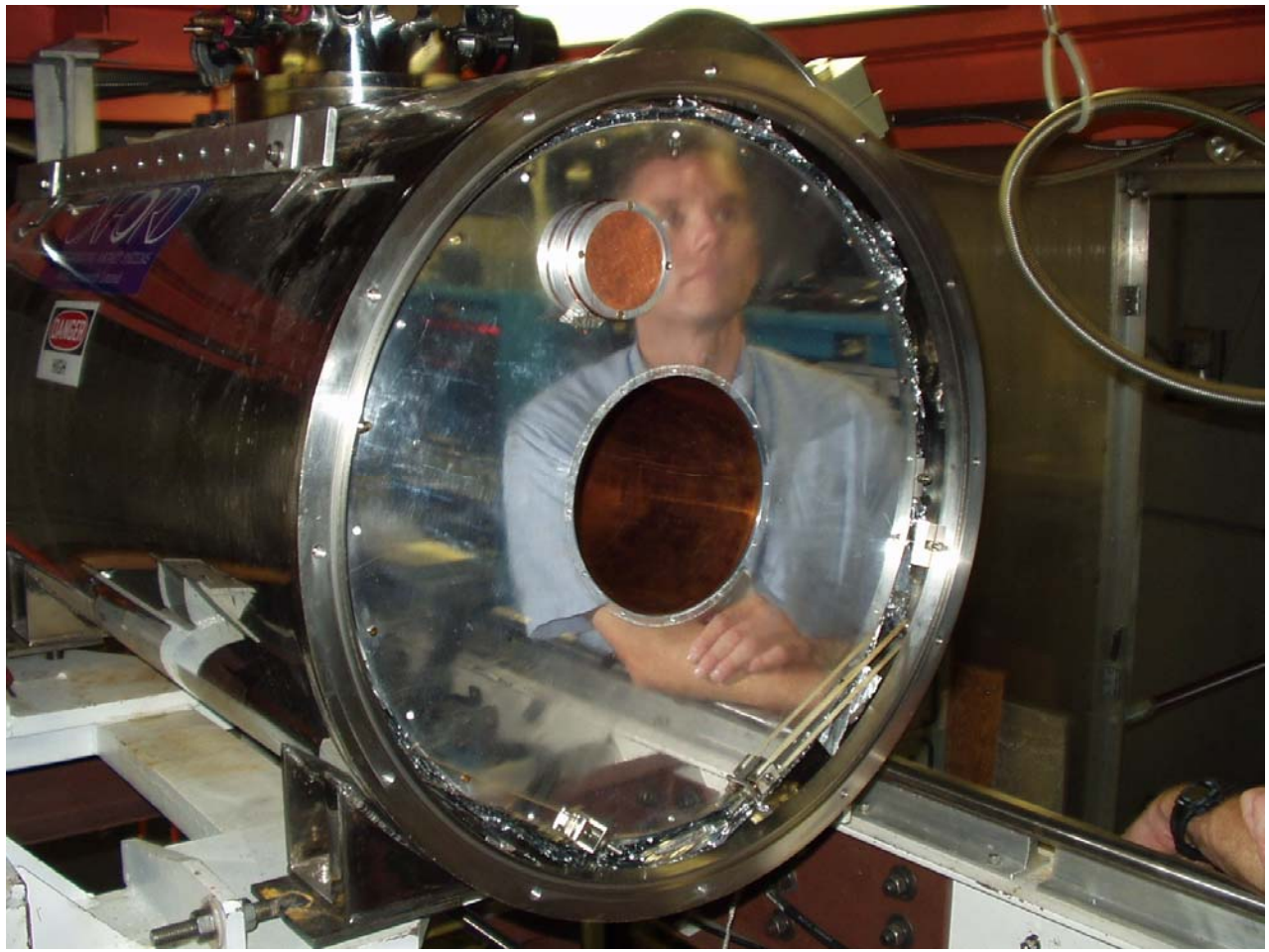

A source layout at the new test bench and the Oxford Instr. solenoid.

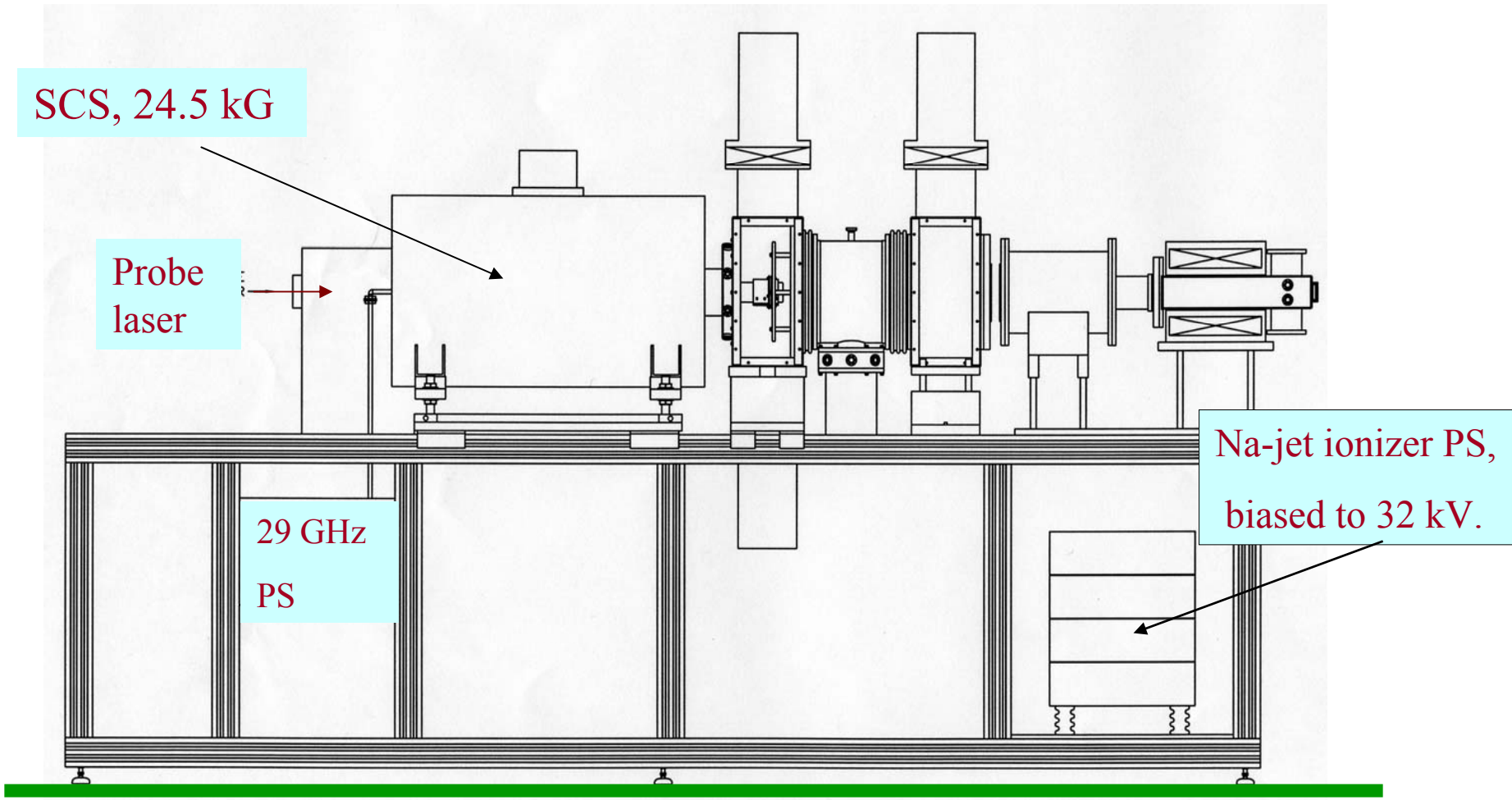

The refurbished OPPIS with Toshiba solenoid.

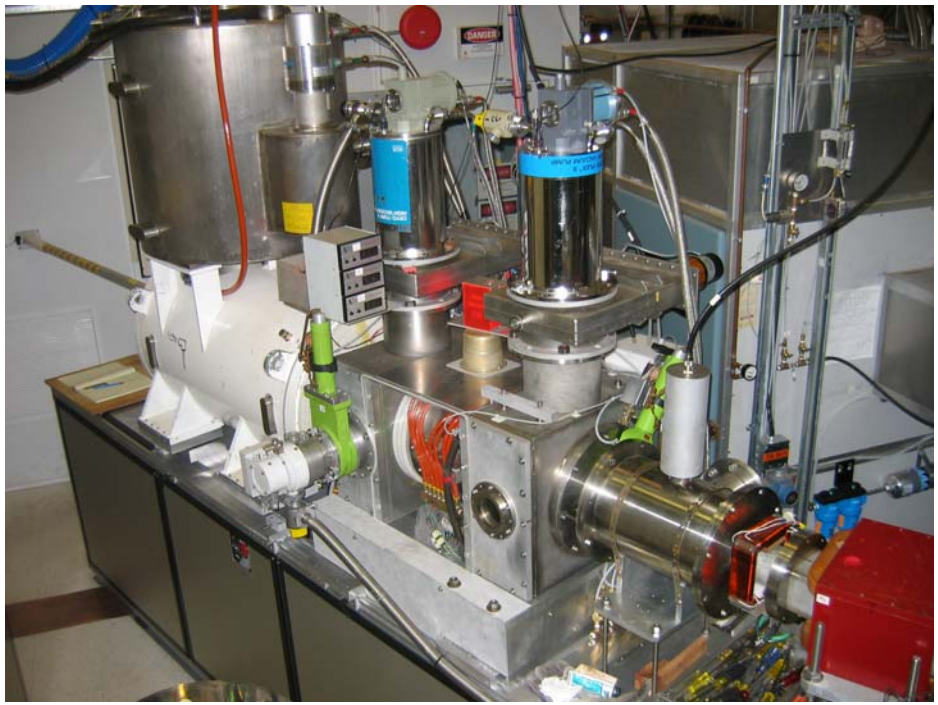

The Oxford Instr. Solenoid at the test bench in the injector hall.

Upgrade status.

- The TRIUMF OPPIS superconducting solenoid had arrived to BNL on October 22.
- At BNL in preparation for the solenoid arrival the operational OPPIS was completely refurbished. New support frame, a Na-jet ionizer power supply system was upgraded, a new plumbing, wiring and realignment.
- At present, the source is back into operation with the old solenoid.
- A new solenoid was assembled at the separate test-bench in the injector hall. We plan to complete all tests and (if successful) install the solenoid to the OPPIS by the end of November.
- We begin the OPPIS optimization with the Lamb-shift polarimeter. The final polarization optimization will require an access to the 200 Mev polarimeter.

Conclusions.

- BNL OPPIS reliably delivers polarized H^- ion beam (P= 80%) for the RHIC spin program.

- A beam intensity exceeds RHIC limit, which allowed strong beam collimation in the Booster, to reduce longitudinal and transverse beam emittances.

- The beam intensity increase and polarization improvement to 85% value is expected after the source upgrade with the Oxford Instr. solenoid.
- This should provide sufficient intensity and higher polarization for the planned RHIC luminosity increase in run 2005.