Fundamental and HOM damper designs

C-AD Machine Advisory Committee Meeting

Eunmi Choi
Brookhaven National Laboratory

Feb. 11-13, 2008

Outline

- Introduction
- Fundamental mode damper
- HOM damper
- Conclusions
- Future work

Introduction

Fundamental mode damper requirements and challenges:

- From injection, a fundamental mode damper will be in because during ramp-up, the beam will go through the cavity's resonance.
- At storage, the damper will be withdrawn. And the cavity frequency will always remain below the beam frequency to fulfill Robinson stability condition.
- During the damper withdrawn, the cavity will experience the frequency shift.

The shifted frequency should not cross the beam revolution frequency!!

(df = frev – fcav ≈ 10 kHz)

- The fundamental mode damping factor is going to be around 10^7.
  - $Q_0 \sim 10^9$
  - $Q_{load} \sim 10^2$

Higher order mode (HOM) damper requirements and challenges:

- HOMs should be properly damped out in order to prevent instabilities; a restriction on coupled-mode instability at 167 MHz (details in Nathan's talk)

Fundamental damper

- Will be magnetically coupled at the end of the cavity.

Analytic calculation:

1. Mutual inductance

$$\Phi_{12} = \int B_1 \cdot dA_2 = \frac{\mu_0 i_1}{2\pi}\left(d_{Do} - d_{Di}\right)\ln\frac{r_{Do}}{r_{Di}}$$

$$\therefore \underline{M} = \frac{\Phi_{12}}{i_1} = \frac{\mu_0}{2\pi}\left(d_{Do} - d_{Di}\right)\ln\frac{r_{Do}}{r_{Di}} \approx \underline{4nH}$$

Damper schematic

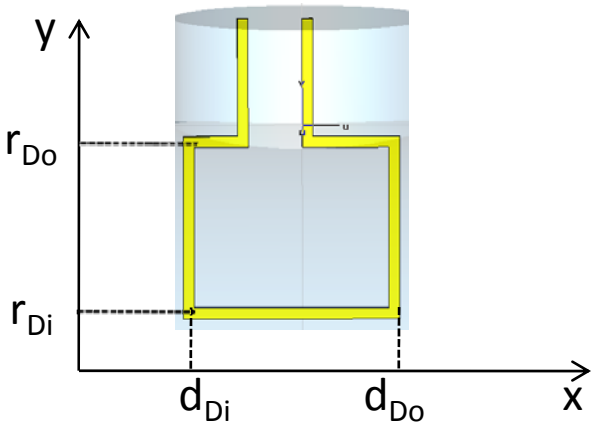

2. Cavity self inductance

From SUPERFISH results, we know that

$$U = 207\,Joules$$

$$\max H = 82kA/m \text{ at } z = 137\text{ cm}, r = 15\text{ cm}$$

$$U = \frac{1}{2}LI^2 = 207\,Joules$$

$$\rightarrow \underline{L} = \frac{2U}{I^2} = \underline{70nH}$$

Fundamental damper

Calculate Q_{load}

Circuit representation

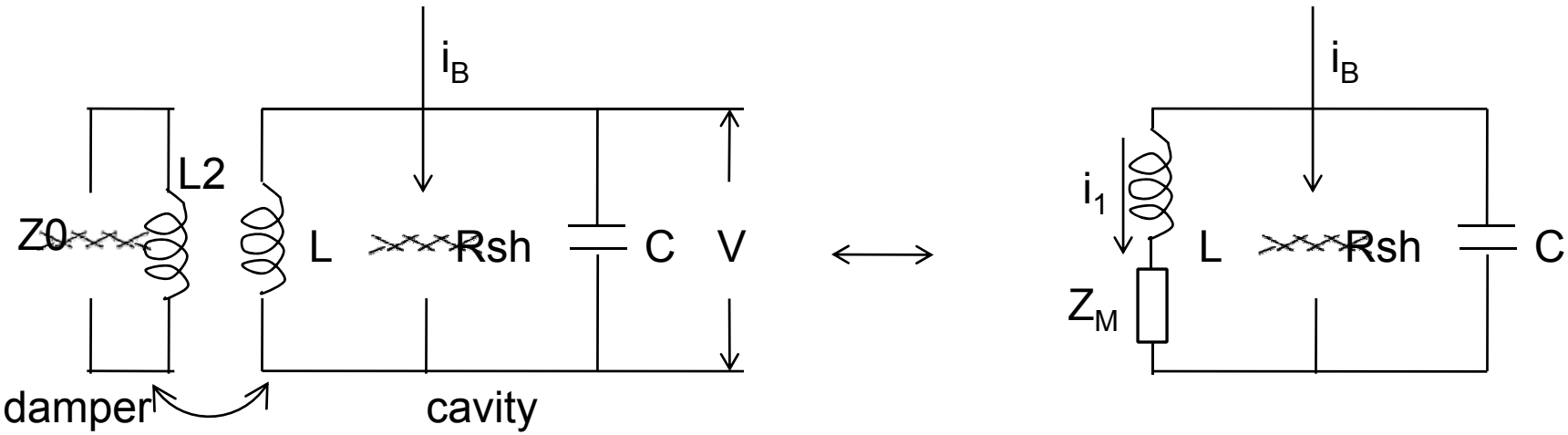

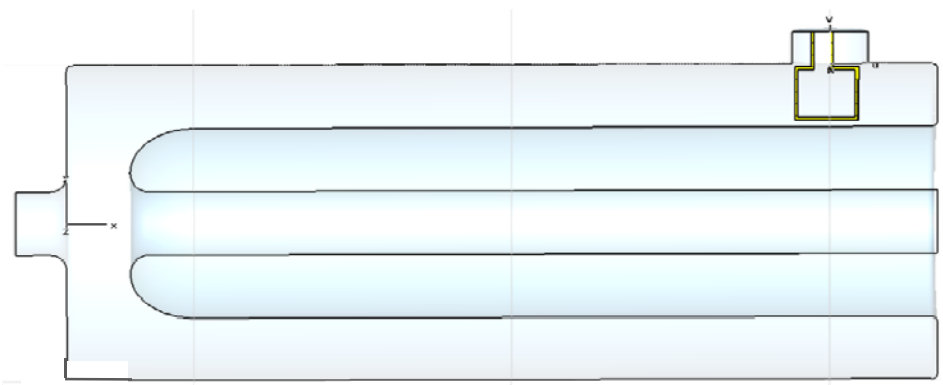

$$Z_M = \frac{(\omega M)^2}{Z_0 + j\omega L_2}$$

$$Q_{ext} = \frac{\omega C}{\mathrm{Re}\left(j\omega L + Z_M\right)}$$

$$\frac{1}{Q_{load}} = \frac{1}{Q_0} + \frac{1}{Q_{ext}}$$

Fundamental damper

Calculate P_{diss}

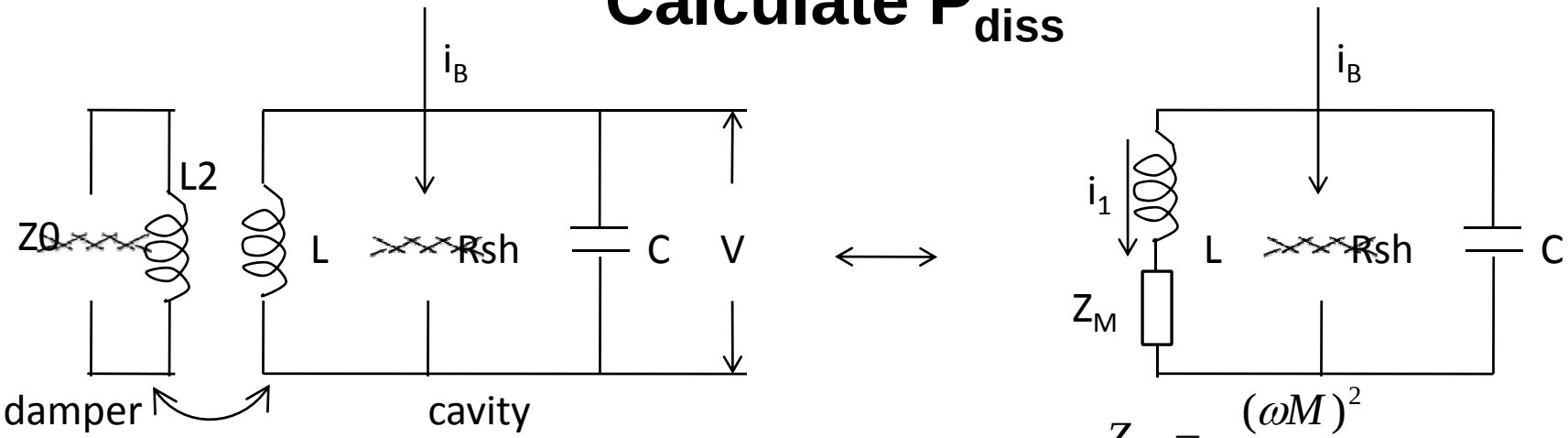

$$Z_M = \frac{(\omega M)^2}{Z_0 + j\omega L_2}$$

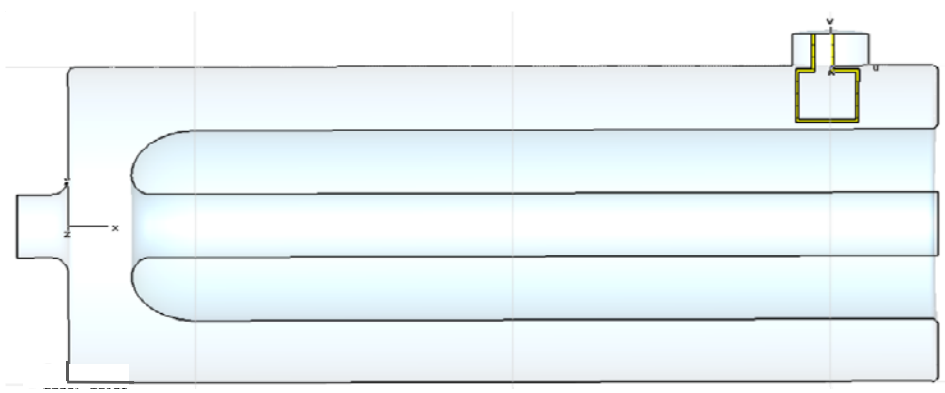

$$Z_{tot} = \frac{R_{sh}\left(Z_M + j\omega L\right)}{R_{sh} + Z_M + j\omega L + R_{sh}\left(Z_M + j\omega L\right) j\omega C}$$

$$V = Z_{tot} \cdot i_B$$

$$i_1 = \frac{V}{Z_M + j\omega L} = \frac{Z_{tot} \cdot i_B}{Z_M + j\omega L}$$

$$P_{diss} = \frac{1}{2}\mathrm{Re}\left(Z_M\right) i_1 \cdot i_1^*$$

Fundamental damper

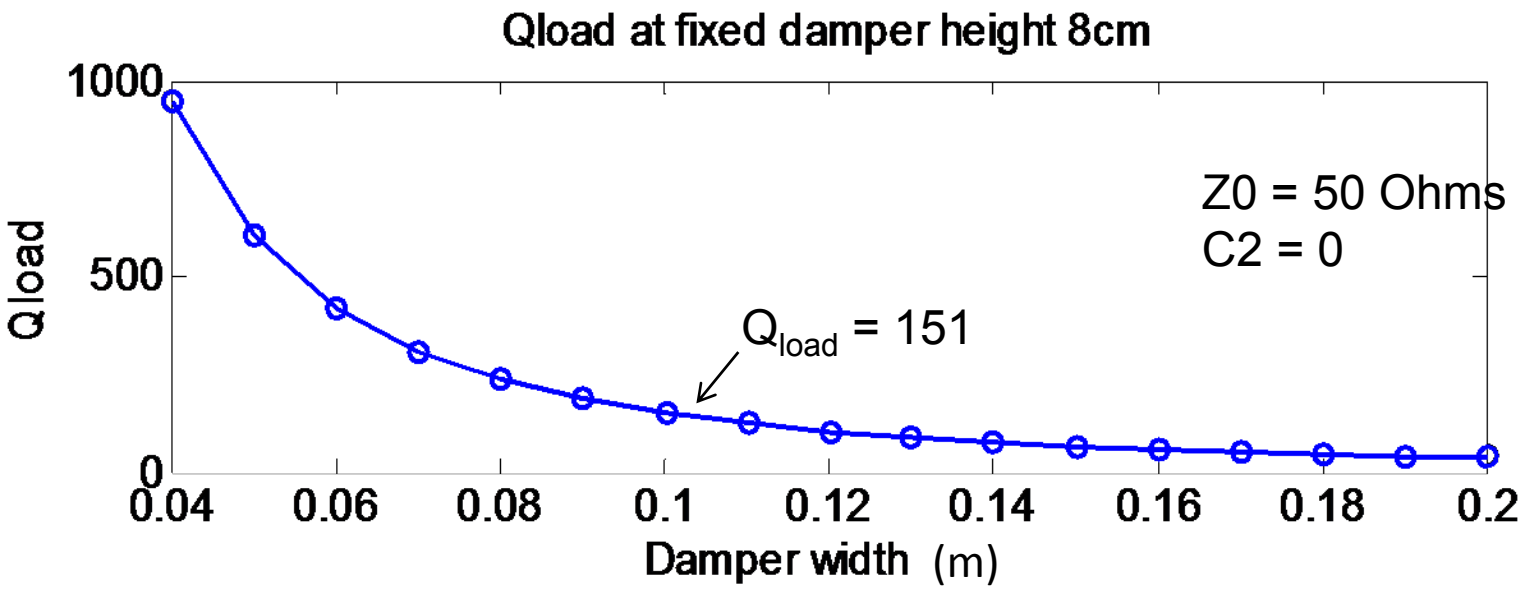

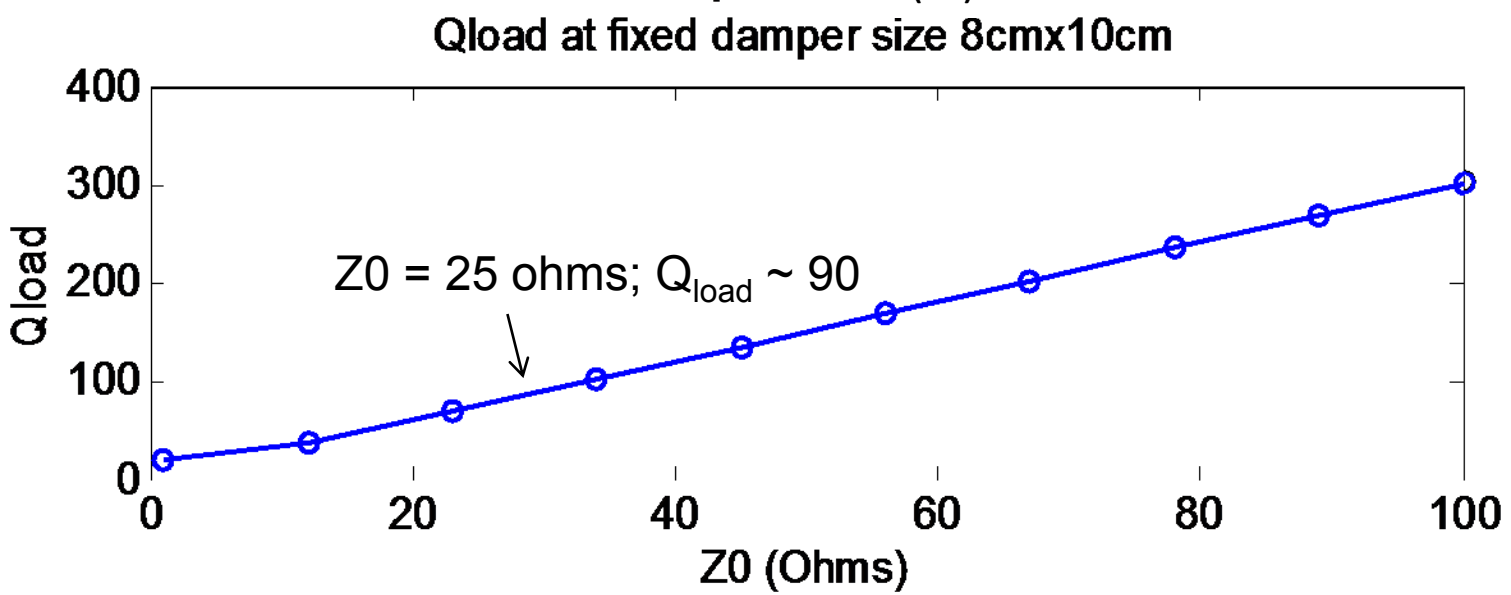

Fundamental damper

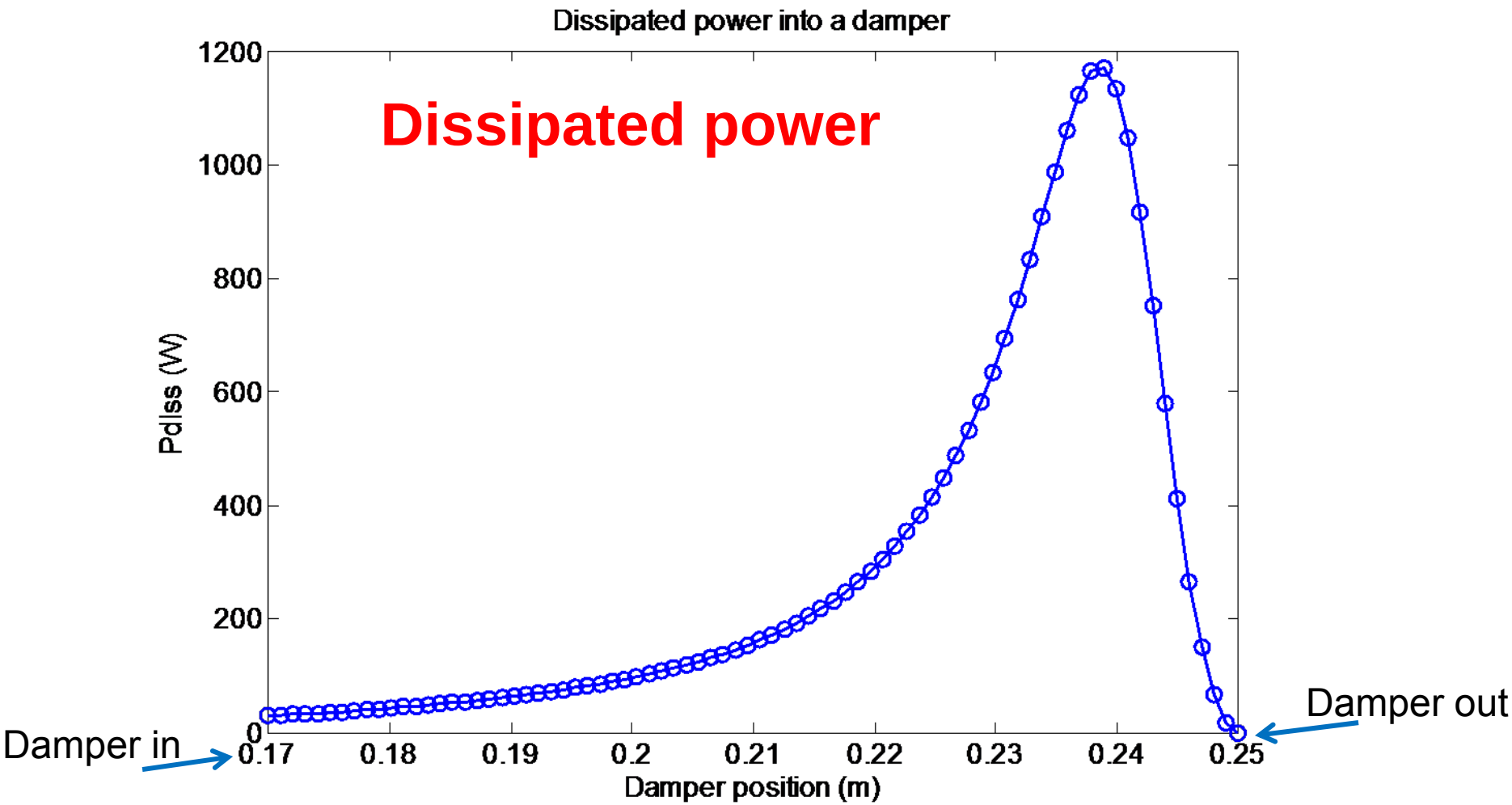

❑ The figure takes into account the frequency shift as a function of damper position based on the microwave studio simulation. The cavity is detuned to be -10 kHz. When the damper is completely in, the frequency shift from the cavity eigen frequency is -28 kHz (correspondingly delta = 10^{-3}).

Simulation

CST Microwave Studio

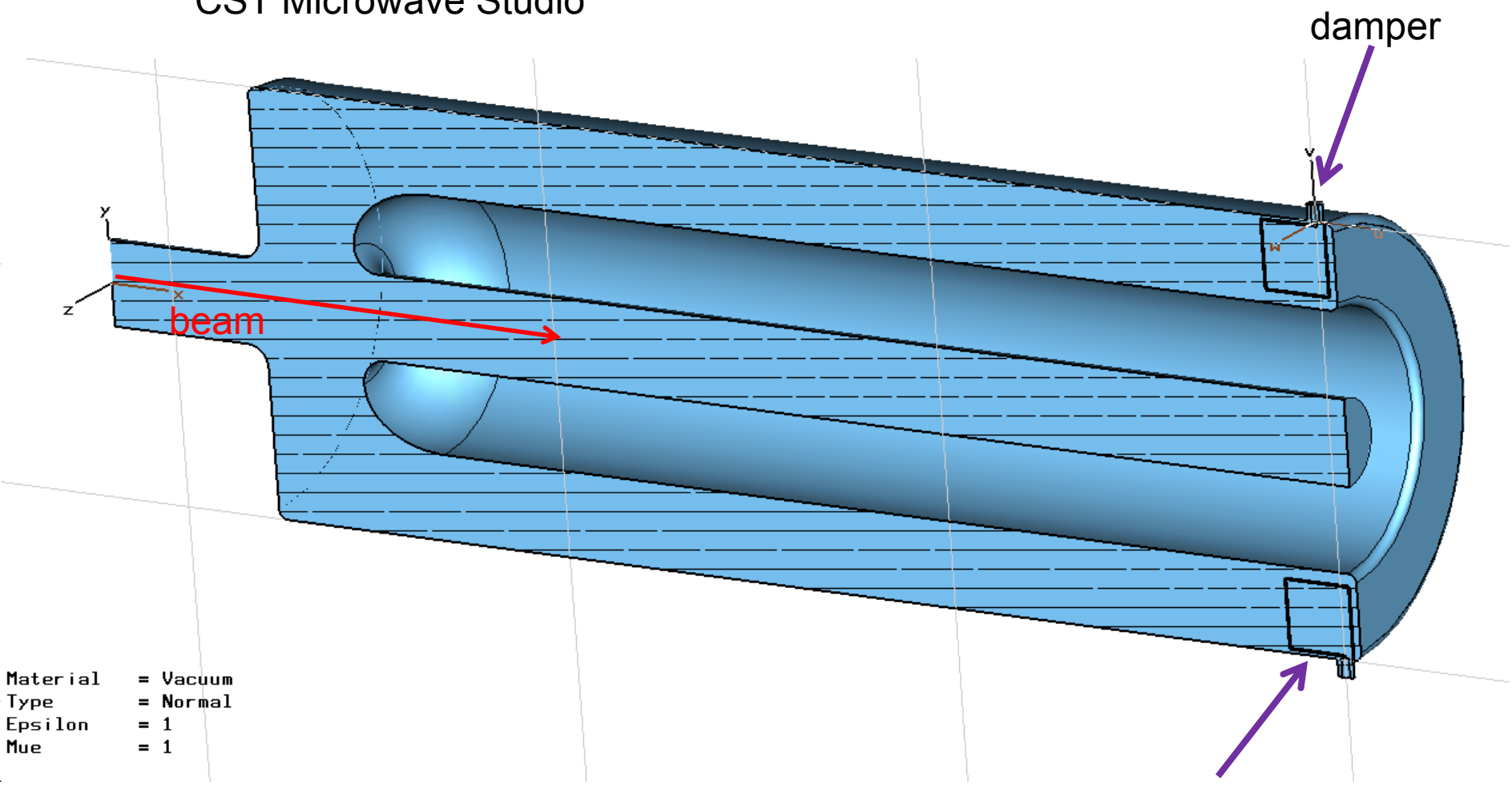

For simulation purpose, the mirror damper is inserted. We only have one damper.

Simulation (empty cavity)

f_0 = 56.264 MHz, R/Q = 81.2

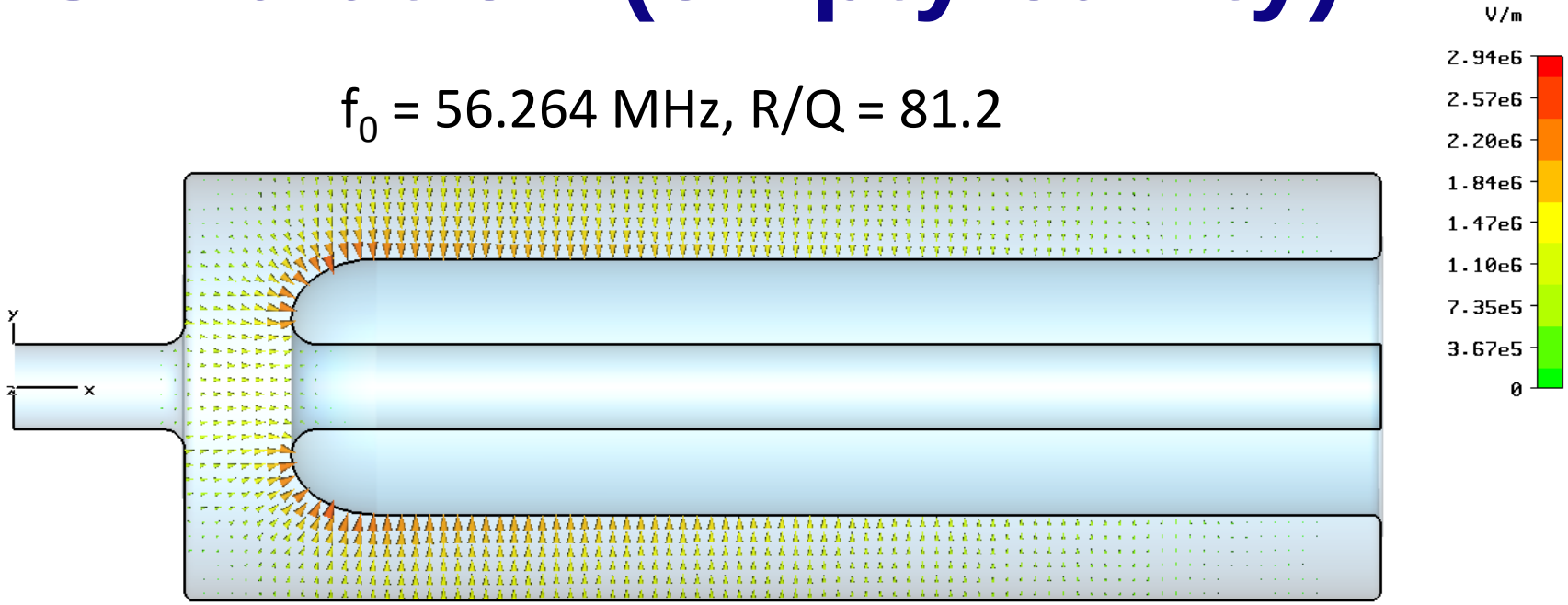

Type = E-Field (peak)
Monitor = Mode 1
Plane at z = 0
Frequency = 56.2642
Phase = 0 degrees
Maximum-2d = 2.93934e+006 V/m at 40.166

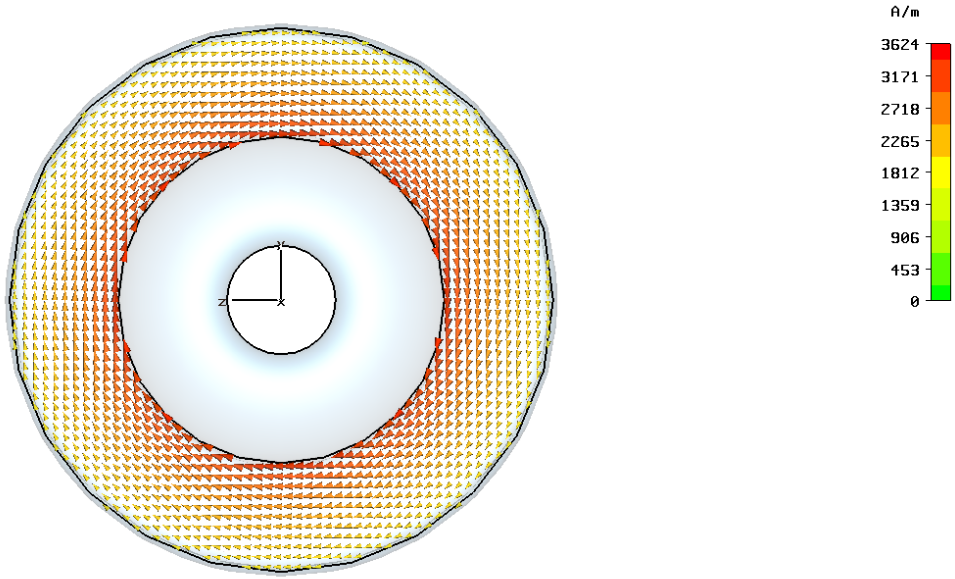

Type = H-Field (peak)
Monitor = Mode 1
Plane at x = 80.051
Frequency = 56.2642
Phase = 90 degrees
Maximum-2d = 3624.39 A/m at 78.5771 / 5 / -15

Simulation

With a damper

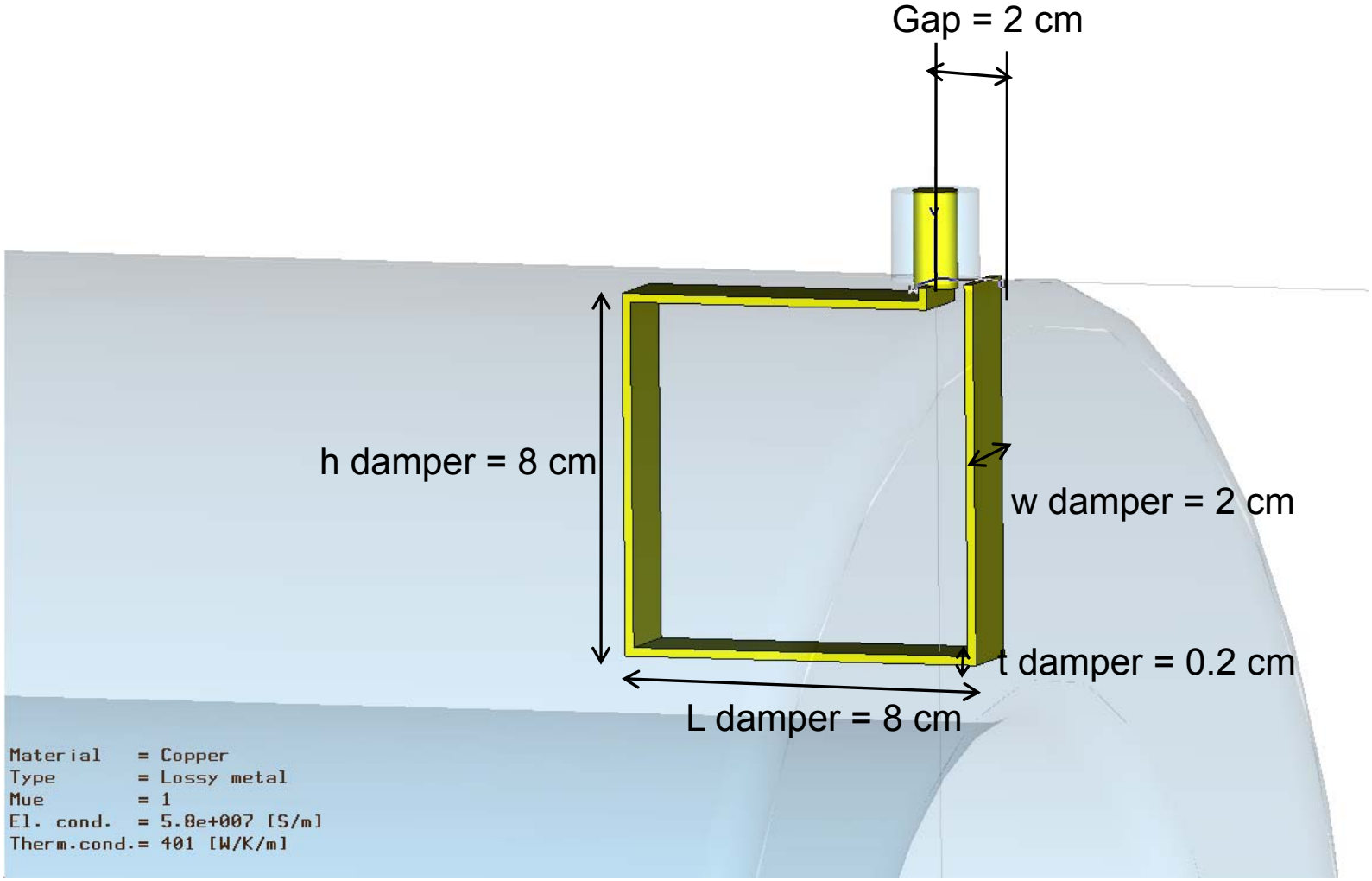

Simulation

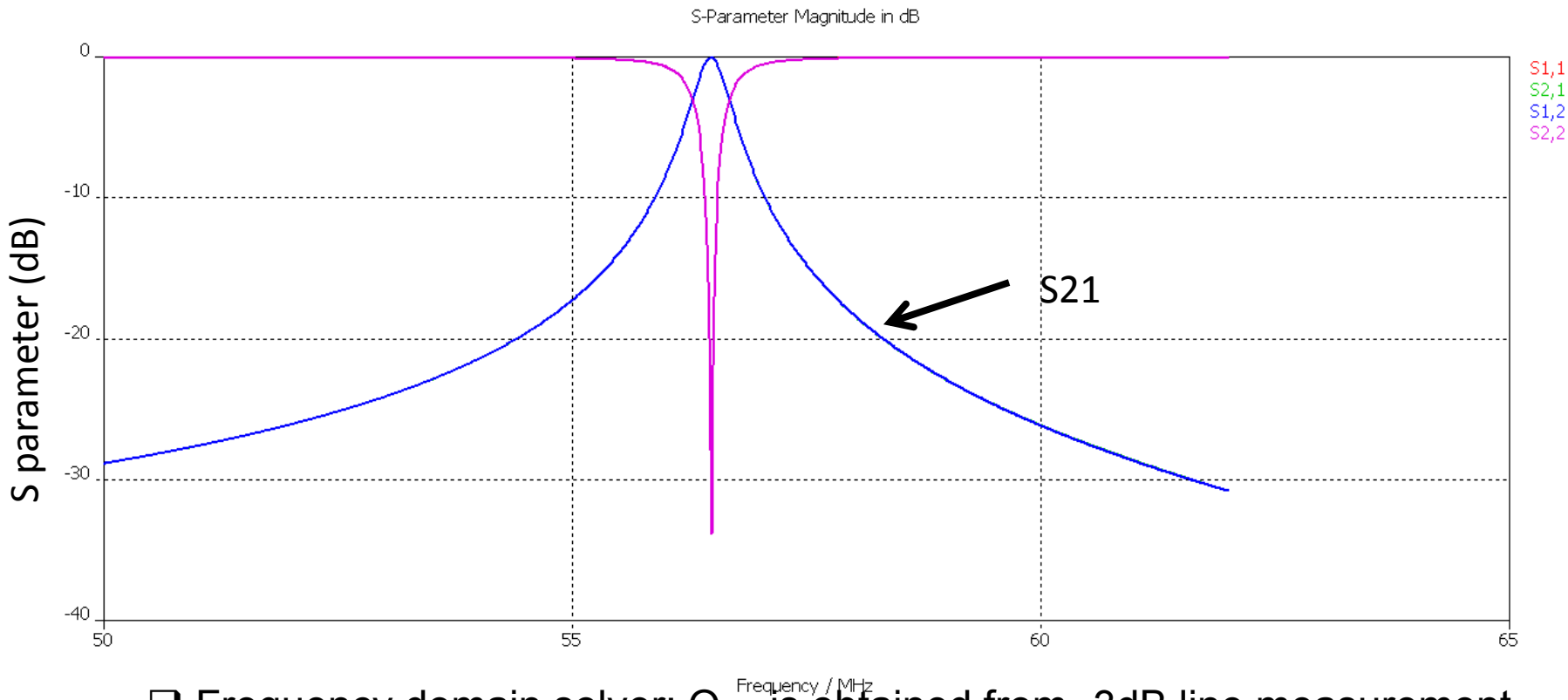

- Frequency domain solver: Q_{ext} is obtained from -3dB line measurement. (assuming the geometry defined in previous slide)

Δf = 112 kHz

Q_{ext} = 286

- Analytic calculation:

Δf = 17.5 kHz

Q_{ext} = 237

Parameter study

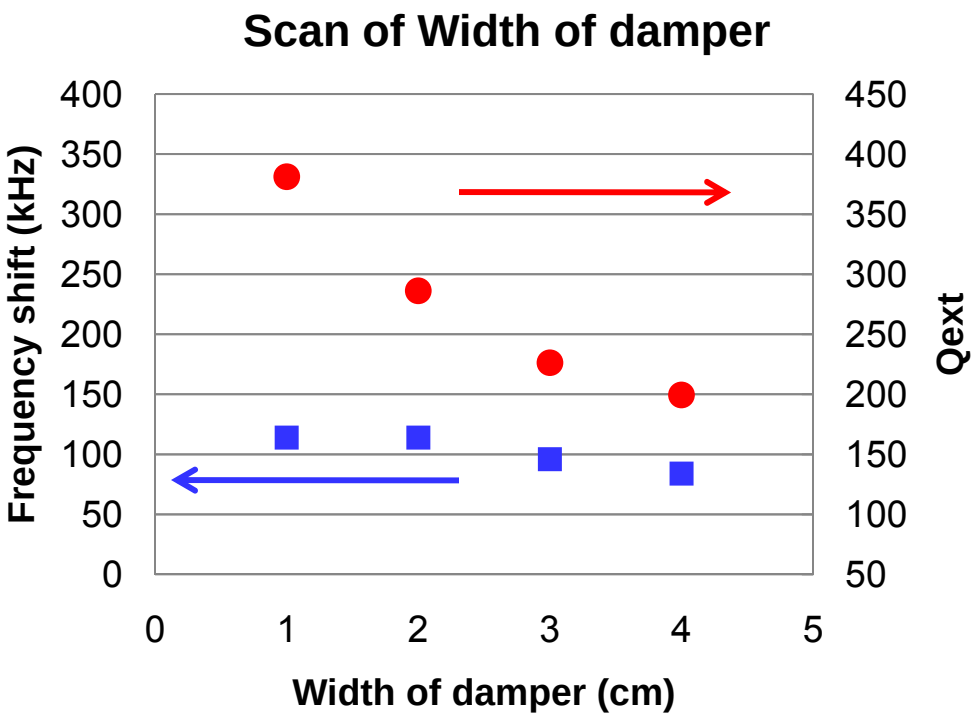

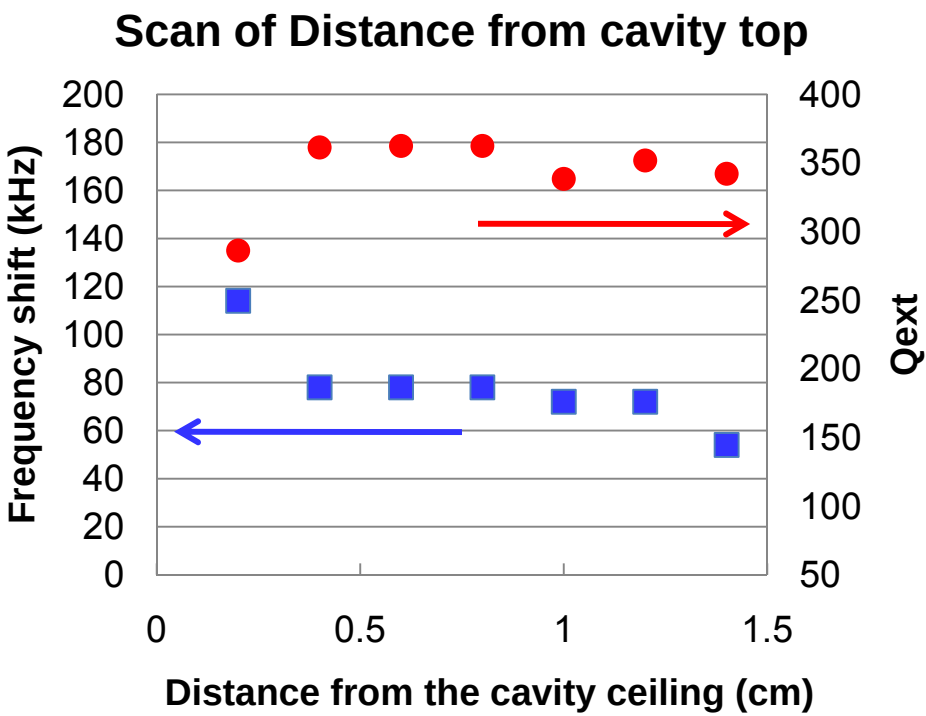

Observation:

- As width of damper increases, Qext decreases. (more effective way to take energy out)
- The vertical location of the damper is not critical.

Parameter study

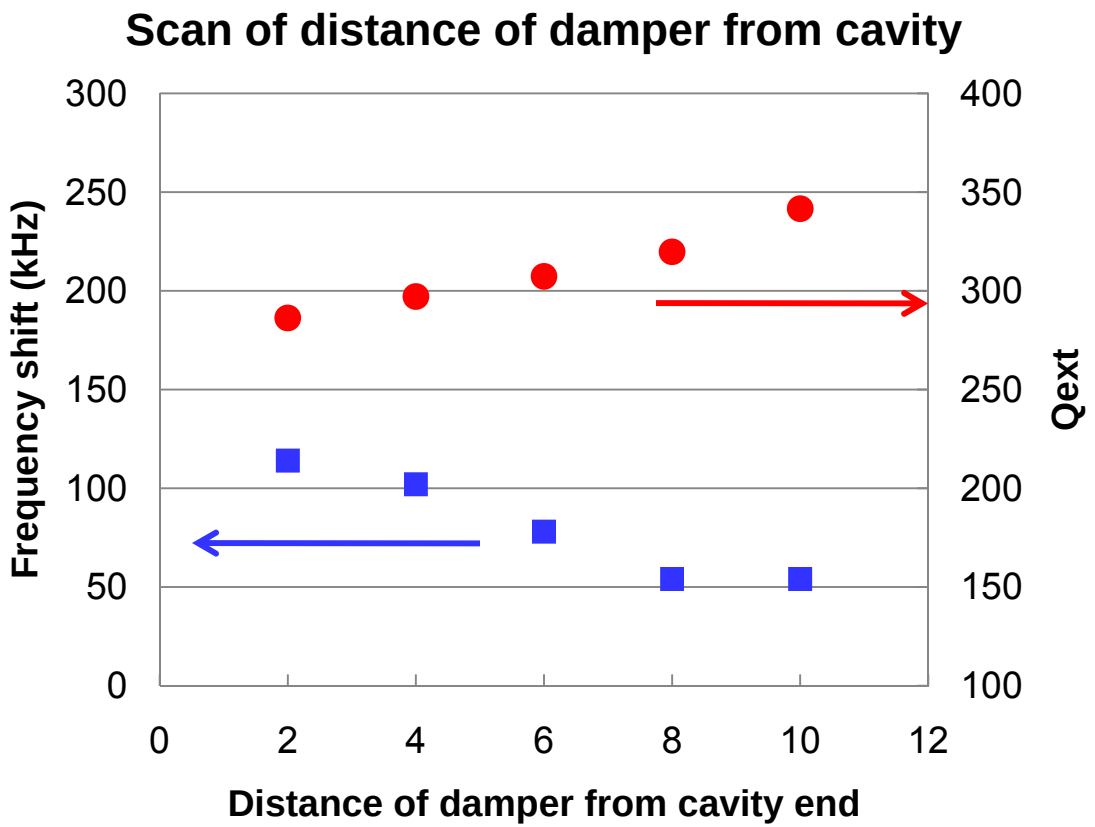

Observation:

- Longitudinal location of the damper end matters.
- As the damper gets closer to the cavity end, Qext decreases and the amount of frequency shift reduces.

From parameter study, we can optimize frequency shift and loaded Q factor.

w_damper = 4 cm
d2_gap = 0.4cm (distance from the cavity ceiling)

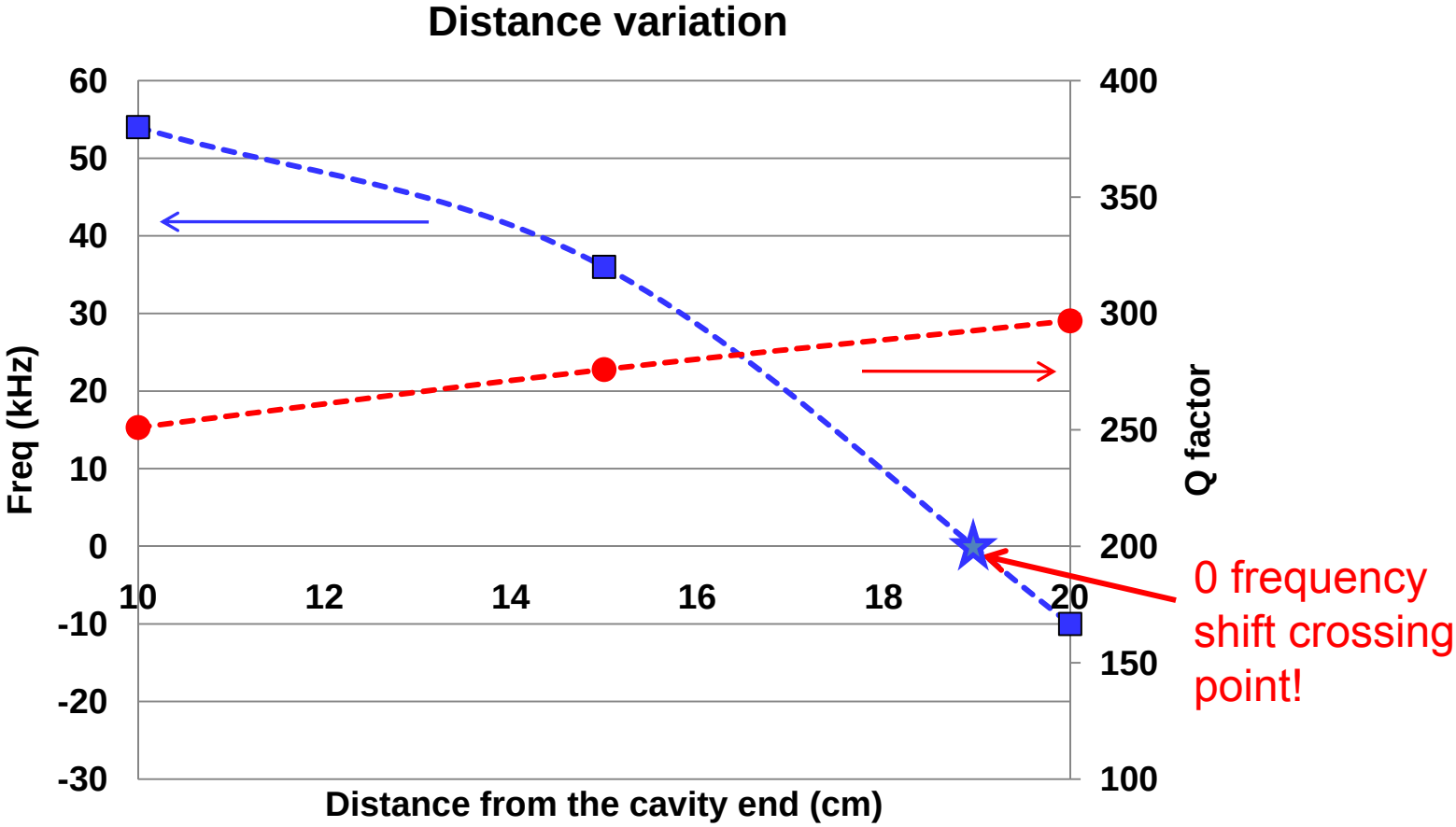

Behind idea: Use electric field coupling also to make it counteract the frequency shift. $\Delta f \propto \left(\varepsilon_0 E^2 - \mu_0 H^2\right)\Delta V$

Simulation of frequency response as the damper is withdrawn.

Damper size: 8cm x 8cm
Width of damper: 4 cm

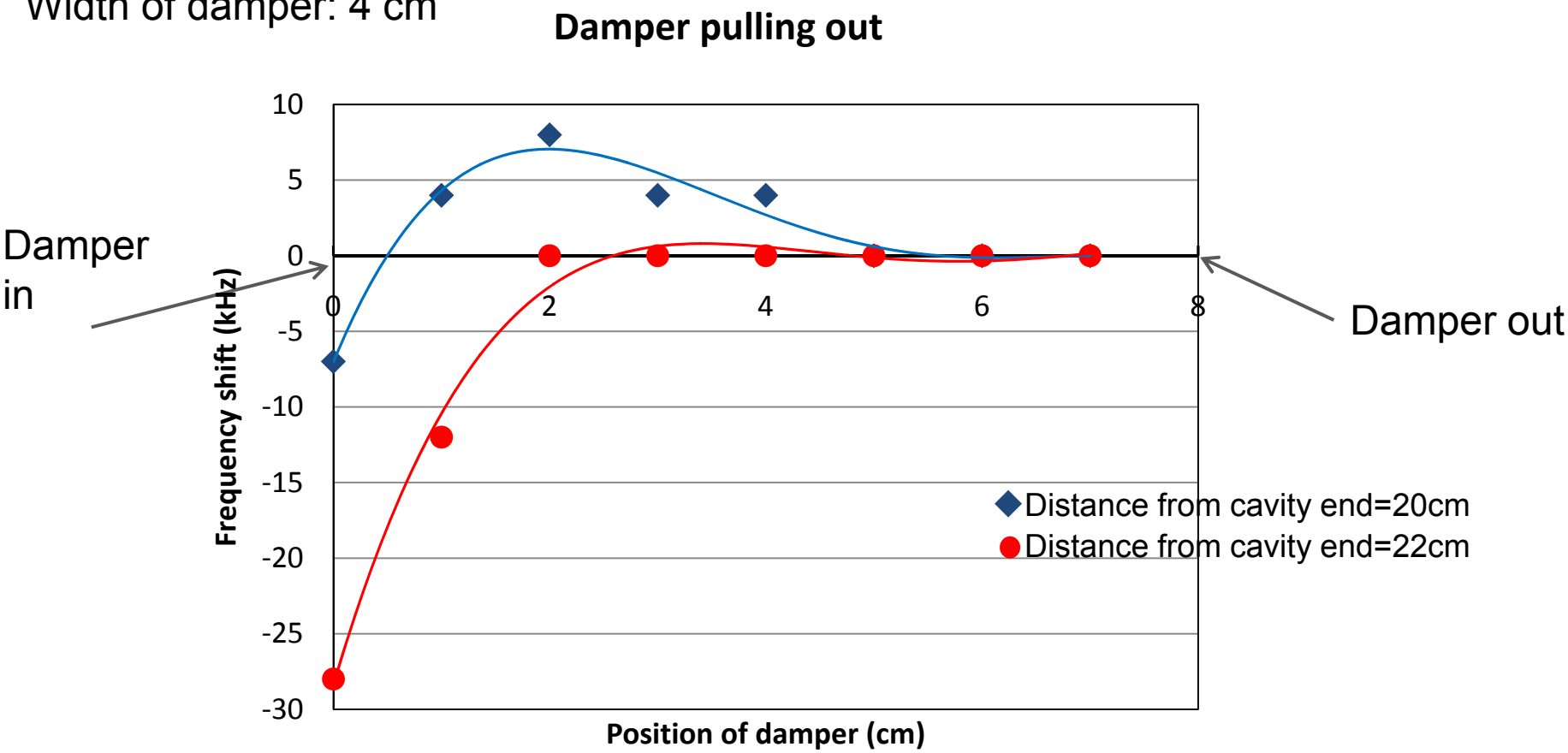

- ❑ 20cm: Frequency is increased by +8 kHz when the damper is pulled out. This will be dangerous because it will pass the beam revolution frequency. (resonant)
- ❑ 22cm: Frequency shift is below or equal to 0 when the damper is pulled out.

Power on damper port surface

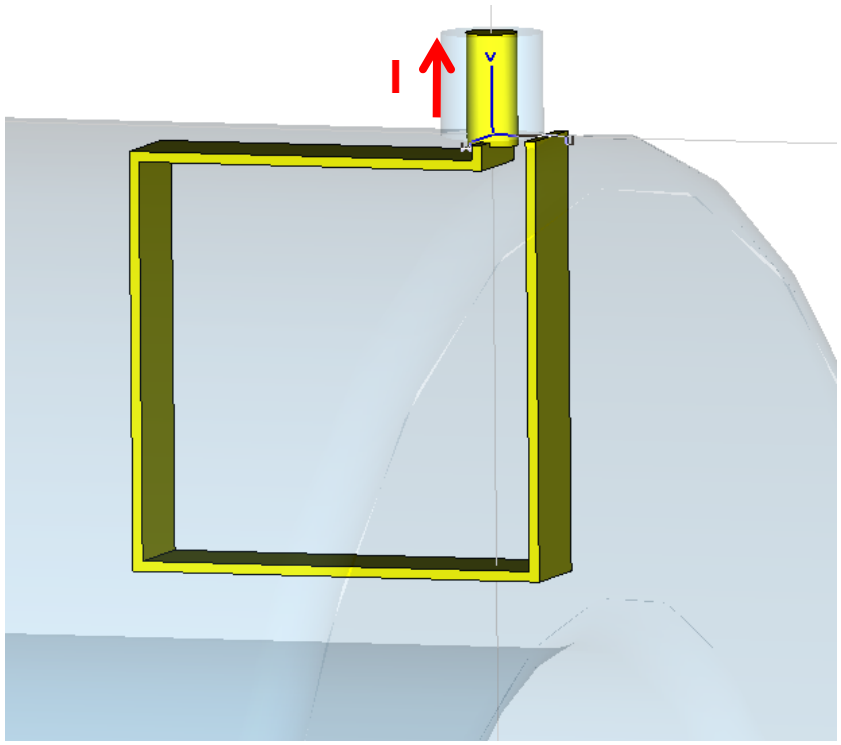

From microwave studio, I ~ 500 A

$$P = \frac{1}{2} R I^2 = \frac{1}{2} \times 10 \times 10^{-9} \times (500)^2$$
$$\cong 1\,\mathrm{mW}\ (\text{assuming V} = 2.6\,\mathrm{MV})$$

Q_L~300; R/Q*Q_L = 24 kOhm
P ~ 0.1 uW
Q_L ~ 4000; R/Q*Q_L = 3.24*10^5
P ~ 16 uW

HOM damper

- *Results from Microwave studio: Empty cavity case.*

Monopoles		Dipoles	
F0 [MHz]	R/Q [Ω]	F0 [MHz]	R/Q [Ω]
56.264	81.1975	258.461	11.37
167.848	33.4439	310.261	17.05
276.156	30.4197	387.042	14.59
377.309	36.7545	476.751	12.99
468.380	36.5653	571.597	14.17
559.683	20.4173	663.436	21.65
657.928	8.4522	741.278	15.58
760.190	3.7061	813.868	12.1
862.256	1.8042	899.823	2.2
962.647	0.8958		
1105.129	28.8733		
1169.768	1.1905		

Beta = 0.995472

Field pattern (f0 = 56.264 MHz)

E field

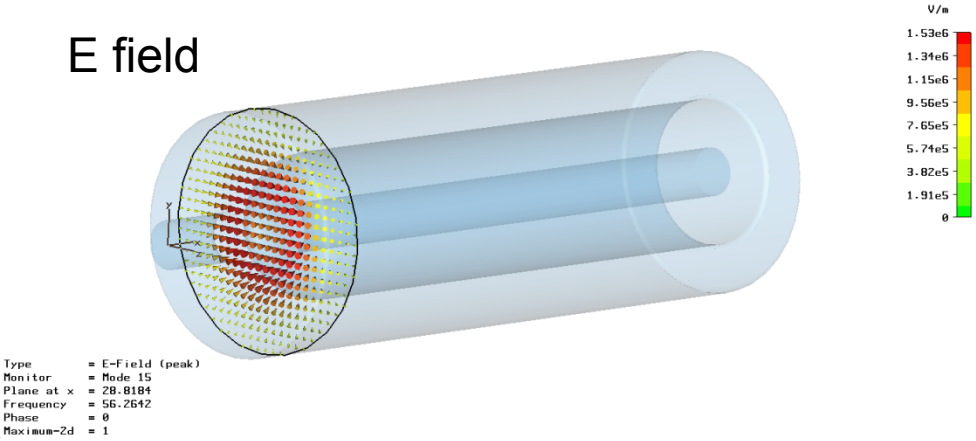

H field

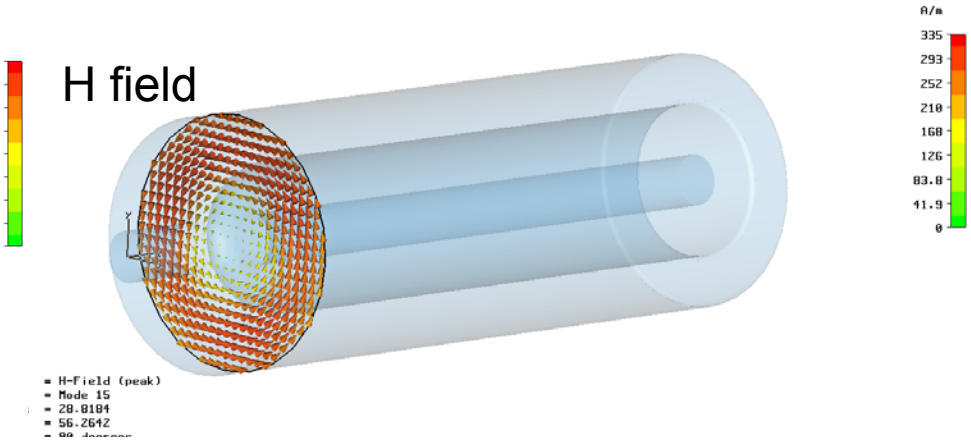

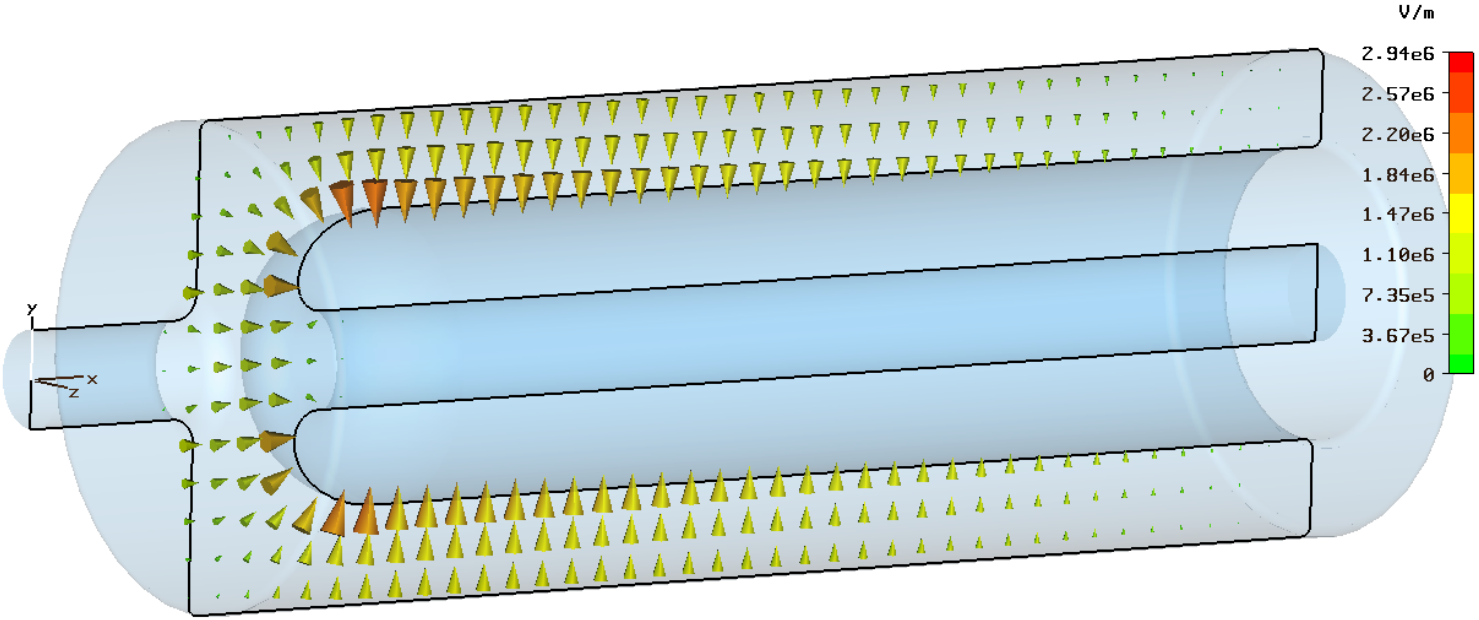

Type = E-Field (peak)
Monitor = Mode 15
Plane at z = 0
Frequency = 56.2642
Phase = 0 degrees
Maximum-2d = 2.93934e+006 V/m at 40.1667 / 15 / -3.06152e-015

Field pattern (f0 = 167.848 MHz)

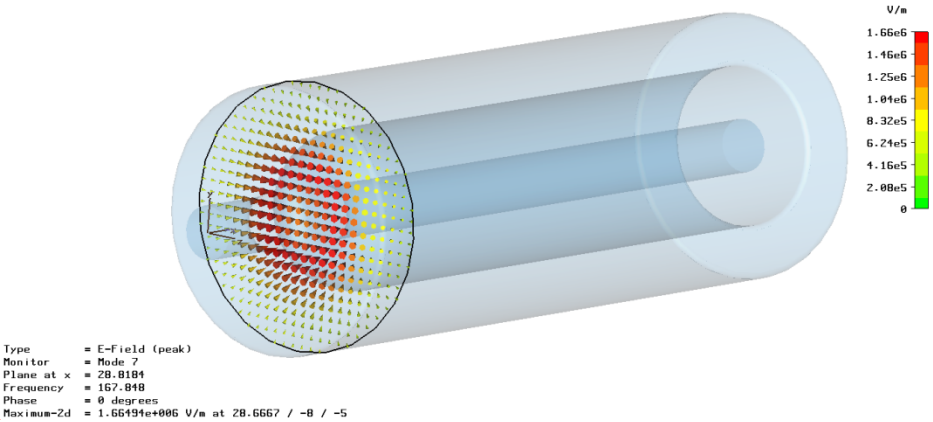

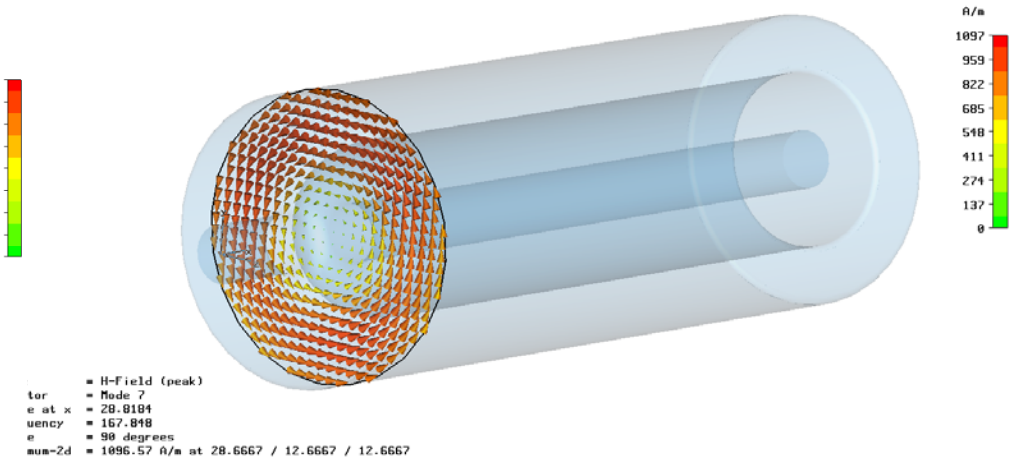

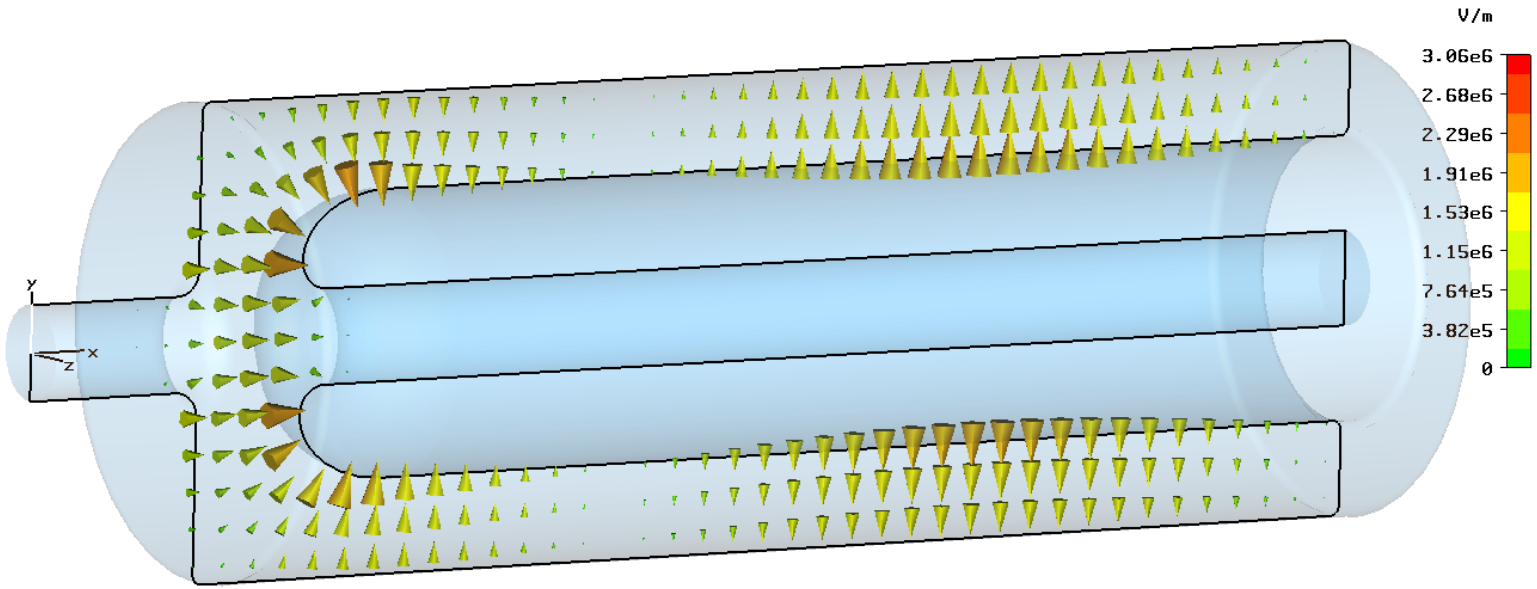

Type = E-Field (peak)
Monitor = Mode 7
Plane at z = 0
Frequency = 167.848
Phase = 0 degrees
Maximum-2d = 3.05741e+006 V/m at 32.5 / 10.3333 / -3.06152e-015

Field pattern (f0 = 276.156 MHz)

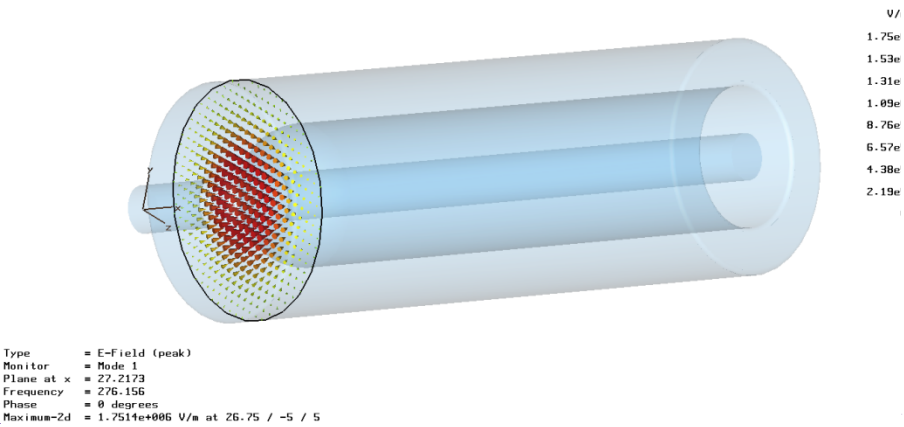

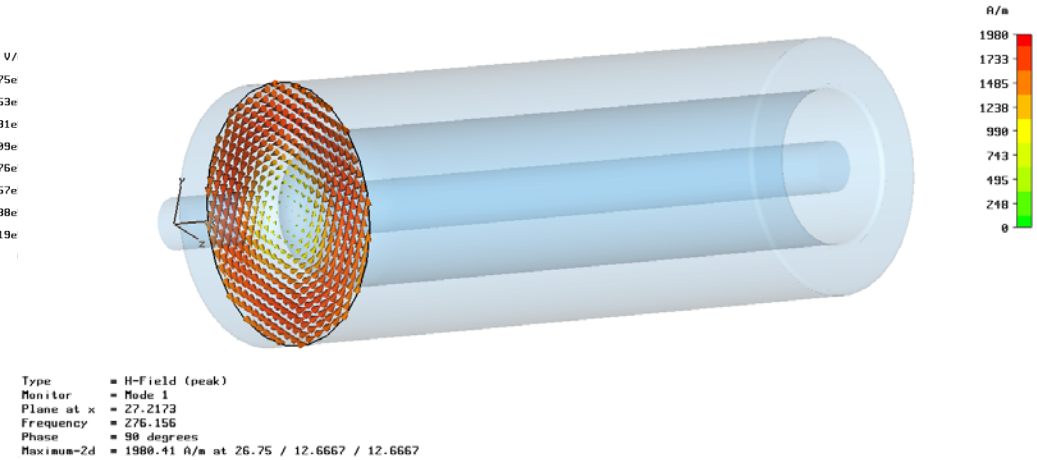

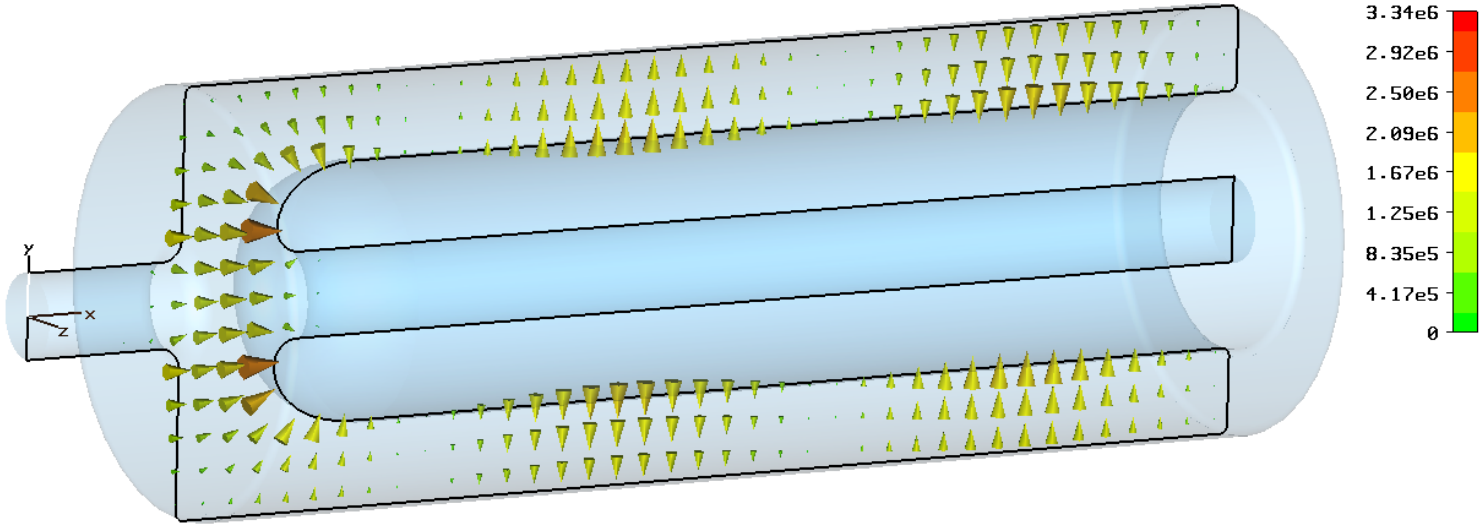

Type = E-Field (peak)
Monitor = Mode 1
Plane at z = 0
Frequency = 276.156
Phase = 0 degrees
Maximum-2d = 3.33852e+006 V/m at 32.5 / 10.3333 / -3.06152e-015

Field pattern (f0 = 1105.129 MHz)

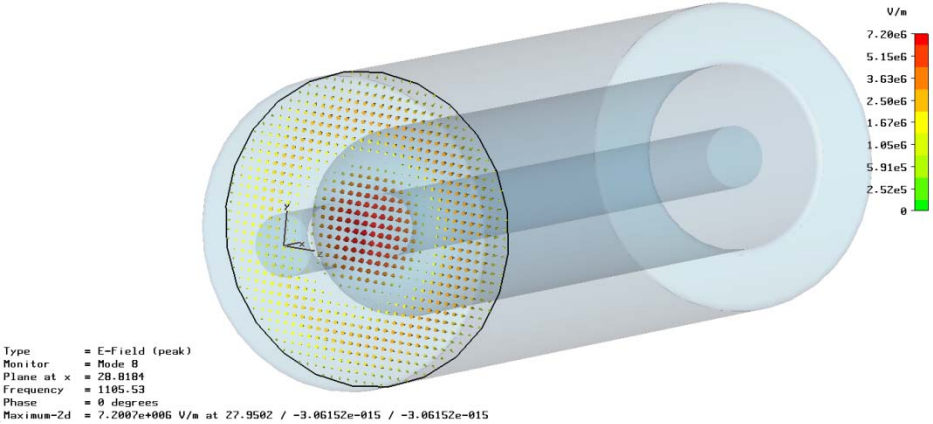

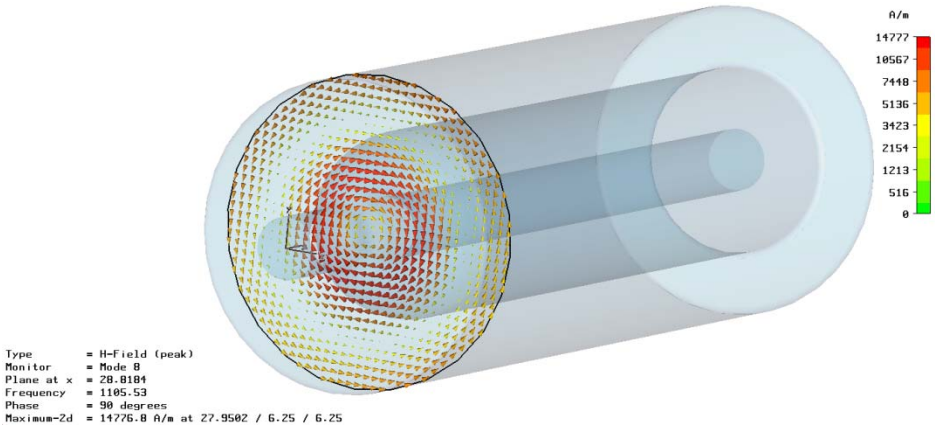

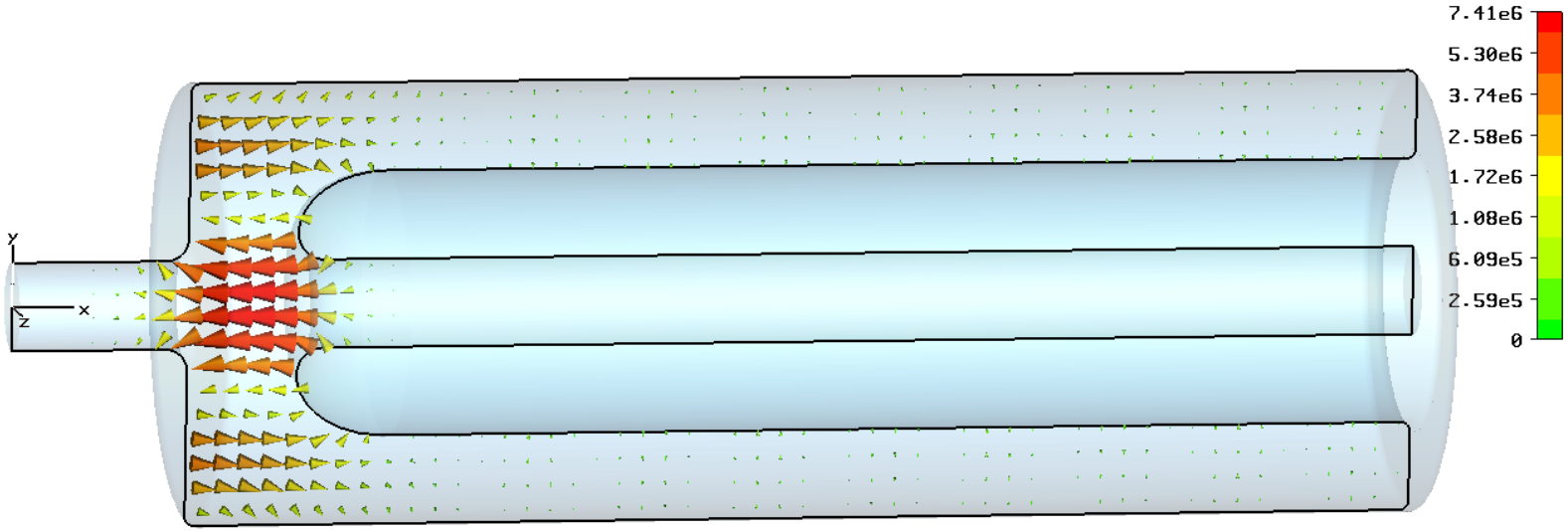

Type = E-Field (peak)
Monitor = Mode 8
Plane at z = 0
Frequency = 1105.53
Phase = 0 degrees
Maximum-2d = 7.41152e+006 V/m at 27.9502 / -3.06152e-015 / -3.06152e-015

HOM Q values

HOM Q values at transition (F damper inserted)

Monopoles

F0 [MHz]	Q
56	~300
167	~2000
276	~120
377	~70
468	~7000
560	~2700
657	~4800

- The instability (both transition and storage) analysis gives Q for 167 MHz (details in Nathan's talk).
- By having roughly the half of the size for a HOM damper as F damper, Q for 167 MHz can be around 1200 which can meet the instability threshold calculated by Nathan.

HOM damper design

- A HOM damper(suppressor) will be in both injection and storage.
- Preliminarily, we are looking at a conventional loop coupler.
- For simplicity of a circuit, a high pass filter is considered.

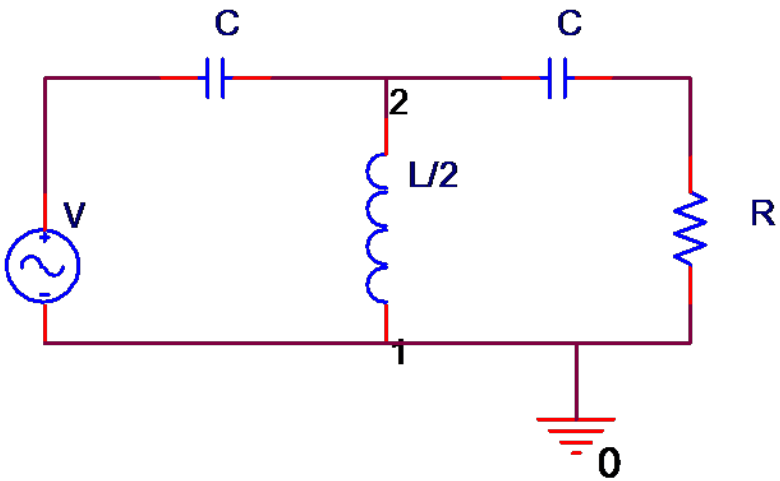

$$\omega_{crit}^2 = \frac{1}{LC}, \quad C = \frac{1}{R\omega_{crit}}, \quad L = \frac{R}{\omega_{crit}}$$

Assume critical frequency is 100 MHz and R=50 Ohm.

$$C = \frac{1}{R\omega_{crit}} = \frac{1}{50*2*pi*100*10^6} \approx 32\,pF$$

$$L = \frac{50}{2*pi*100*10^6} \approx 80nH$$

Using Chebyshev filter, we will have a sharp edge of high pass filter.

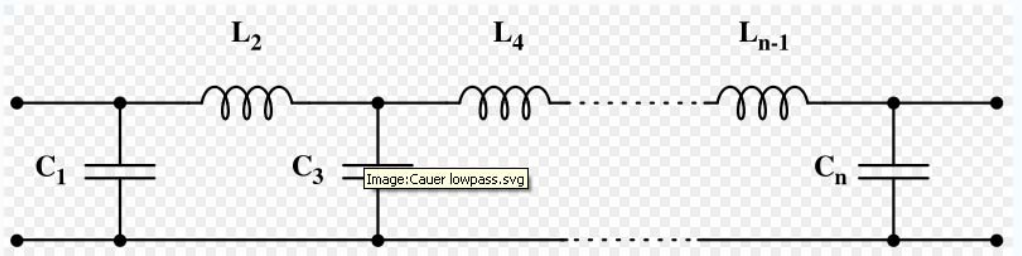

HOM damper design

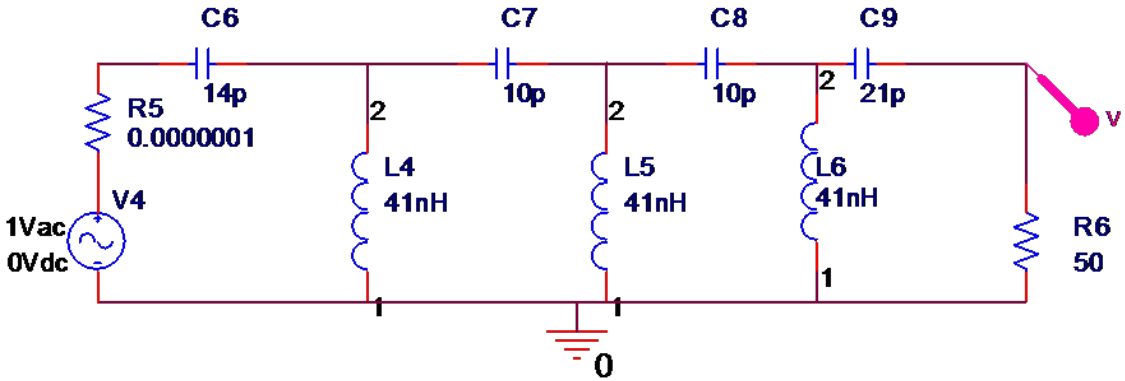

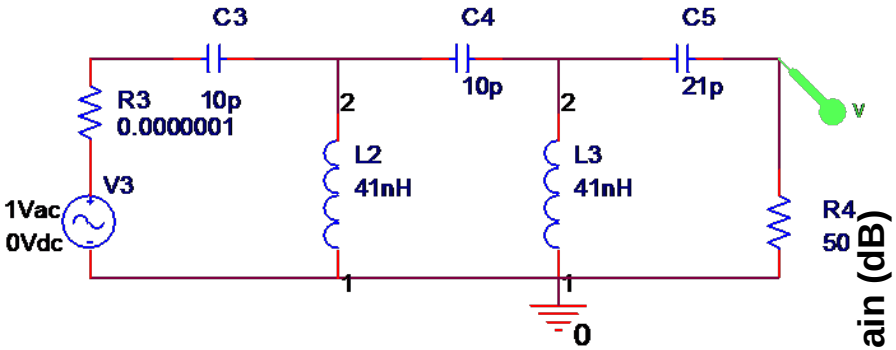

- 5 element high pass filter: -58 dB @ 56 MHz
- 7 element high pass filter: -80 dB @ 56 MHz

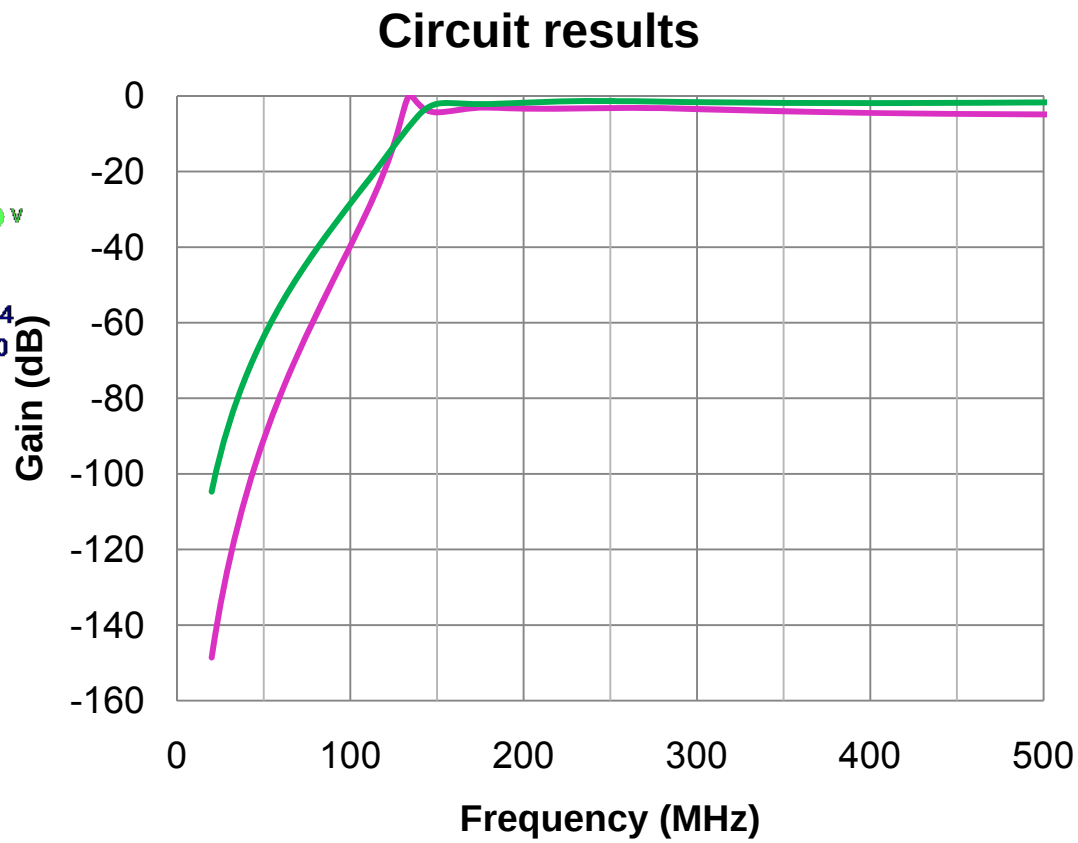

Test plan - Prototype

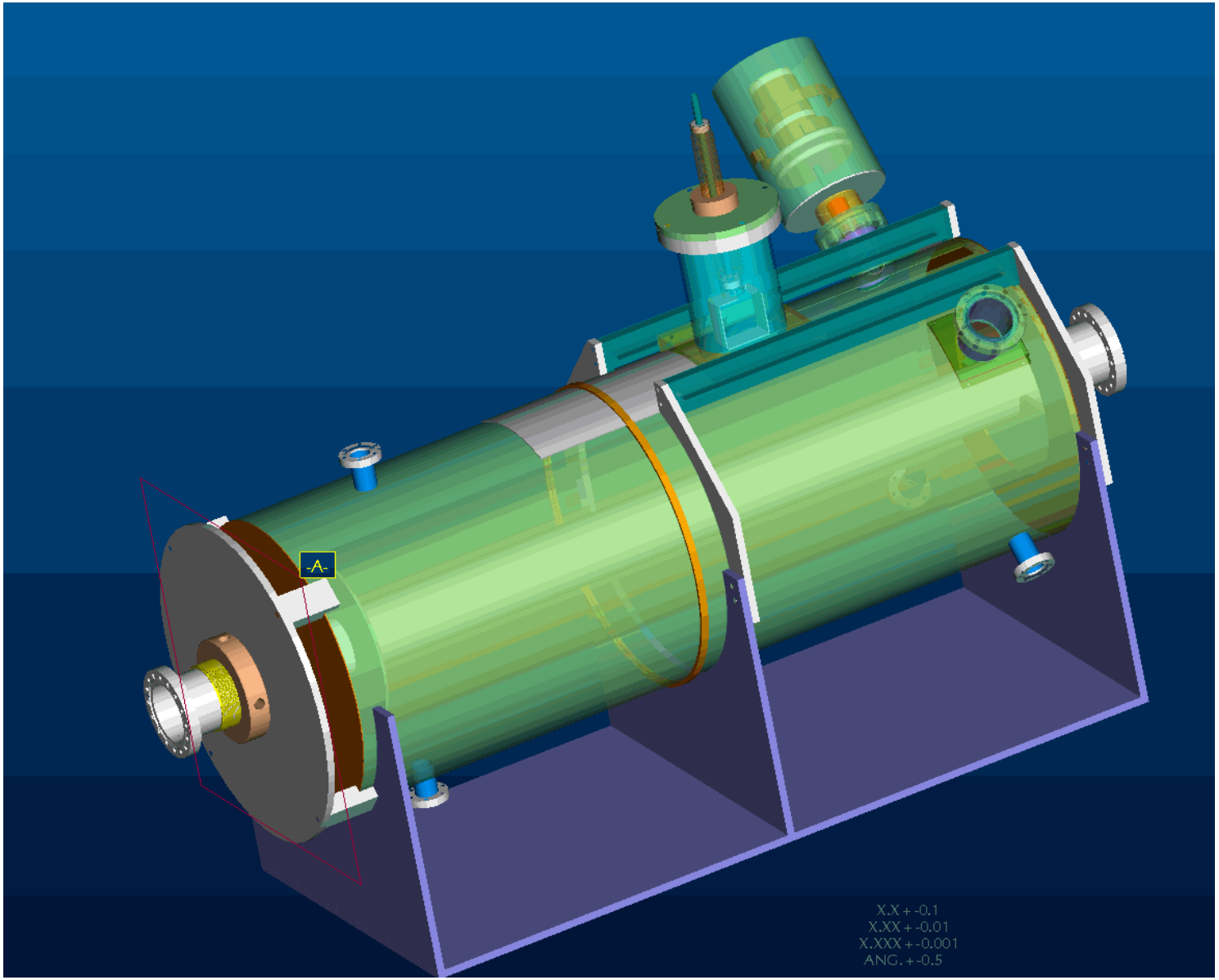

Test plan - Prototype

Fundamental mode damper

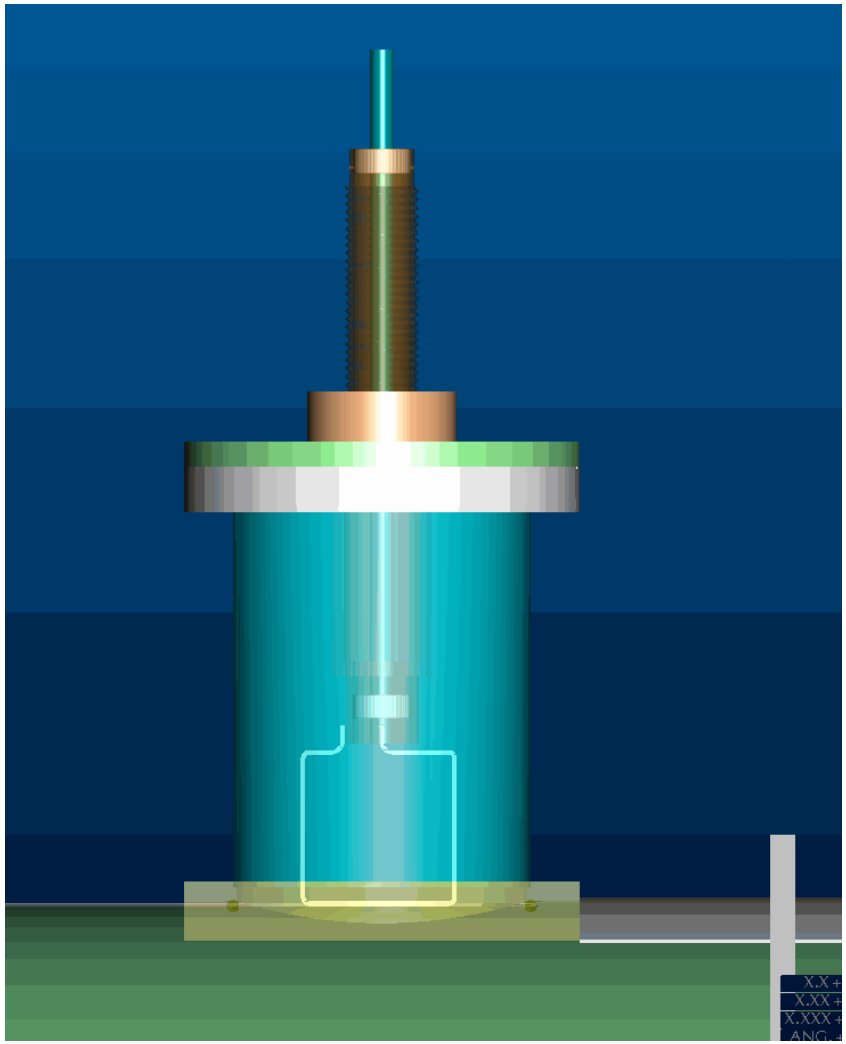

HOM damper

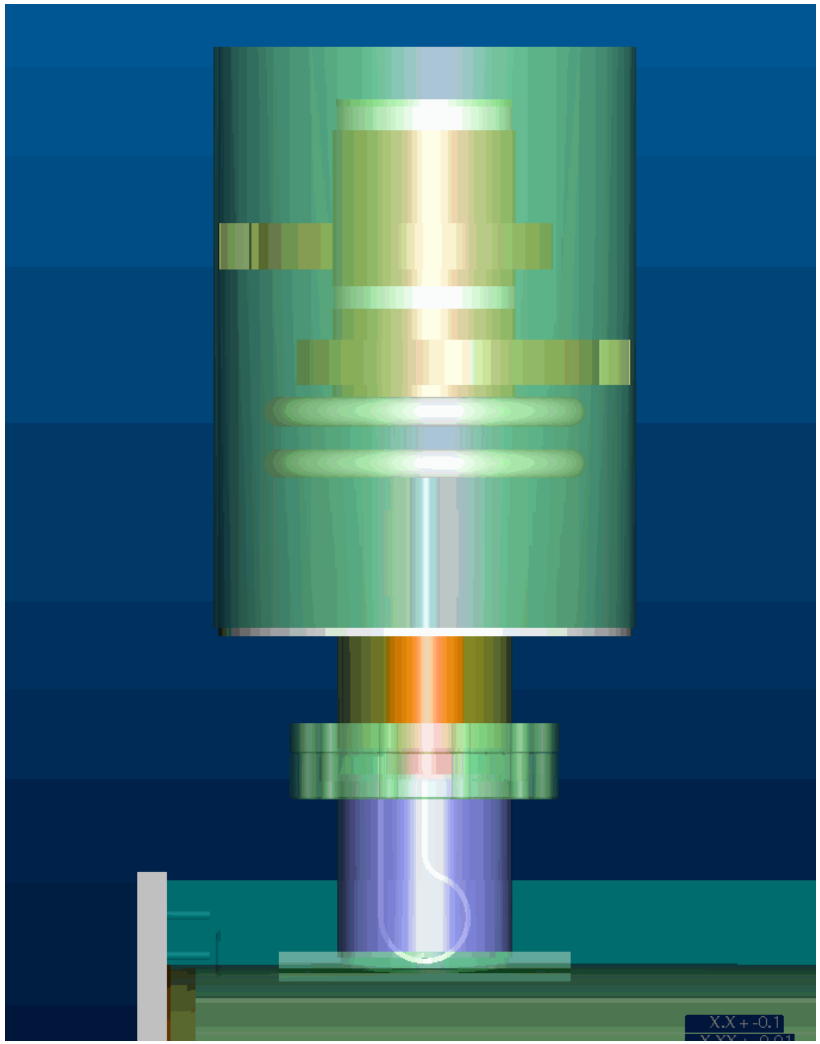

Conclusions

Fundamental mode damper:

- ❑ Q_L of 300 can be obtained in a fundamental damper both from analytic results and from microwave studio results.
- ❑ A parameter study shows that Robinson instability point can be avoided by choosing a proper damper geometry and position delicately.
- ❑ Final damper size is 8cm x 8cm, width=4 cm.
- ❑ Dissipated power is calculated analytically under consideration of delta changes as the damper is pulled out. Maximum 1.2 kW of power will be dissipated through the damper. Power resistors are available at the power range.

HOMs:

- ❑ HOM damper is required during both ramp-up and storage.
- ❑ An unexpected high frequency mode (1105.129 MHz) with a high R/Q may need an additional damper.
- ❑ HOM damper study is underway.

Future work

- ❑ More study on the HOM damper based on the numbers from instability.
- ❑ A copper prototype will be tested soon.
- ❑ More study on the consideration of SC version of the 56 MHz cavity: thermal transition, cooling, and etc.