# RHIC SRF Storage Cavity

Presented on behalf of the
SRF and Electron Cooling Group
Ilan Ben-Zvi
C-AD MAC
February 2008

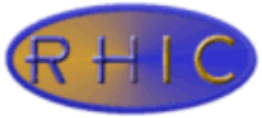


BROOKHAVEN
NATIONAL LABORATORY

# Motivation

- Large voltage at minimal power (2.5 MV) at a low frequency, conservatively from single cavity
- Huge bucket –
  - Adiabatic rebucketing from 28 MHz cavity
  - Keeps ions in one bucket - reduce spill and background
- SRF cavities are stable
- Improve vacuum in RF sector (pressure rise)
- Somewhat lower RHIC impedance (fewer cavities)

# Stochastic Cooling with and without the 56 MHz cavity

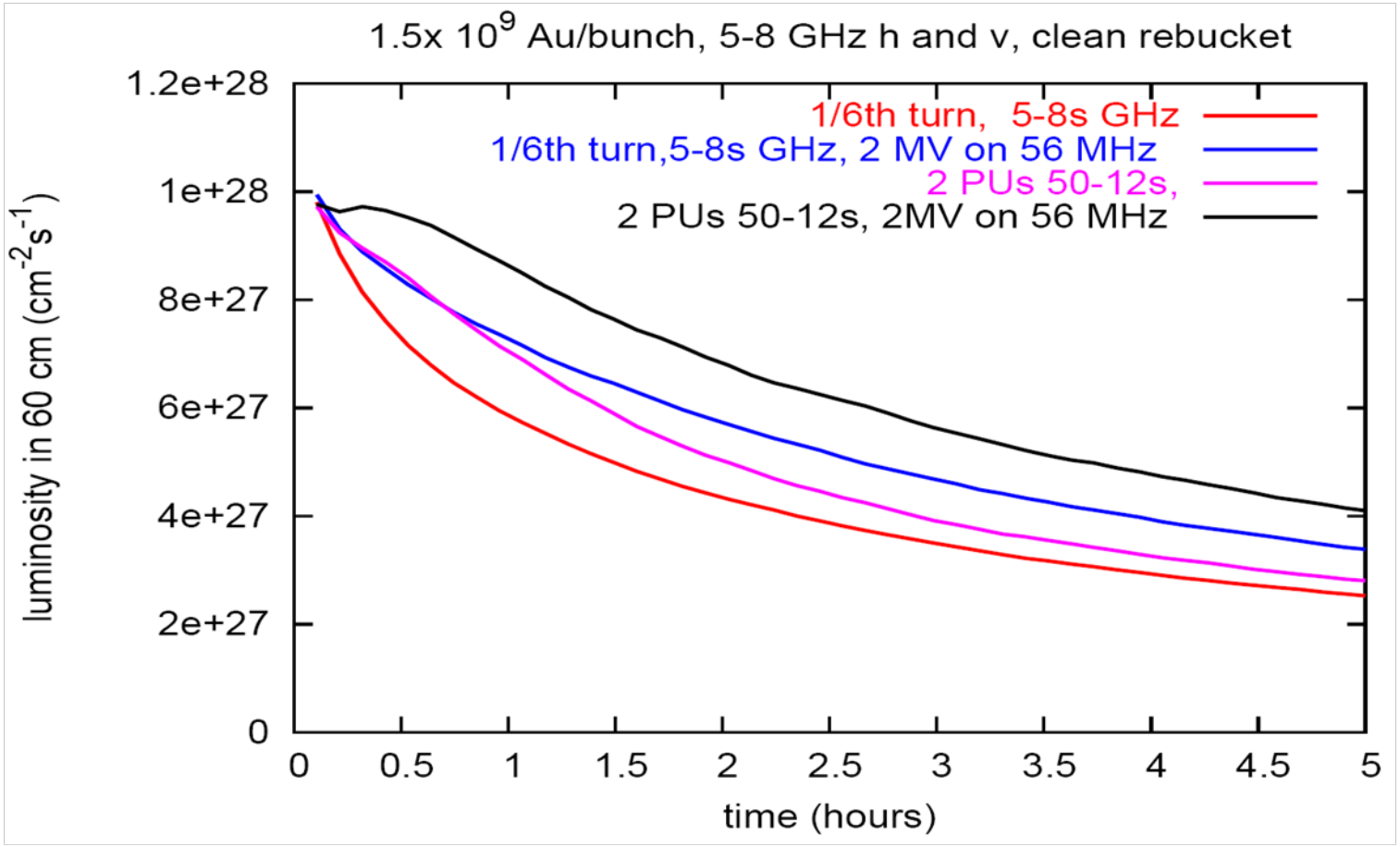


Courtesy Mike Blaskiewicz

Assume
Emittance 0.3 eV sec/A gold
Emittance 0.66 eV sec p
Momentum aperture $2\times10^{-3}$

$$\delta := \sqrt[4]{\mathrm{Inv}^2 \cdot \frac{2\cdot\pi\cdot h\cdot Z\cdot V}{\eta\cdot E^3\cdot C^2}}$$

$$\sigma_s = \sqrt[4]{inv^2 \frac{\eta\cdot C^2\cdot A}{2\pi h_{rf}\cdot eV\cdot Z\cdot E_o}}$$

$$\varepsilon_{\max} = \pm\sqrt{\frac{2eZ\cdot V_{RF}\cdot E_n}{\pi h_{RF}\eta}}$$

| **RF system** | **Protons at 250 GeV** | **Gold at 100 GeV/A** |
|---|---|---|
| 3 MV<br>197 MHz<br>5.1 ns width | Bucket=1.3 eVs/A<br>$\sigma_e$=1.6 x $10^{-3}$<br>$\sigma_t$=1.6 ns | Bucket=0.5 eVs/A<br>$\sigma_e$=1.9 x $10^{-3}$<br>$\sigma_t$=1.8 |
| 2.6 MV*<br>56 MHz<br>17.8 ns width | Bucket=7.9 eVs/A<br>$\sigma_e$ = 1.1 x $10^{-3}$<br>$\sigma_t$ = 2.3 ns | Bucket=3.3 eVs/A<br>$\sigma_e$= 1.2 x $10^{-3}$<br>$\sigma_t$= 2.4 ns |

* With two resonators per ring (avoid single point failure) we actually get 5 to 6 MV

RHIC

BROOKHAVEN NATIONAL LABORATORY

# Adiabatic rebucketing with 197 MHz cavities

# $V_{28MHz}$= 0.3MV; $V_{SRF}$= OFF; $V_{197MHz}$= 2 MV

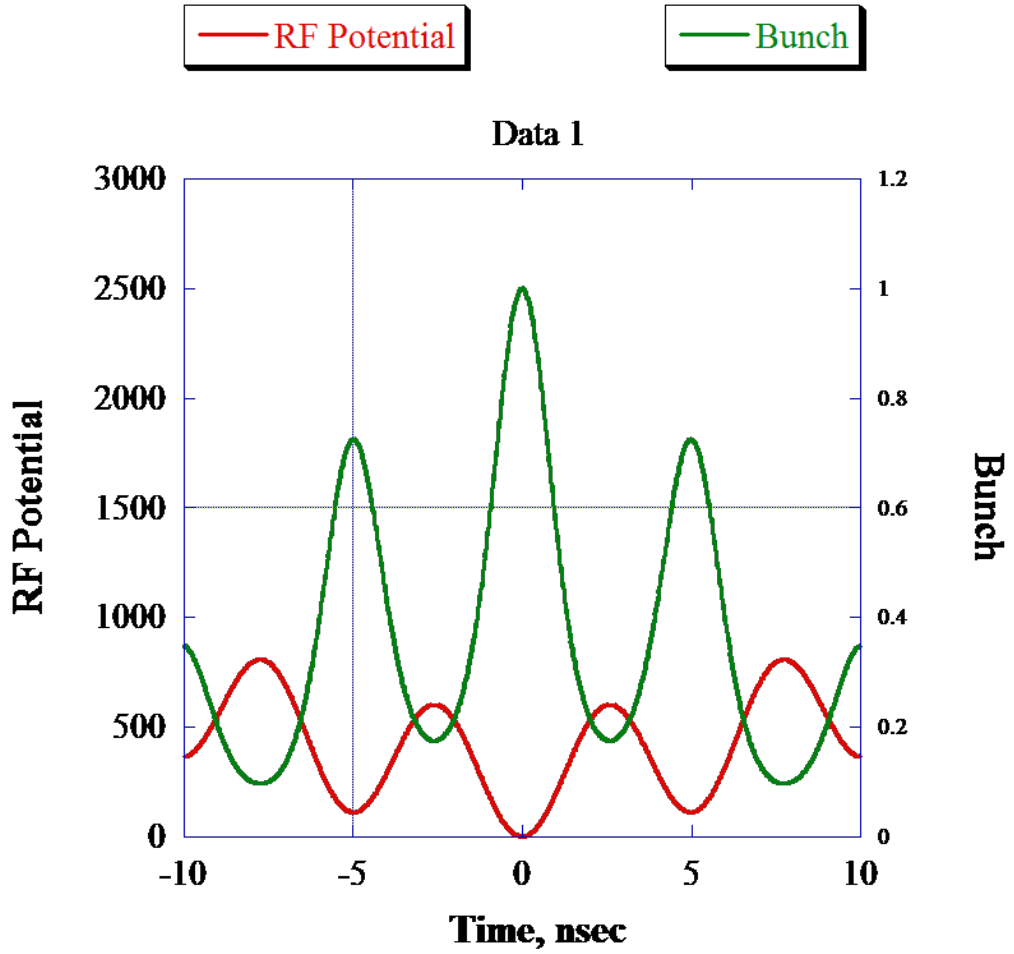


Courtesy Vladimir Litvinenko

RHIC

BROOKHAVEN NATIONAL LABORATORY

# Re-bucketing: $V_{28MHz}$ is 300 kV

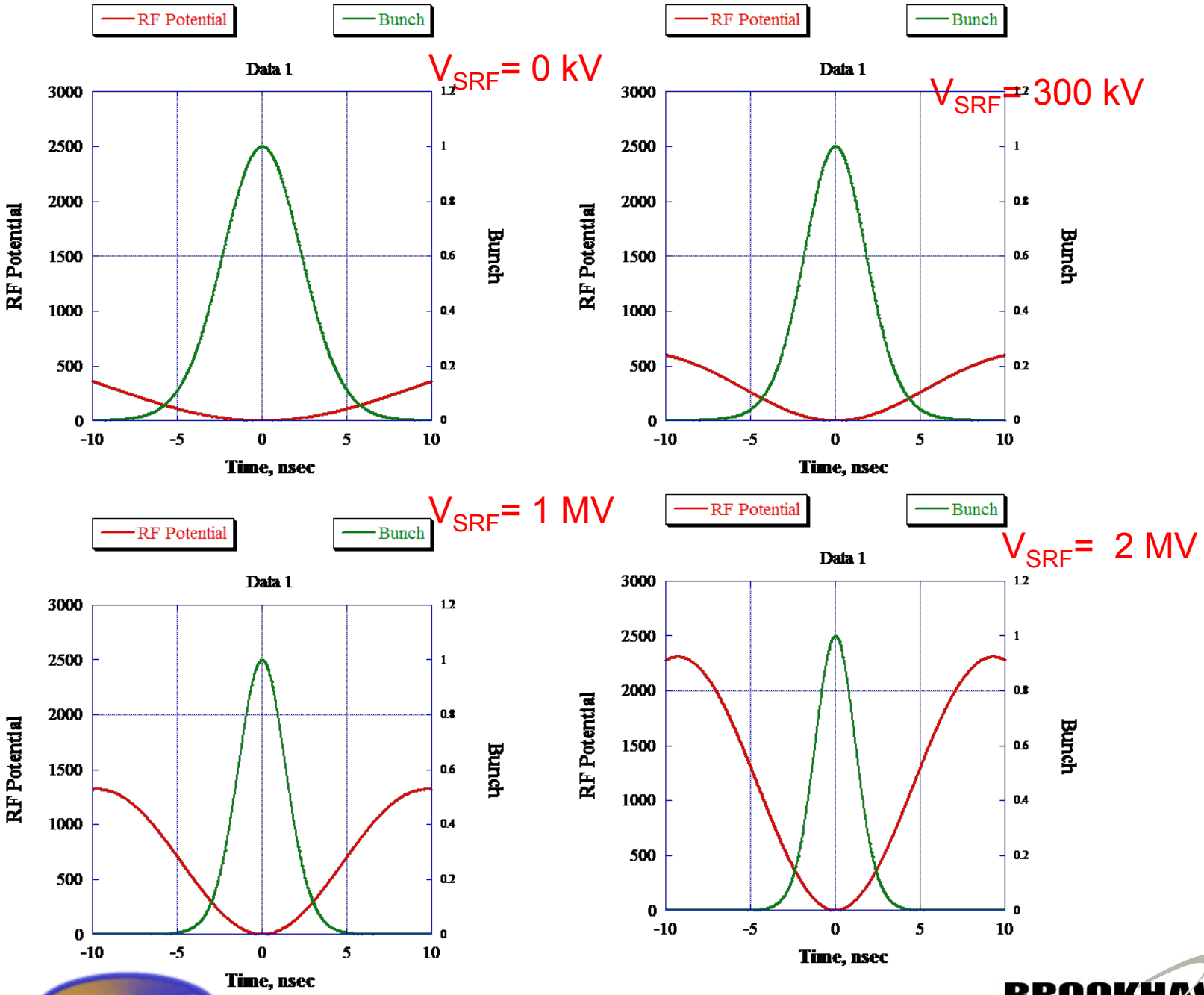


Courtesy Vladimir Litvinenko

RHIC

BROOKHAVEN NATIONAL LABORATORY

# We decided to use a QWR

## Superfish runs by Xiangyun Chang

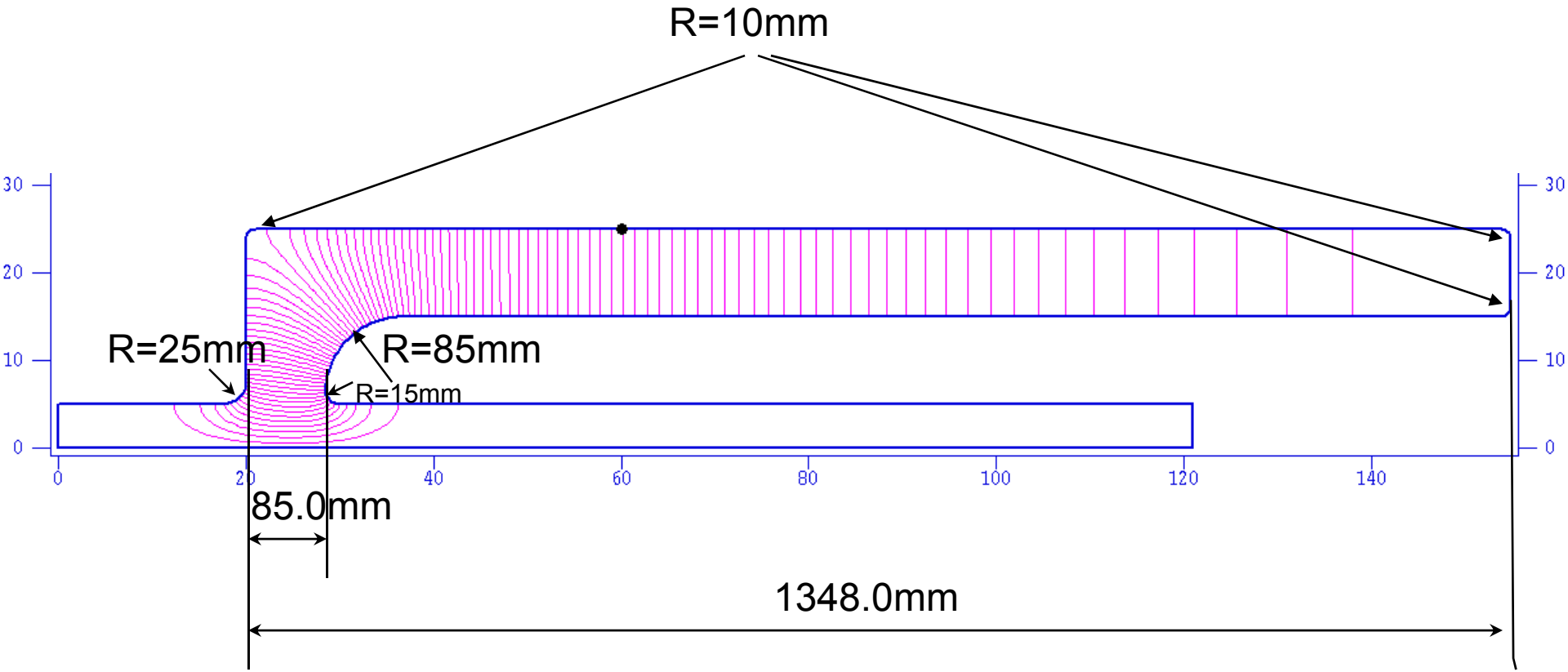

# SUPERFISH results at V=2.5MV

| | |
|---|---|
| Frequency | = 56.27 MHz |
| Stored energy | = 220 Joules |
| Operating temperature | = 4.2 K |
| Power dissipation | = 41.6 W |
| Q (assuming 11 nOhm residual) | = 0.19E+10 |
| Rs*Q | = 21 Ohm |
| r/Q | = 51 Ohm |
| Wake loss parameter | = 0.0045 V/pC |
| Maximum H (at Z,R = 153.8,15.0) | = 85 kA/m (1073G) |
| Maximum E (at Z,R = 28.5,6.5) | = 42.5 MV/m |
| Tuning sensitivity | = 15.8k Hz/mm |

RHIC

BROOKHAVEN NATIONAL LABORATORY

# Niobium 80 MHz QWRs are well known

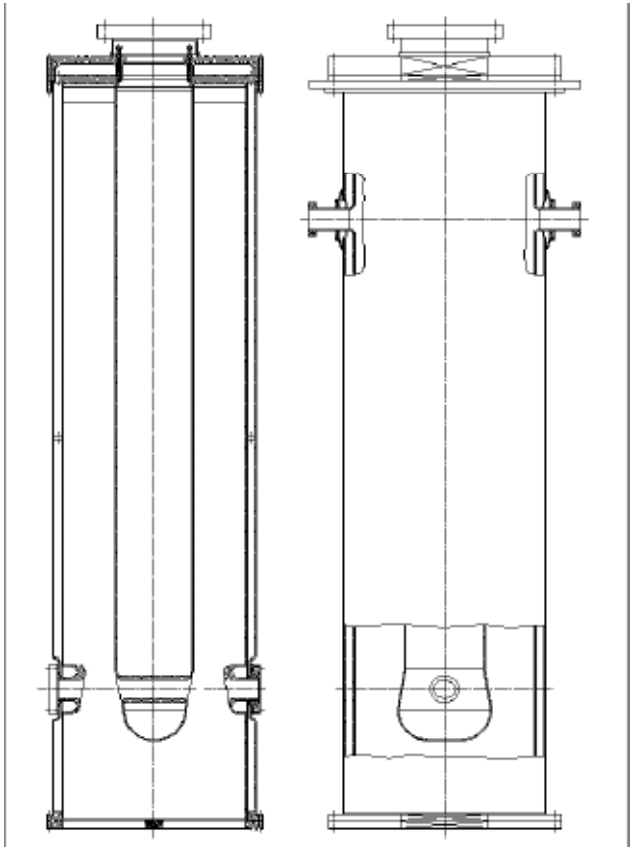

RIA / MSU

Legnaro

# We considered also 85 MHz

- Assume protons with a longitudinal invariant of 0.5 eV*s accelerated in a 9.4 MHz cavity with 20 kV. The matched bunch length here is 11.4 ns whereas the 85 MHz period is 11.8 ns – too marginal.
- For the 56 MHz, the period is a more comfortable 17.7 ns.
- Since the bunch length varies with the $4^{th}$ root of the gap voltage, this conclusion is not very sensitive to the voltage assumed in the 9.4 MHz cavity.

RHIC

BROOKHAVEN NATIONAL LABORATORY

# Stability conditions (no feedback)

- Need to keep cavity's resonance frequency is bellow the RF frequency (above transition).
- The beam changes frequency too much for tracking it with the cavity.
- This requires to heavily damp the cavity fundamental as the beam is accelerated.
- Much more about damping in **Eunmi Choi**'s presentation
- Much more about stability in **Nathan Towne**'s presentation.

# Equivalent circuit

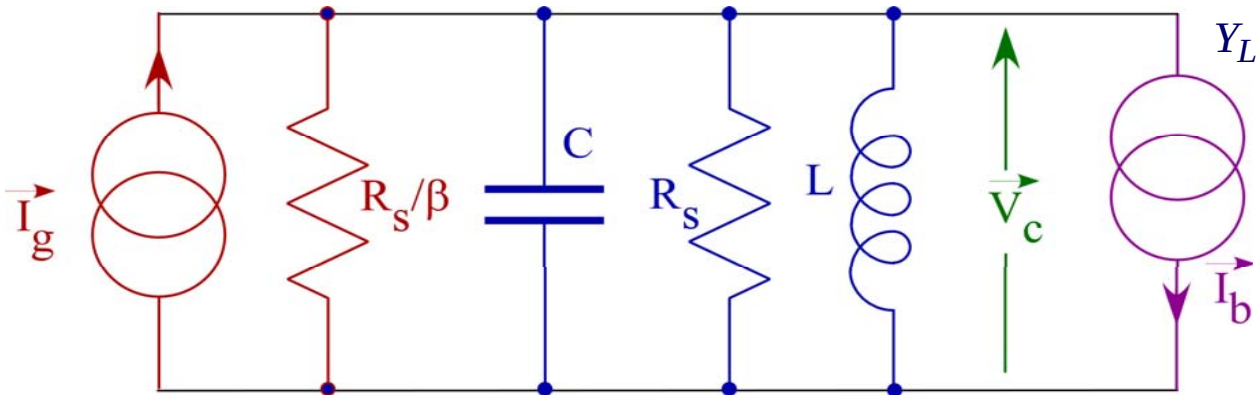


$$Y_L = \frac{\vec{I}_T}{\vec{V}_c} = \frac{1+\beta}{R_L} + j\left(\omega C - \frac{1}{\omega L}\right)$$

$$I_g = \frac{2V_{FWD}}{nZ_0} = \sqrt{\frac{8\beta P_{FWD}}{R_s}}$$

$$I_b \approx \frac{2q}{T_b}; \quad \phi_b = \phi_s$$

$$L = \frac{R/Q}{\omega}$$

$$C = \frac{1}{\omega R/Q}$$

$$P_{fwd} = \frac{(1+\beta)^2}{8R\beta}V^2$$

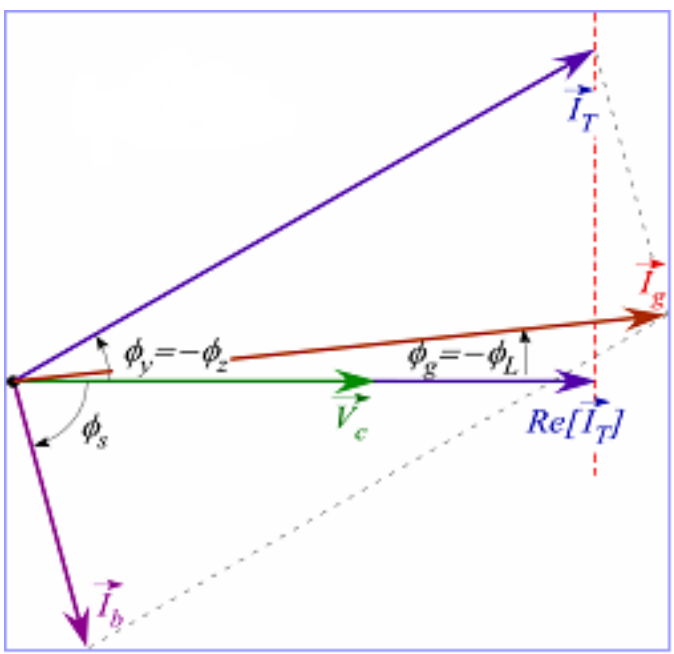


Stationary bucket:
$\phi_s = \pi/2$.
For stability:
$\eta > 0$ ► $\omega_r < \omega_b$

Cavity is capacitive for beam

# From the equivalent circuit:

$$\frac{V\delta}{R/Q} = -I_B \sin(\phi_s); \quad \delta \sim 2\frac{\Delta f}{f} \qquad \phi_s = -\frac{\pi}{2}$$

$$V = \frac{R}{Q}\frac{I_B}{\delta}$$

For example, $I_B$=0.5A, V=2.5 MV, R/Q=50
Then $\delta$=10x10$^{-6}$, $\Delta$f/f=5x10$^{-6}$, $\Delta$f=280 Hz

RHIC

BROOKHAVEN NATIONAL LABORATORY

# Multipacting

Damayanti Naik

- 25 kV/m order “1.5”
- 37 kV/m 1st order
- “Walking” trajectories, but large enhancement
- Possibly a problem, changes to the geometry may be required.

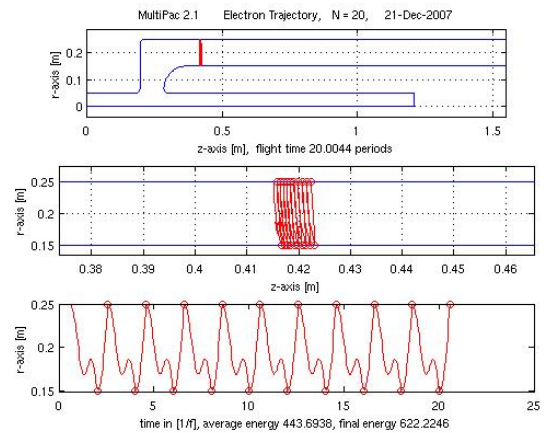


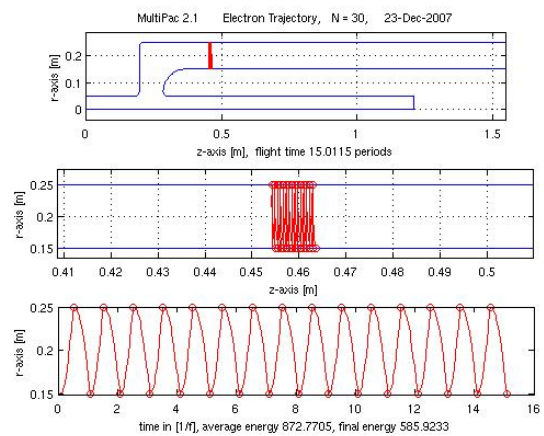

# Prototype Cu Cavity

Daniel Chenet

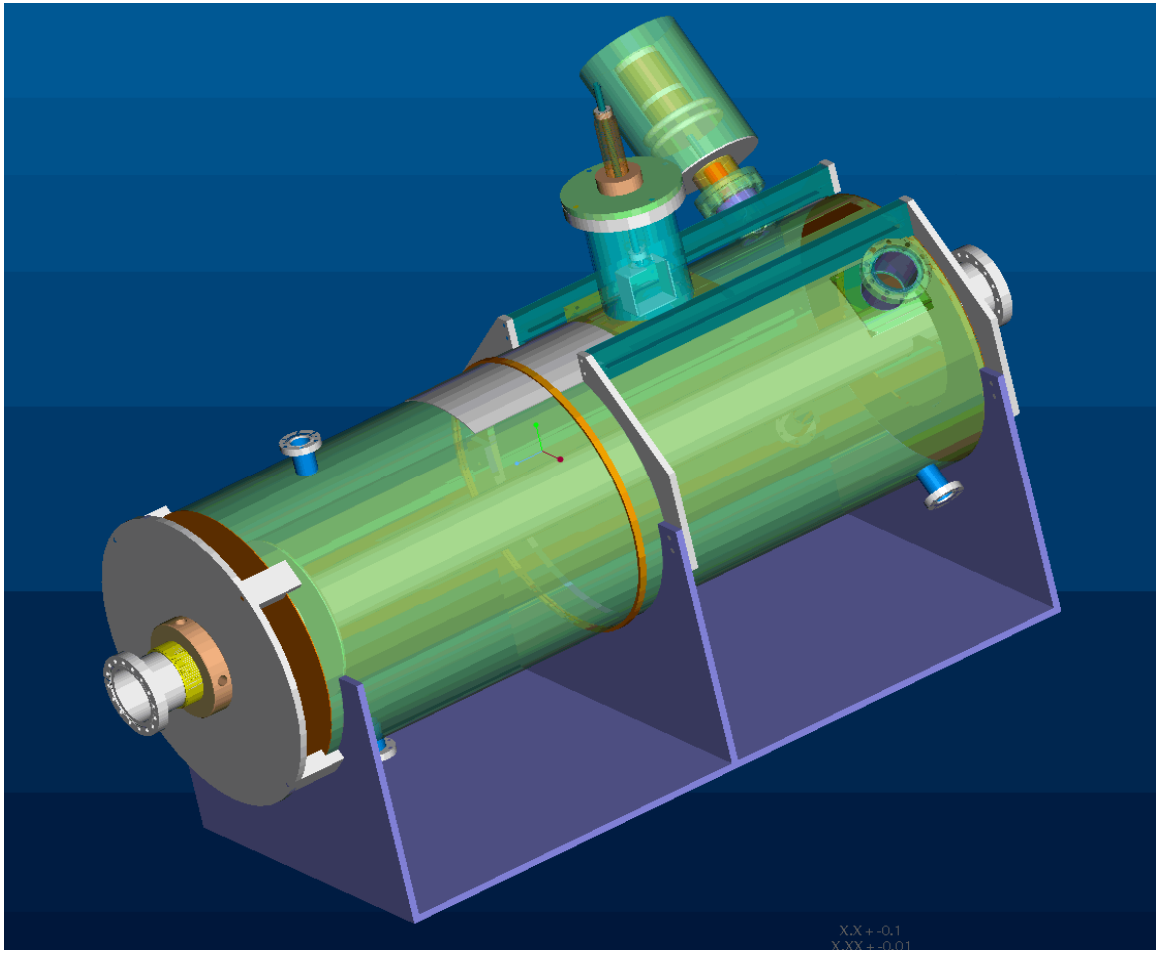

**Fabricated:**

Inner and outer conductors
Beam tube
Stand
Rail system for damper
End plates
Flanges

**Yet to be fabricated:**

Fundamental damper
HOM dampers

RHIC

BROOKHAVEN NATIONAL LABORATORY

# Prototype Cu Cavity

Inner conductor (left)

Outer conductor (right)

# Production Nb Cavity

Daniel Chenet, Roberto Than

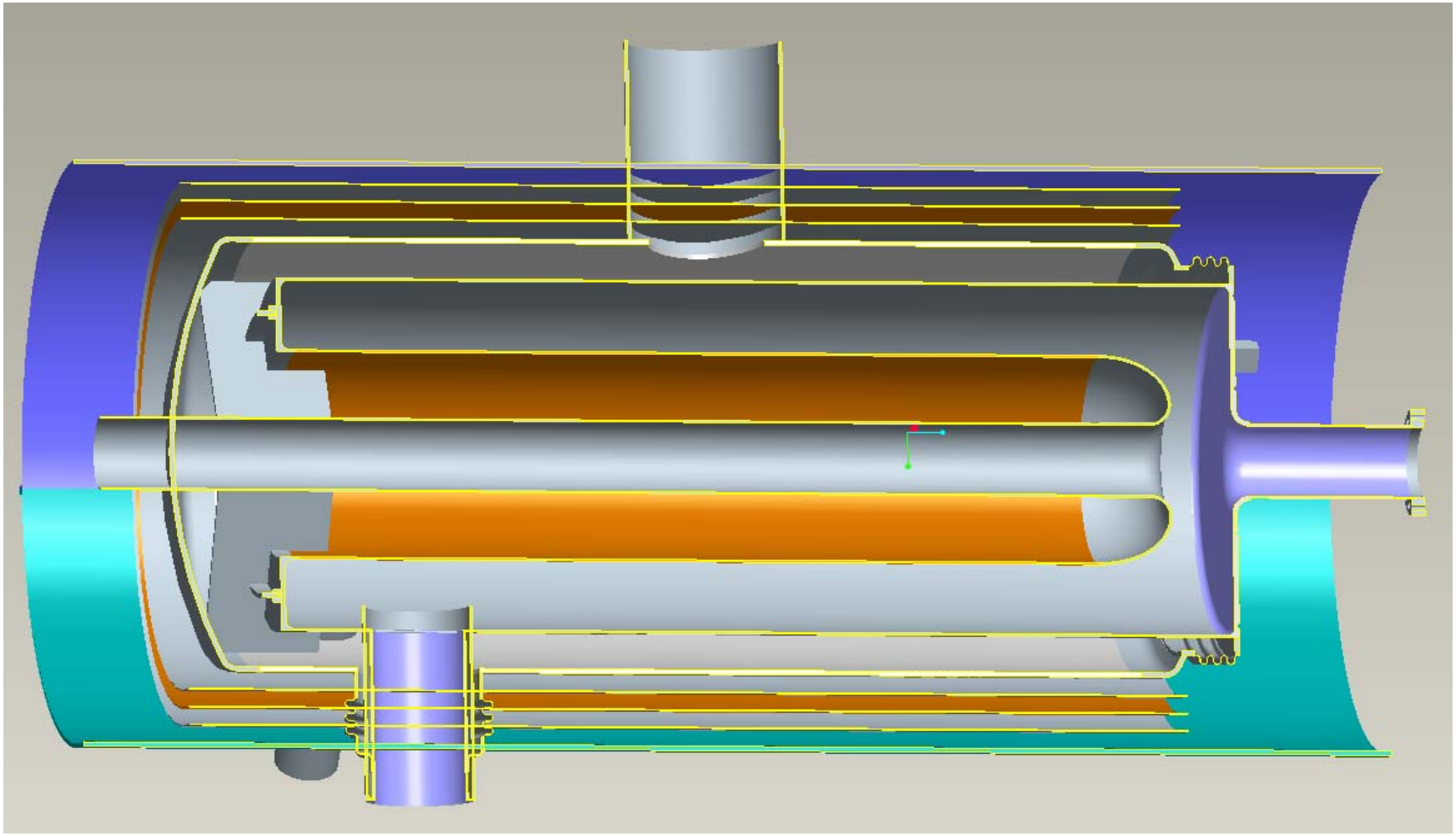

RHIC

BROOKHAVEN NATIONAL LABORATORY

# Mechanical Vibrations (1st mode @70.69 Hz)

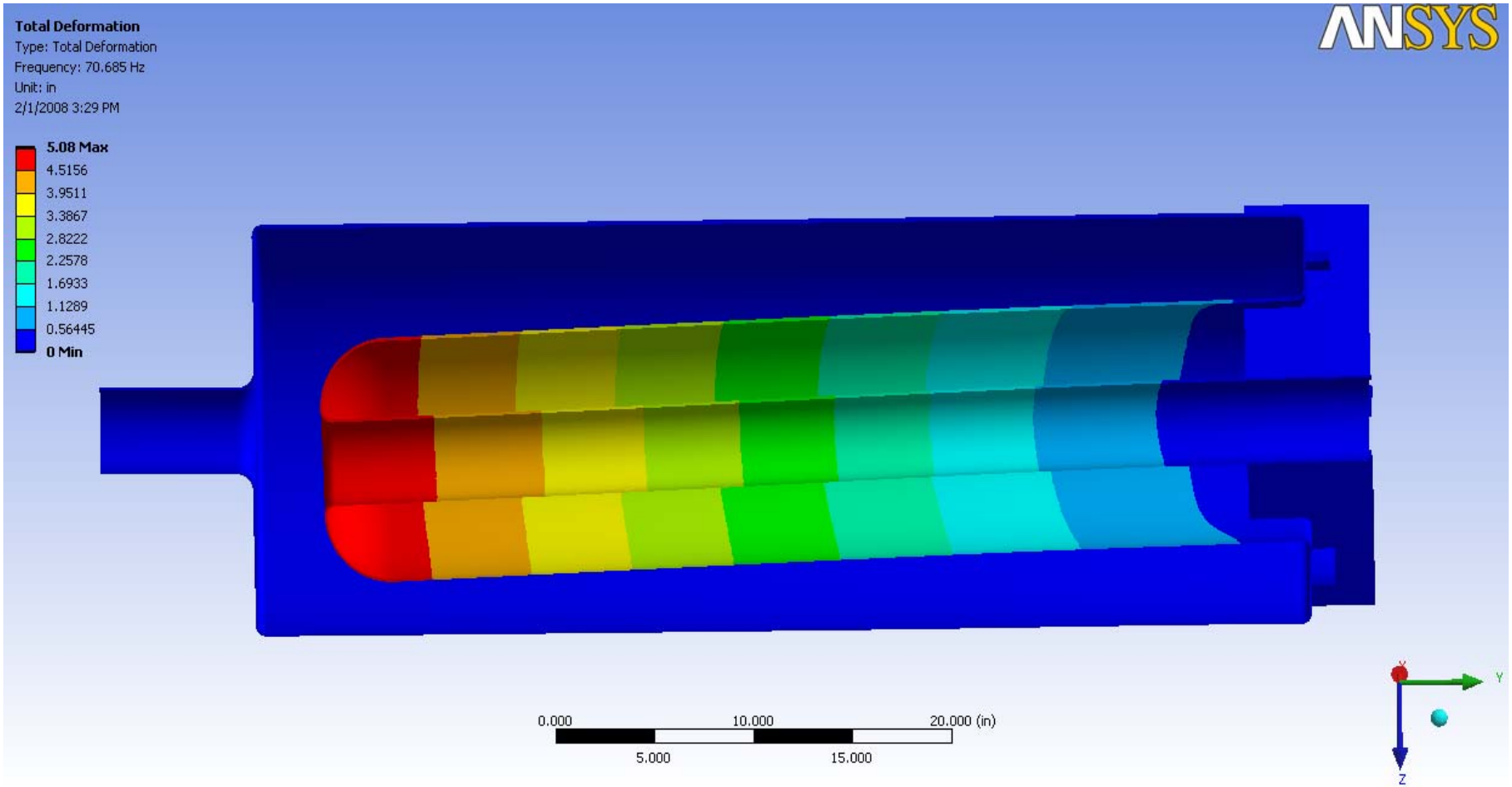

# Mechanical Vibrations (2nd mode at 111.77 Hz)

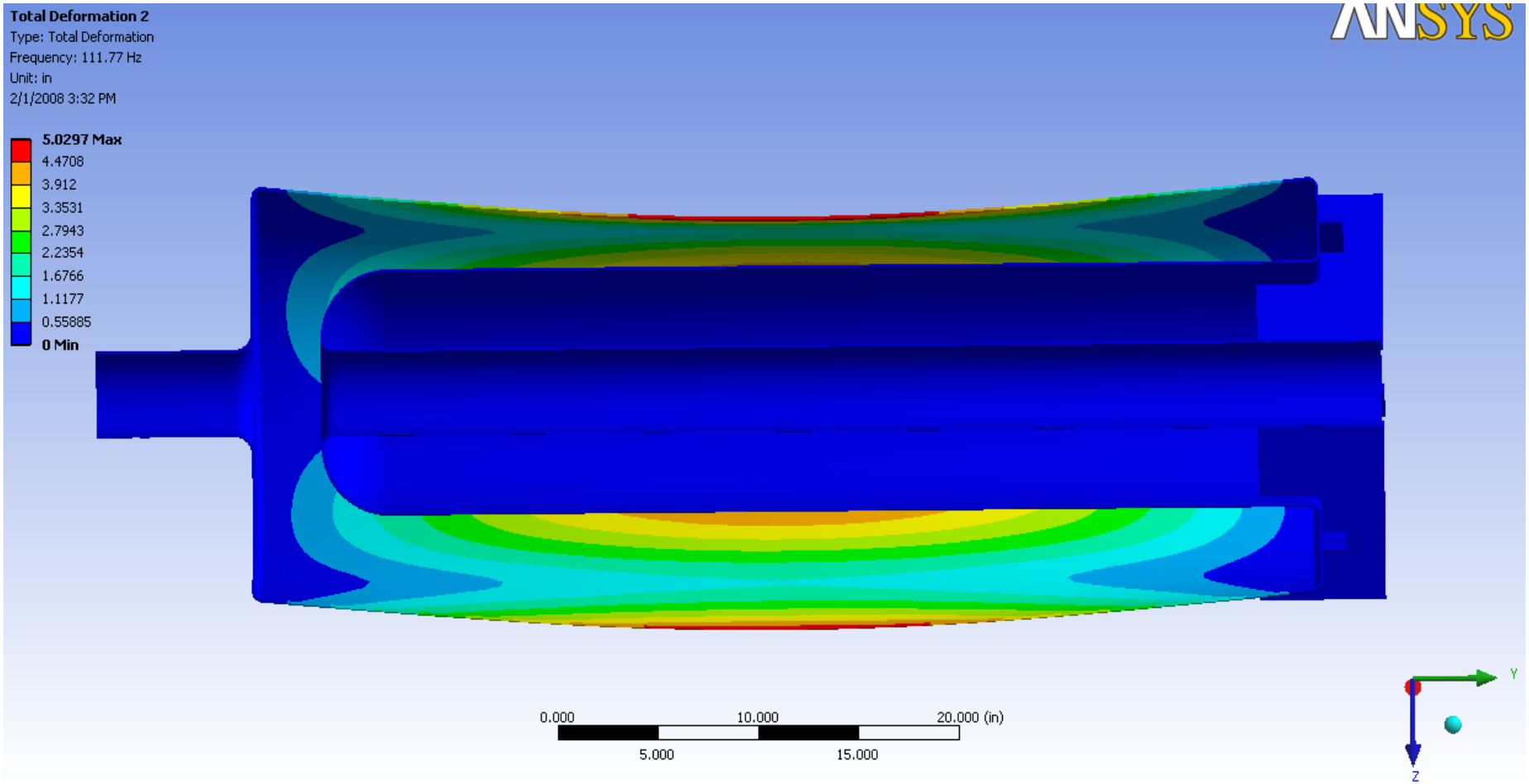

# Sensitivity to Pressure Fluctuations

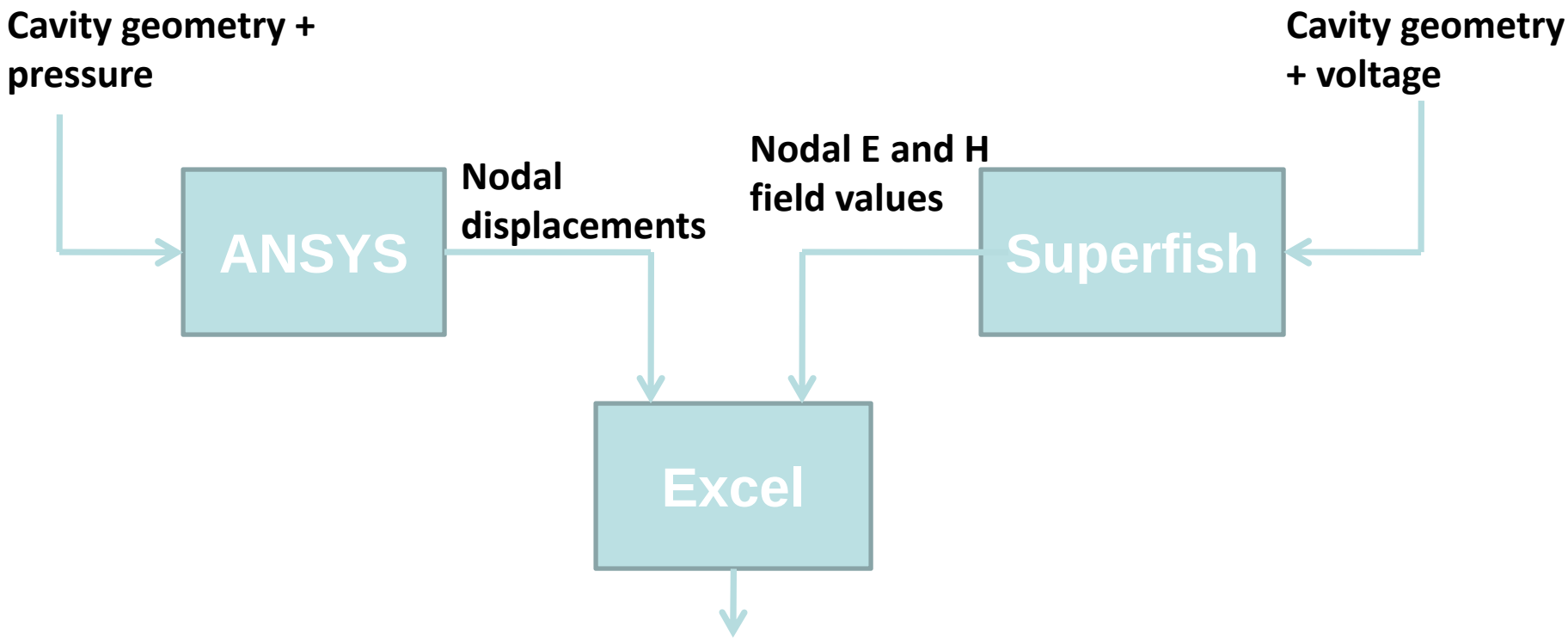


**$\Delta f / \Delta p$ = -3.72 Hz/mbar**

***Future work will be to "selectively stiffen" the cavity to reduce this sensitivity using an ANSYS coupled mechanical/electromagnetic analysis.**

RHIC

BROOKHAVEN NATIONAL LABORATORY

# Vibration Testing

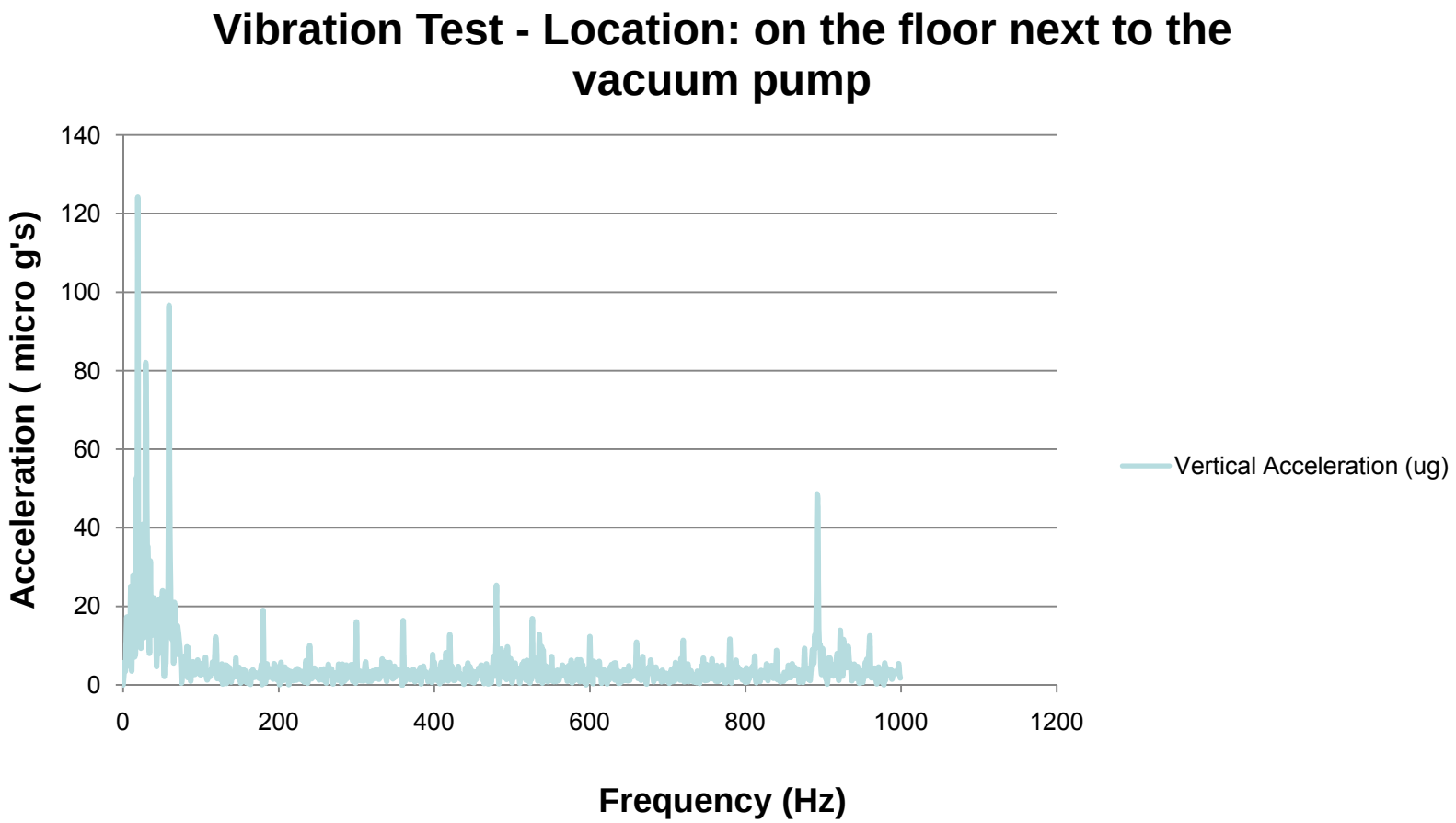


Vibration Testing was done on 1/16/08 by D. Chenet and R. Bonati

Measurements were taken at several locations on both beams and on the ground in all 3 axes

# Slow tuner
## Chien Pai

- DC motor1000 step / rev encoder plus 1:100 harmonic drive reduction.
- ACME screw (self locking) and double mechanical levers.
- Fine resolution of 0.0164 Hz/step
- Tuning range 18 kHz (1 mm), can be covered in 22 seconds at 820 Hz/sec.

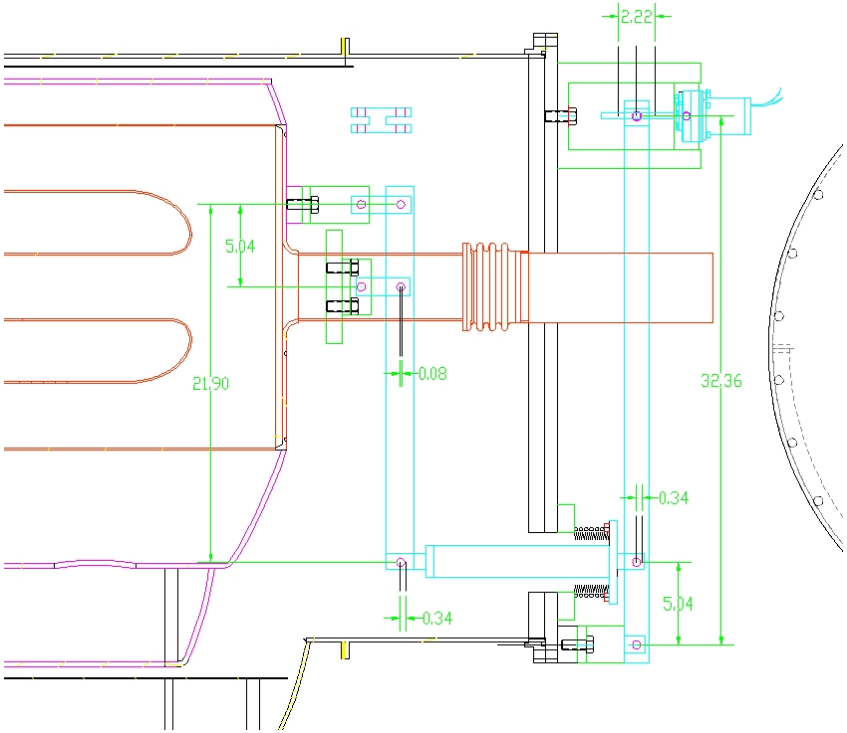


RHIC

BROOKHAVEN NATIONAL LABORATORY

# Conclusions

- A superconducting storage has many advantages for RHIC, including increased luminosity and elimination of satellite bunches.
- We expect to complete the installation of the cavities in RHIC in FY2011.