MODEL **4005**
0-40 VDC • 0-0.5A

MODEL **4005R**
0-40 VDC • 0-0.5A

SEMICONDUCTORIZED
POWER SUPPLY

POWER DESIGNS

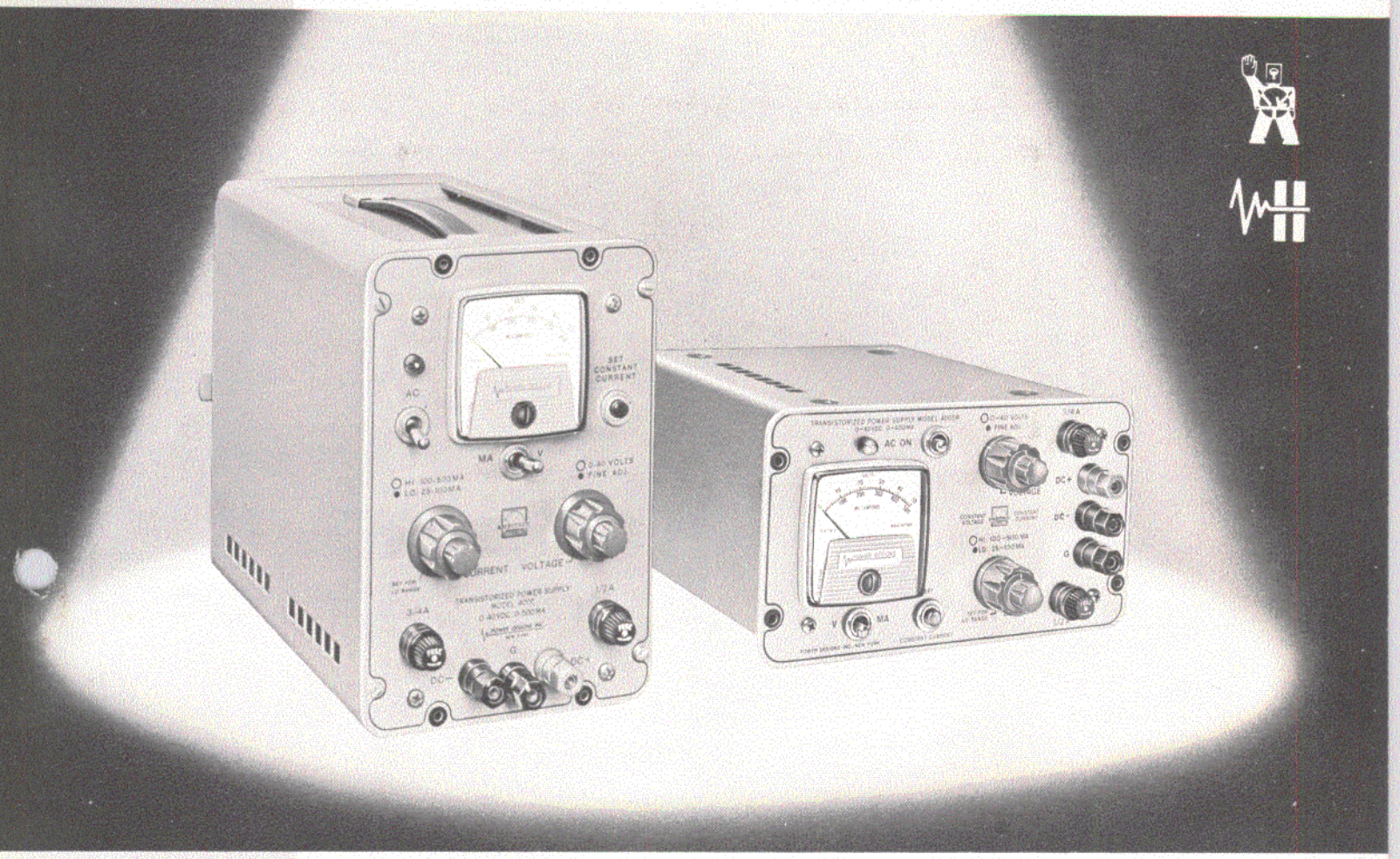

UNIVERSAL CONSTANT VOLTAGE / CURRENT POWER SUPPLY

WITH AMBITROL®

RECOGNIZED RELIABILITY

MODEL 4005 0-40 VDC • 0-0.5A

MODEL 4005R 0-40 VDC • 0-0.5A

Universal DC POWER SUPPLIES WITH AMBITROL®

MODES OF OPERATION:

- Constant Voltage Regulation
- Constant Current Regulation
- Remote Voltage Programming
- Remote Current Programming
- Automatic Transfer from Voltage to Current Regulation at any Operating Point.
- Automatic Transfer from Current to Voltage Regulation at any Operating Point.
- Constant Voltage Regulation with Continuously Adjustable Current Limiting.
- Constant Current Regulation with Continuously Adjustable Voltage Limiting
- Series Operation
- Parallel Operation

APPLICATIONS

- Versatile laboratory power source with controlled regulation from no load to a short circuit.
- Precision automatic battery charger for sealed batteries. Control accuracy of 0.1%.
- Safety power supply for component protection in experimental circuitry.
- Supplementary power source to increase capacity of an external d-c supply. Voltage locks in automatically.
- Automatic Test Set power supply for current limited or voltage limited testing of semiconductor devices.
- Current and Voltage controlled source for electroplating, tantalum capacitor forming and other electro-chemical processes.
- Controlled power source for electrophoresis, microbiological and chemical analysis.

DESIGN FEATURES

- ®AMBITROL Dual amplifier control system permits continuous control of voltage or current with automatic electronic crossover to either mode of operation.
- ®HEATRAN Electronic power transistor dissipation control.
- Performance specifications based on anticipated ratings at end of five years of service life.
- Silicon planar diffused junction input transistors provide high stability.
- Pre-aged transistors with "reliability controlled" parameters for insured long life.
- Avalanche protected Silicon rectifiers to prevent line surge failures.
- Automatic Ico compensation circuit eliminates the possibility of turn-on and turn-off transients.
- Dual concentric controls for coarse and fine voltage or current adjustment.
- Front and rear access output terminals.
- Silicon diode voltage references operating in the zero temperature coefficient region.
- Semiconductor devices derated to 50% of rated voltage and current.
- Volt-ammeter monitors output voltage or current.
- Computer quality electrolytic capacitors.
- Line and load circuits separately fused. Accessible at front panel.
- Fifty hour pre-aging of power supplies prior to test guarantees field service reliability.
- Modular package construction suitable for rack mounting. Single or dual mounting of Model 4005R in 5¼" x 19" panel. Single, dual, or triple mounting in standard 8¾" x 19" panel. See catalogue RPA-62 for rack panel adapters.

ELECTRICAL SPECIFICATIONS

MODEL 4005 & MODEL 4005R

CONSTANT VOLTAGE

RANGE: 0-40 vdc, 0-500 milliamperes, continuously adjustable.

REGULATION: .05% or 10 millivolts max., whichever is greater for line or load variations.

RIPPLE: .0005% or 250 microvolts maximum.

RESPONSE TIME: Less than 50 microseconds for 100% step changes in rated load.

SOURCE IMPEDANCE: 0.1 Ω to 20 kc, 0.7 Ω to 1 mc.

STABILITY: Less than 10 millivolts drift per 24 hours at constant ambient temperature with fixed load and external low temperature coefficient programming resistor.

TEMPERATURE COEFFICIENT: D-C output voltage change less than .02% per degree Centrigrade.

REMOTE PROGRAMMING RESISTANCE: 100 Ω per volt.

VOLTAGE CONTROL: Dual concentric fine and coarse adjustment with five millivolts resolution.

CONSTANT CURRENT

RANGE: 25-500 milliamperes, continuously adjustable.

REGULATION: .02% or 100 microamperes, whichever is greater, for line or load variations down to a short circuit across the output terminals.

VOLTAGE COMPLIANCE: 40 volts maximum.

RIPPLE: Ripple component of the output current less than .005% or 20 microamperes, whichever is greater.

SOURCE IMPEDANCE: 400,000 Ω approx.

STABILITY: Less than 0.1% or 250 microamperes drift per 24 hours at constant ambient temperature with fixed load and low temperature coefficient external programming resistor.

TEMPERATURE COEFFICIENT: D-C output current change less than .08% per degree Centigrade change in ambient.

INPUT: 105-125 VAC 55-440 ~, single φ

OPERATING TEMPERATURE: 0-50°C.

OUTPUT TERMINALS: Front panel binding posts and rear access terminal strip. Either positive or negative output terminal may be grounded.

10M 4-64 PRINTED IN USA

MECHANICAL SPECIFICATIONS

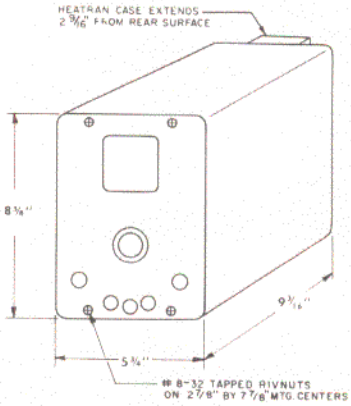

MODEL 4005

WEIGHT: 11½ lbs.

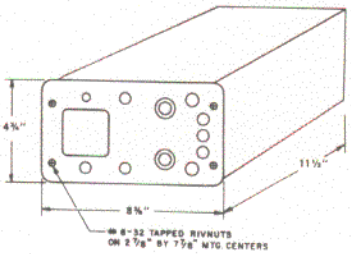

MODEL 4005R

WEIGHT: 9 lbs.

FINISH: Brushed anodized natural aluminum panel with etched black lettering. Cabinet finished in grey wrinkle enamel. Chassis and dust cover, golden irridite.

MODEL 4005 ..... **$143.50** FOB FACTORY

MODEL 4005R ..... **$149.50** FOB FACTORY

POWER DESIGNS INC.
1700 SHAMES DRIVE, WESTBURY, NEW YORK
516 EDgewood 3-6200 TWX: 510-222-6561

POWER DESIGNS PACIFIC, INC.
3381 Junipero Serra, Palo Alto, Calif.
415-321-6111 TWX: 910-373-1251