HOM Damper Mechanical Engineering

S. Bellavia

HOM Input Parameters

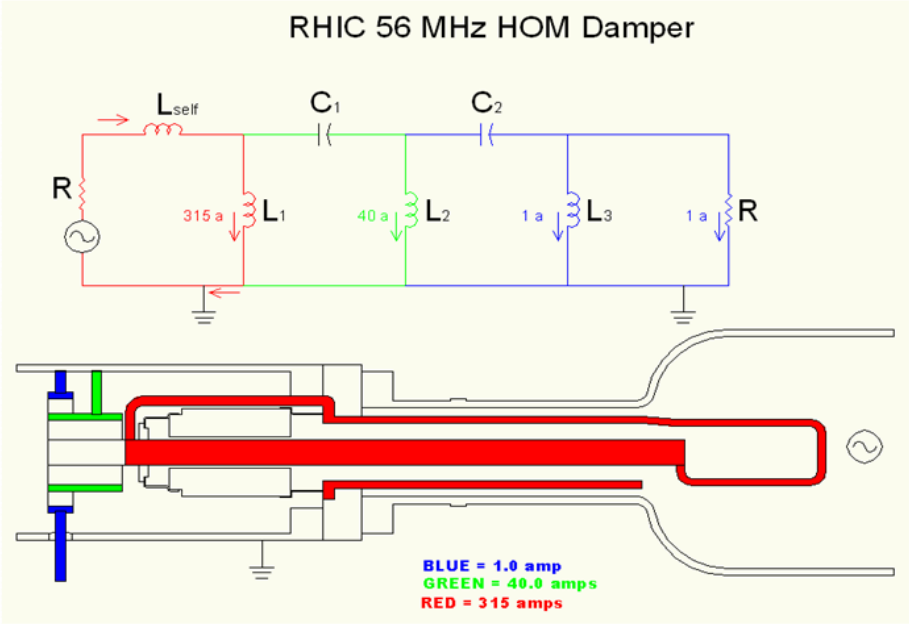

Component	Material	Thermal Conductivity @ 5K	Length	Surface Area	Surface Resisitivity	Total Resistance	Current	Power		Watts /
-	-	W/mm-K	(mm)	(mm2)	Ω	Ω	amps	Watts	mWatts	mm2
Center Conductor	Niobium	0.123	262	4438	1.00E-08	1.547E-07	157.5	3.84E-03	3.8369	8.645E-07
Inductor 1	Niobium	0.123	60	283	1.00E-08	1.273E-07	157.5	3.16E-03	3.1584	1.117E-05
damper_loop	Niobium	0.123	142	2339	1.00E-08	8.667E-08	157.5	2.15E-03	2.1500	9.192E-07
transition	Niobium	0.123	14	210	1.00E-08	9.187E-09	157.5	2.28E-04	0.2279	1.084E-06
outer coax	Niobium	0.123	145	6603	1.00E-08	3.184E-08	157.5	7.90E-04	0.7899	1.196E-07
Upstream Cuff	Copper	13.8								
Vacuum break	Al2O3	1.00E-04								
Downstream Cuff	Copper	13.8								
Dielectric Inner Sleeve	Stainless	3.10E-04	30	1579	1.00E-08	5.700E-09	157.5	1.41E-04	0.1414	8.954E-08
Dielectric Inner	Al2O3	1.00E-04								
Inductor 2	Niobium	0.123	60	283	1.00E-08	1.273E-07	20	5.09E-05	0.0509	1.801E-07
Inductor 3	Niobium	0.123	40	188	1.00E-08	8.488E-08	0.5	2.12E-08	0.0000	1.126E-10
Dielectric Outer sleeve	Stainless	3.10E-04	10	809	1.00E-08	1.236E-09	0.5	3.09E-10	0.0000	3.820E-13
Dielectric Inner	Al2O3	1.00E-04								
SMA Conductor	Niobium	0.123	20	94	1.00E-08	4.244E-08	0.5	1.06E-08	0.0000	1.126E-10
								2.07E-02	20.71	

Thermal Analysis of the HOM Damper requires the heat loads and boundary conditions.

Surface resistivity and the total current in each loop were provided.

The resulting heat load (power) was calculated for each component as a function of surface area and length. (derived from the solid model).

This data was then used as input into an FEA thermal model.

HOM Solid Model Design

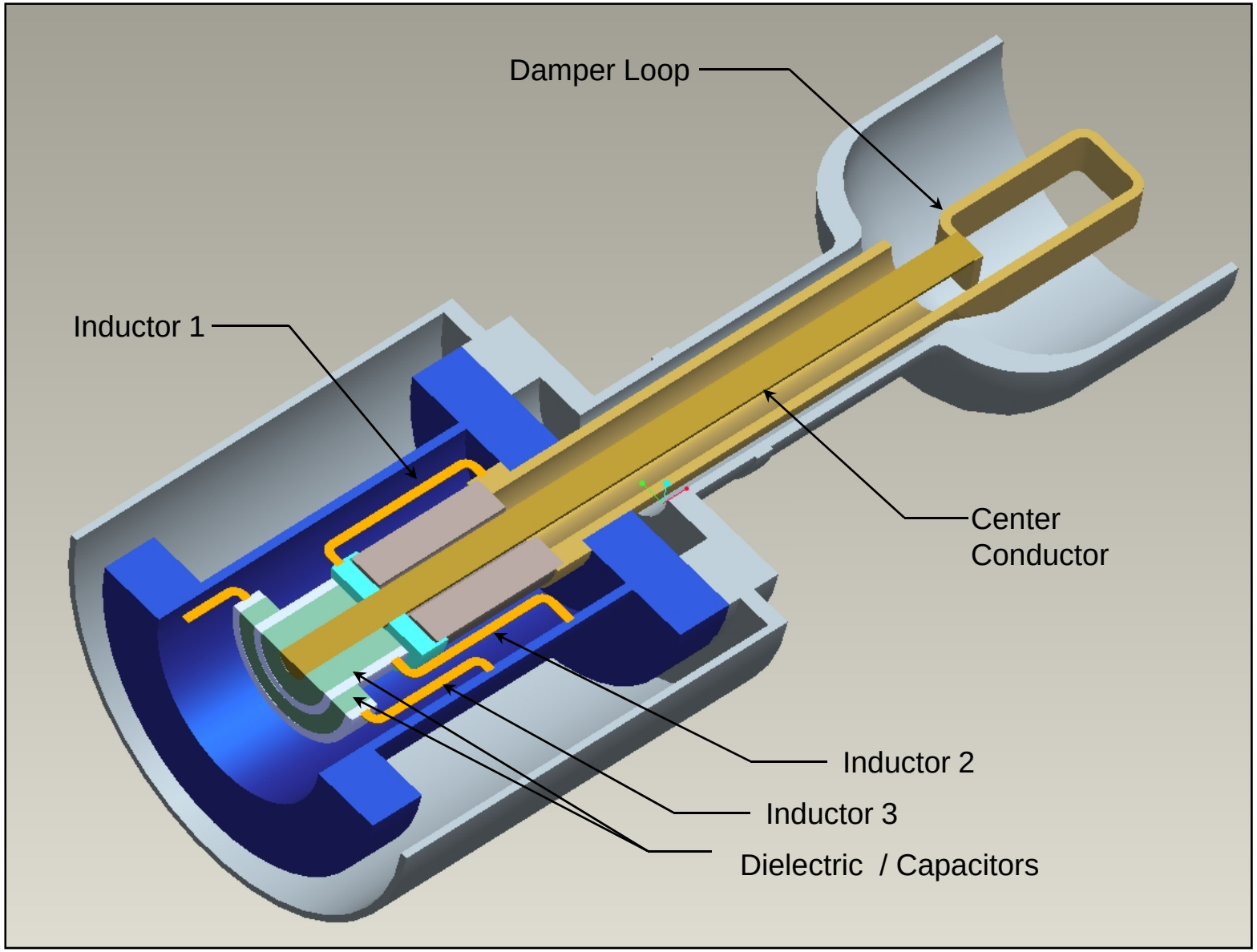

HOM Thermal Analysis

Boundary Conditions

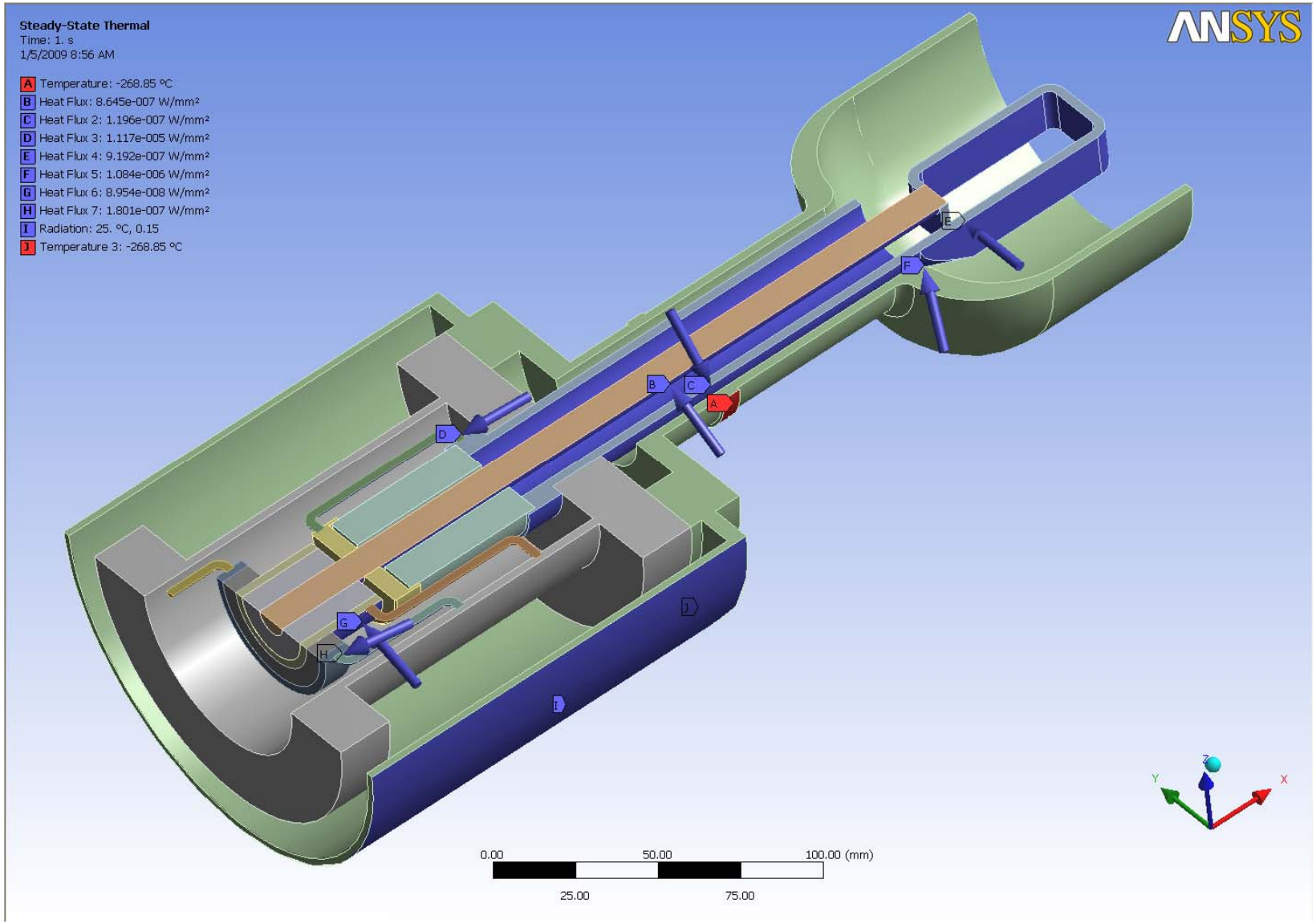

HOM Thermal Analysis

Results

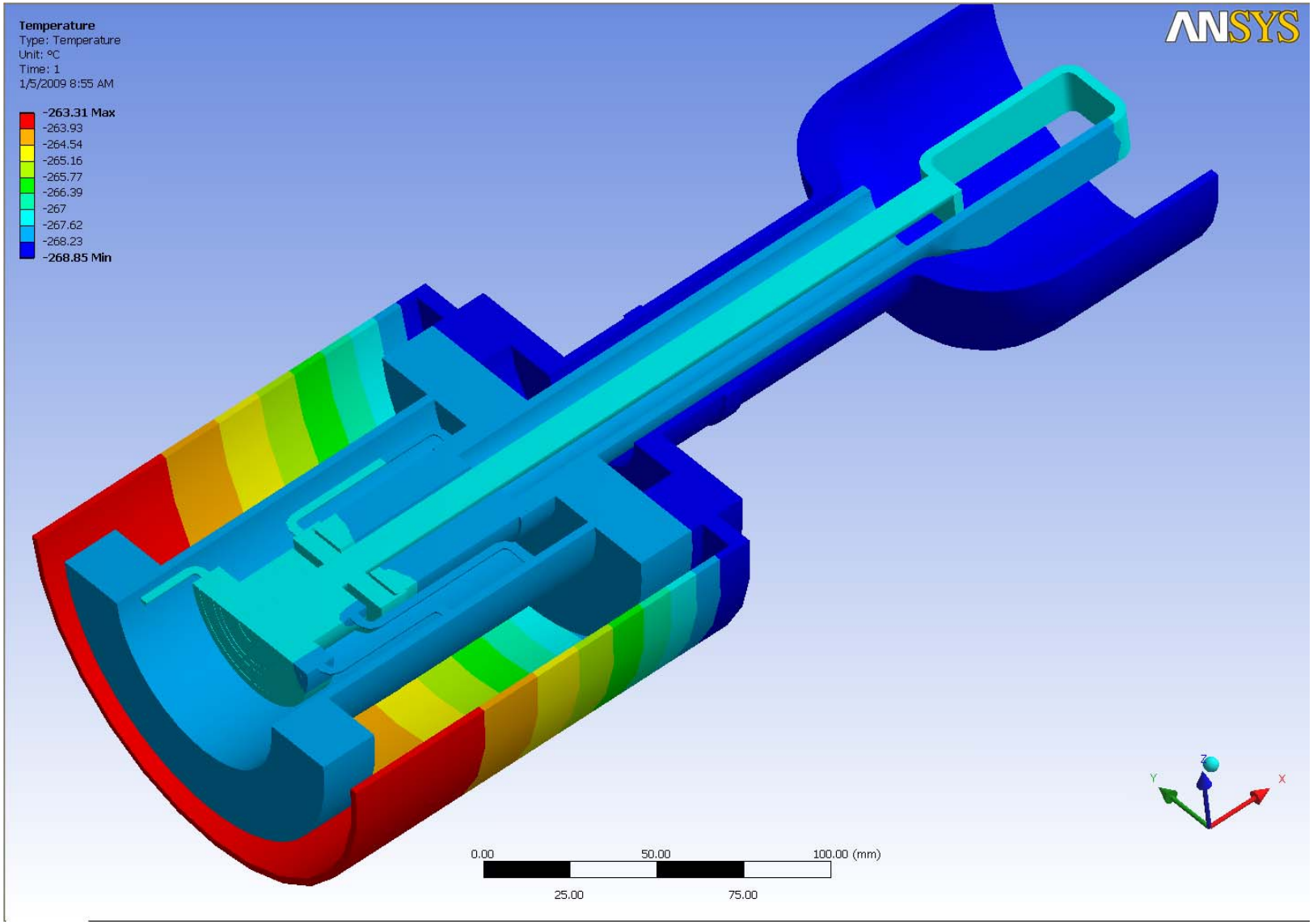

HOM Damper Loop Fabrication

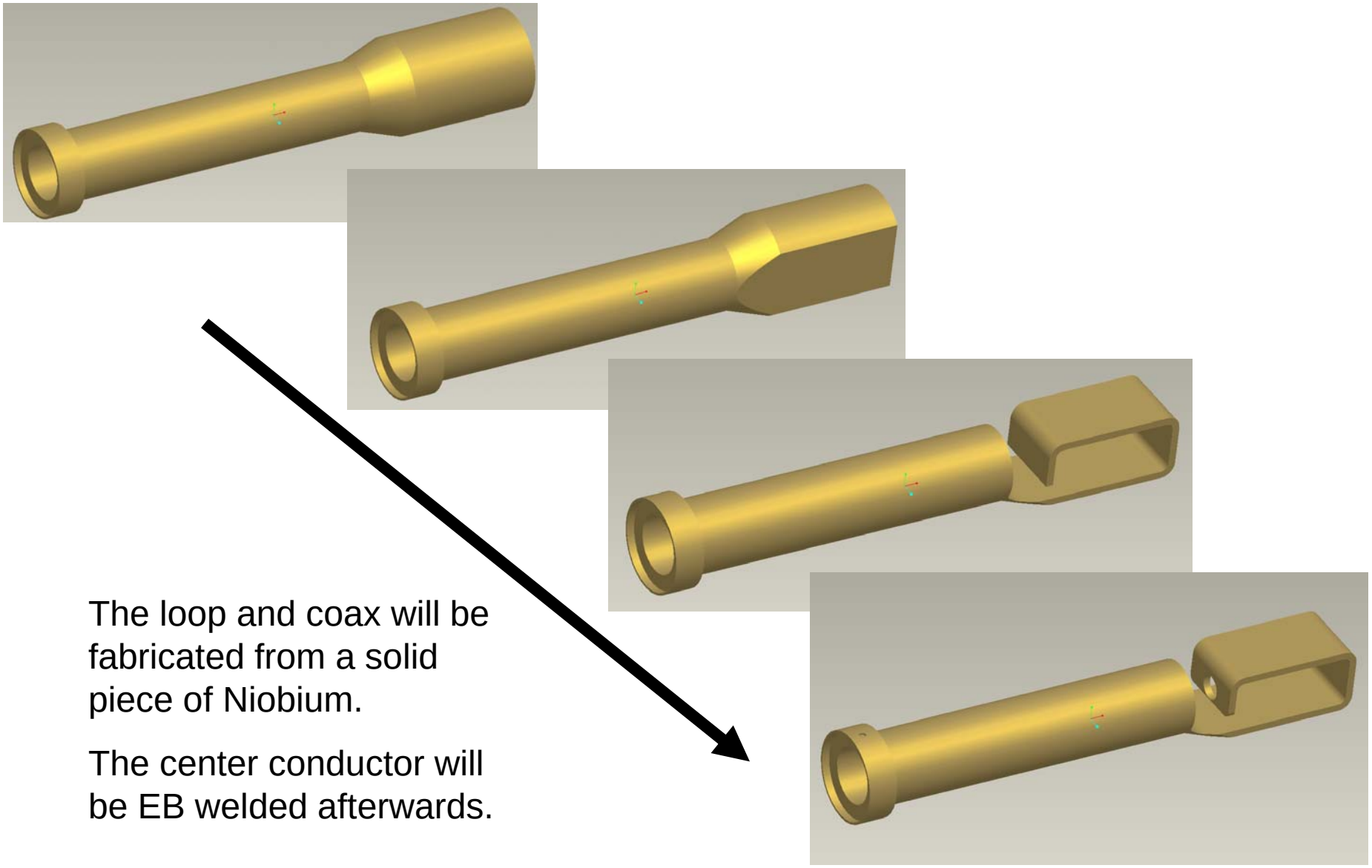

The loop and coax will be fabricated from a solid piece of Niobium.

The center conductor will be EB welded afterwards.

HOM Summary

- Design of dielectric break / capacitor geometry and material still in progress. Considering Saphire for vacuum break/window to reduce loss tangent heat load.

- Preliminary thermal analysis results indicate that some heat-stationing is required to overcome heat loads from internal power, ambient conduction / radiation

- Fabrication of one-piece loop is feasible

- Still need detailed design of:
  - feedthroughs/connections
  - insulating vacuum / radiation shielding
  - removal / maintenance scheme