HOM damper

Eunmi Choi
on behalf of Superconducting Accelerator and Electron Cooling Group
Collider-Accelerator Department

56 MHz AIP Review Meeting

Jan 8-9, 2009

Field pattern (f0 = 56.264 MHz)

E field

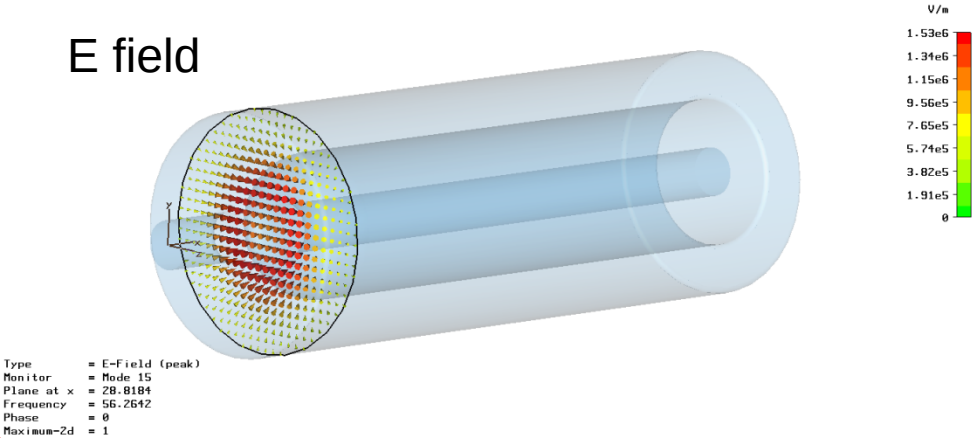

H field

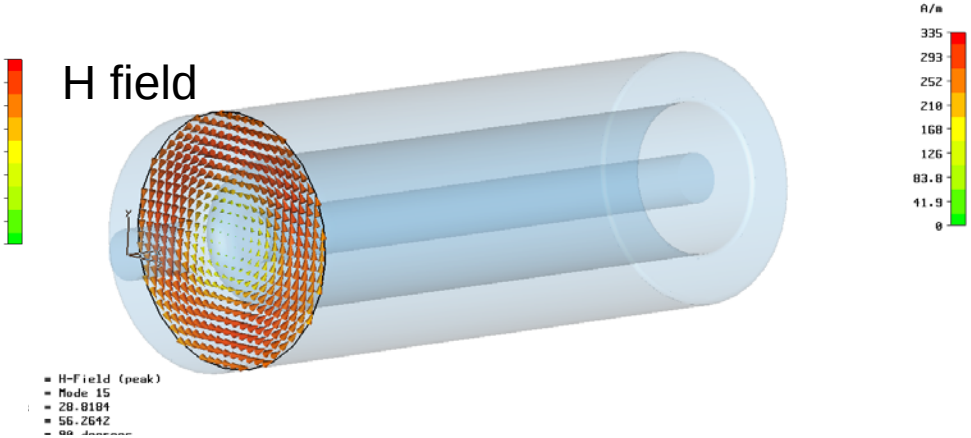

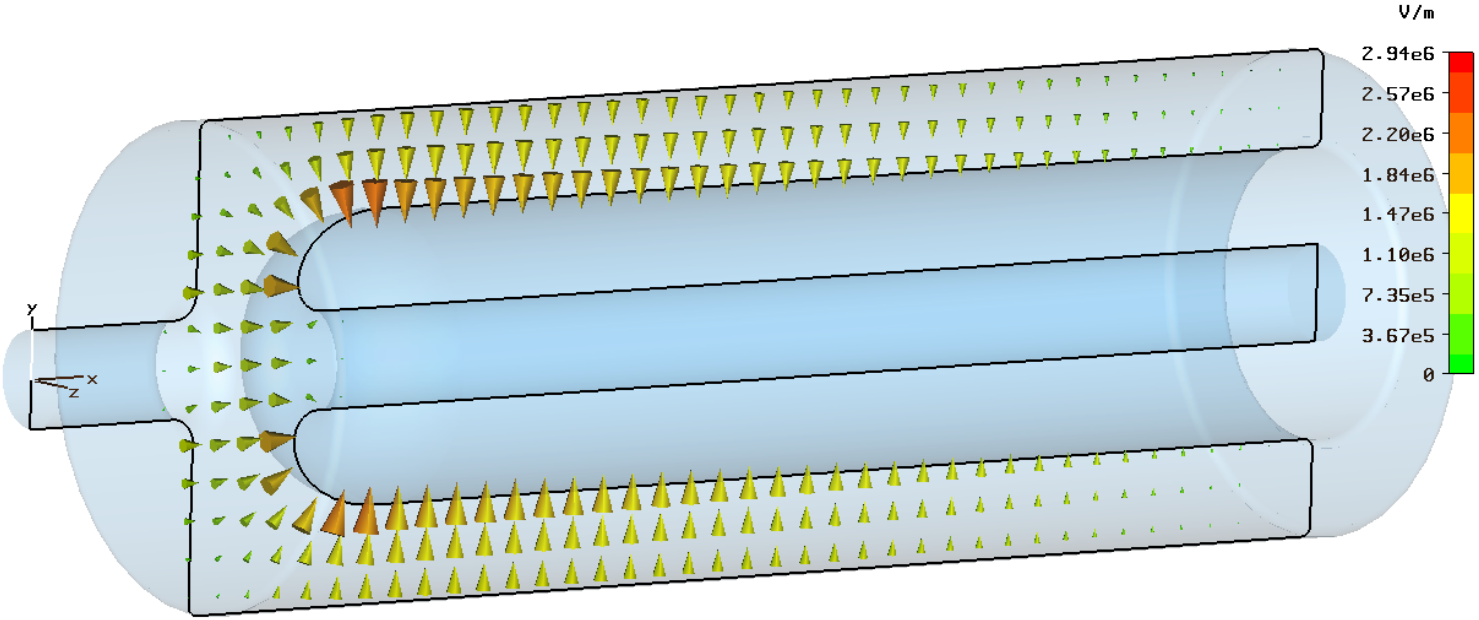

Type = E-Field (peak)
Monitor = Mode 15
Plane at z = 0
Frequency = 56.2642
Phase = 0 degrees
Maximum-2d = 2.93934e+006 V/m at 40.1667 / 15 / -3.06152e-015

Field pattern (f0 = 167.848 MHz)

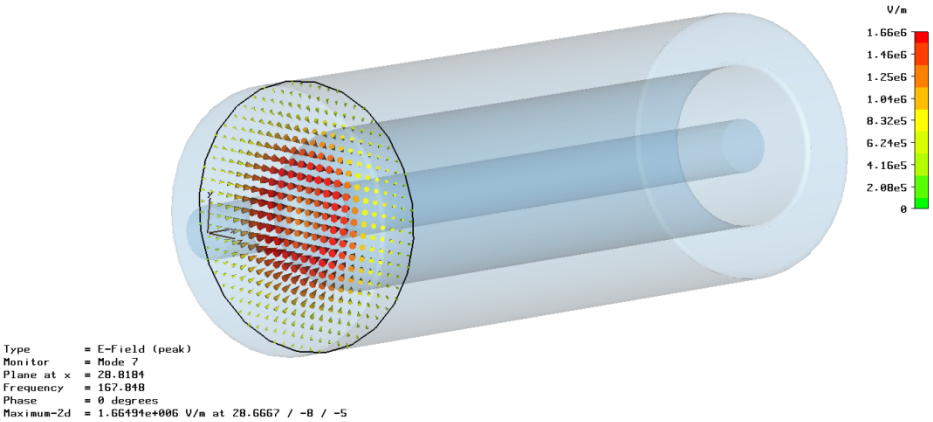

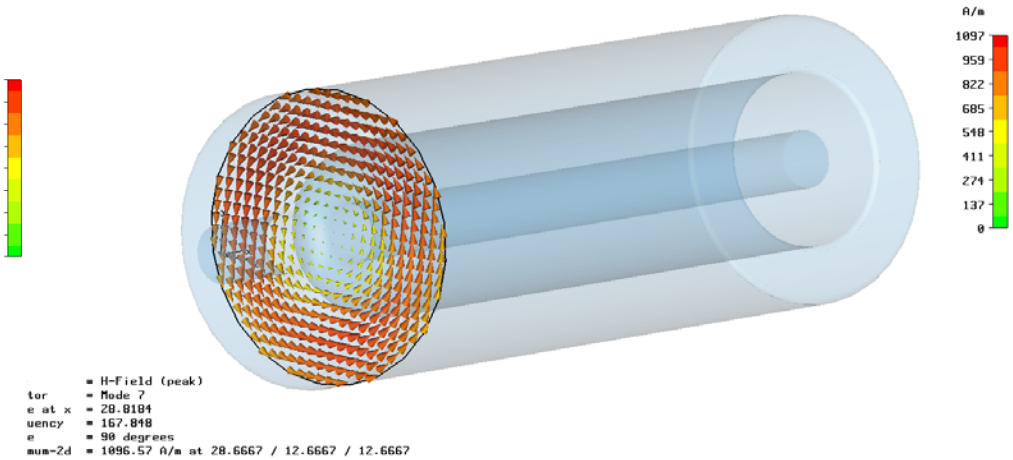

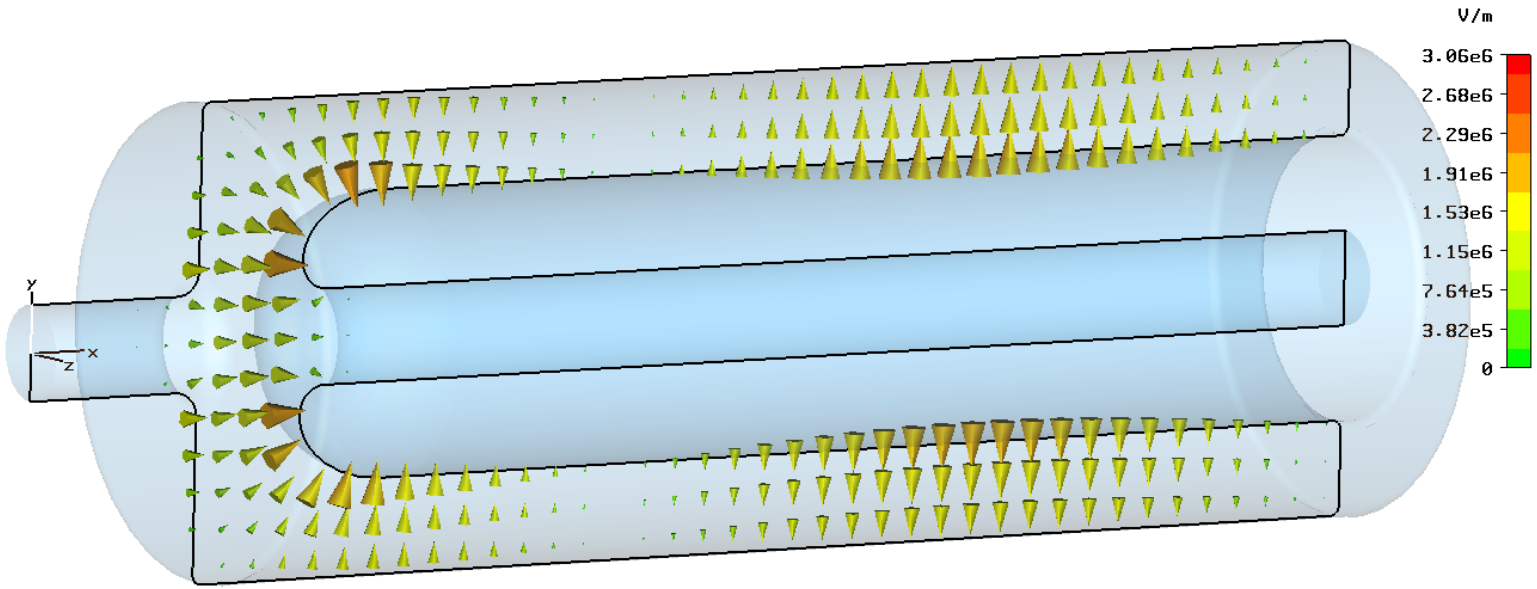

Type = E-Field (peak)
Monitor = Mode 7
Plane at z = 0
Frequency = 167.848
Phase = 0 degrees
Maximum-2d = 3.05741e+006 V/m at 32.5 / 10.3333 / -3.06152e-015

MWS simulation setup of HOM dampers

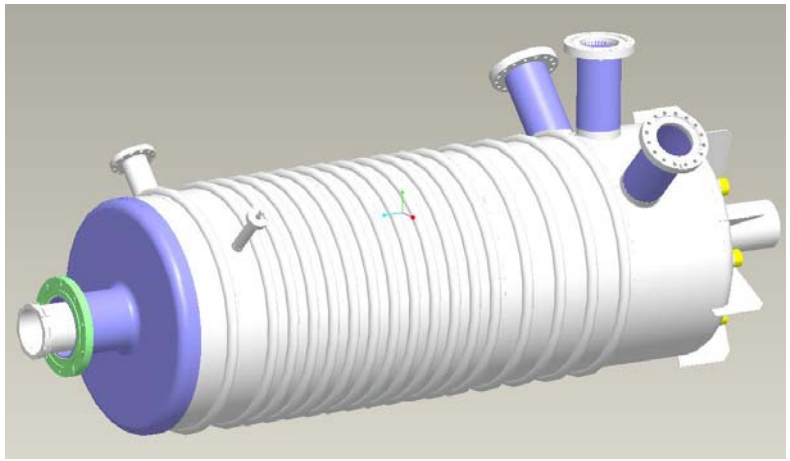

- A combined study of prototype cavity measurements and the simulations shows that the HOM dampers has to be located at the strongest magnetic field region to effectively damp out all HOMs.

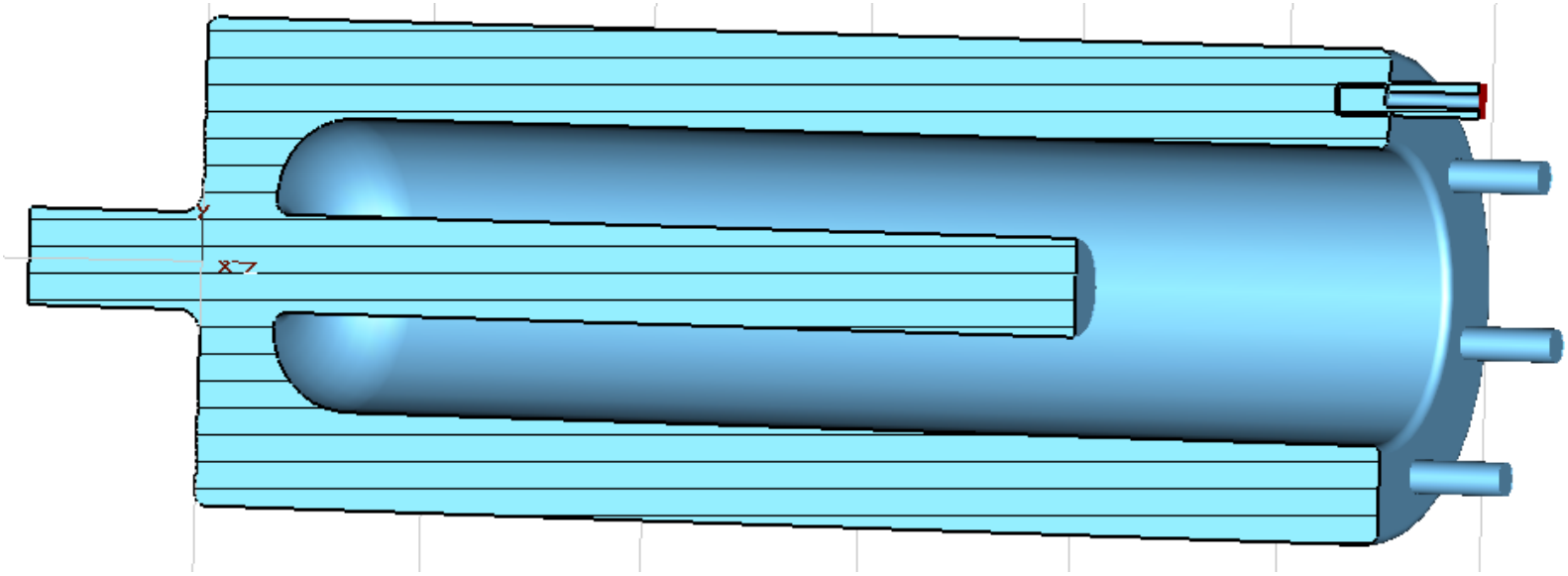

- A new configuration of the HOM dampers location utilizes the opening ports for the chemical cleaning ports.
- A new size of HOM damper is 6 x 2.88 cm.

Simulations of HOMs damping

Omega3P	MWS	Omega3P	MWS	Omega3P	MWS
Frequency (MHz)	Frequency (MHz)	Qext	Qext	R/Q	R/Q
56.263	56.241	3485	4255	80.0	78.9
167.865	167.790	1694	1818	32.3	30
276.205	276.147	1704	1614	27.5	23.2
378.447	378.393	2073	1780	27.9	22.6
475.459	475.393	2520	2040	21.7	21.4
574.779	574.724	3127	2580	13	15.8
680.133	680.038	2802	2520	6.7	9.8
789.259	789.042	4108	3800	3.5	6.2
899.415	899.121	37142	50400	2.8	4.9
1009.348	1008.668	4577	5726	2.8	6.5
1112.723	1112.011	5401	4900	14.9	23.4
1138.591	1137.910	10663	11060	17.7	11.6

Required Q of monopoles for stability

Calculated by Nathan Towne

Frequency (MHz)	Q
56.16	
167.563	2000
275.731	
377.863	25000
474.9	7000
574.3	5000
679.8	25000
788.8	100000
898.2	
1008	10000
1112	
1139	

Prototype Cu cavity

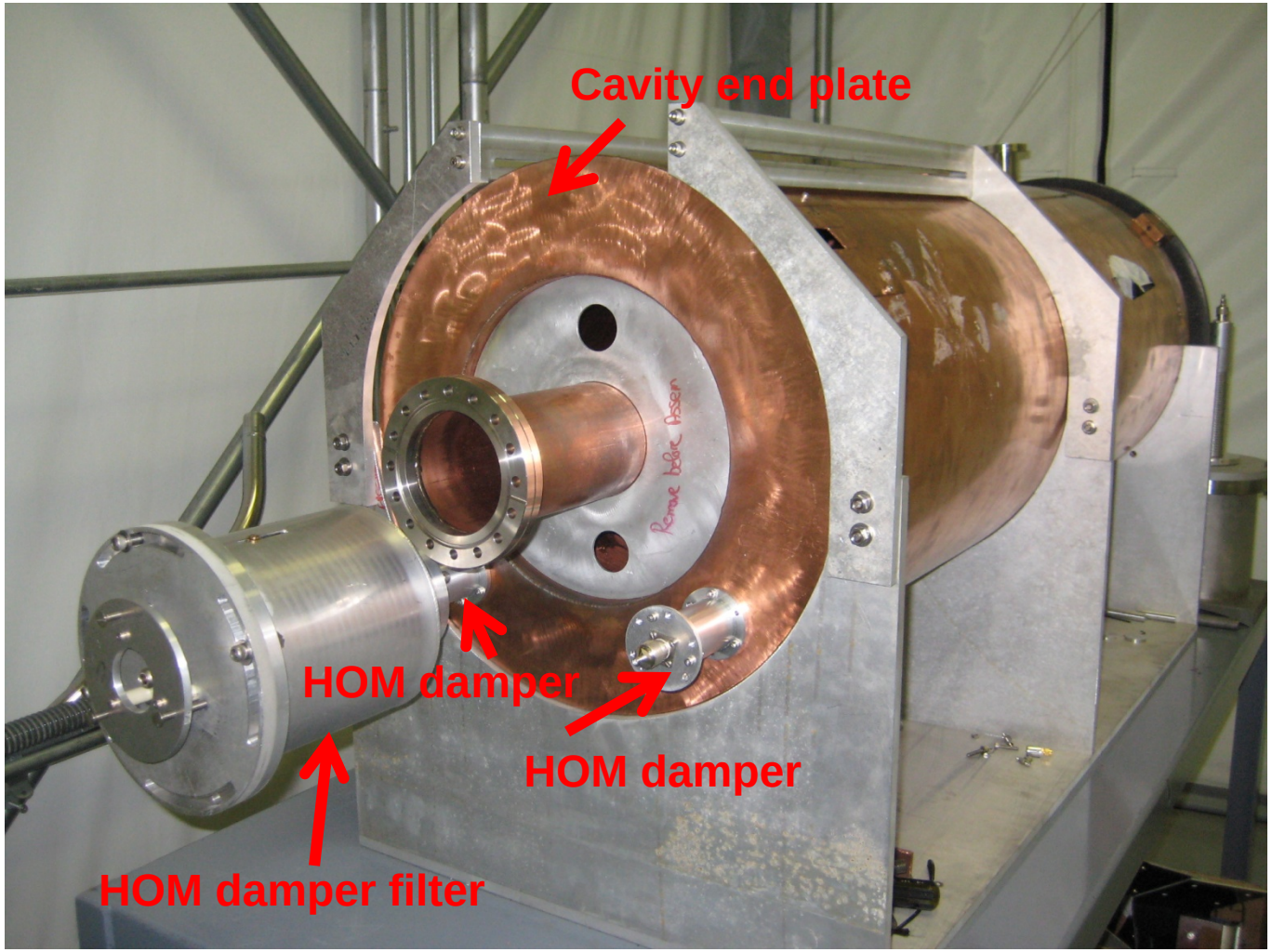

HOM damper

HOM damper filter

- High pass band filter tested
- Q of HOMs measured

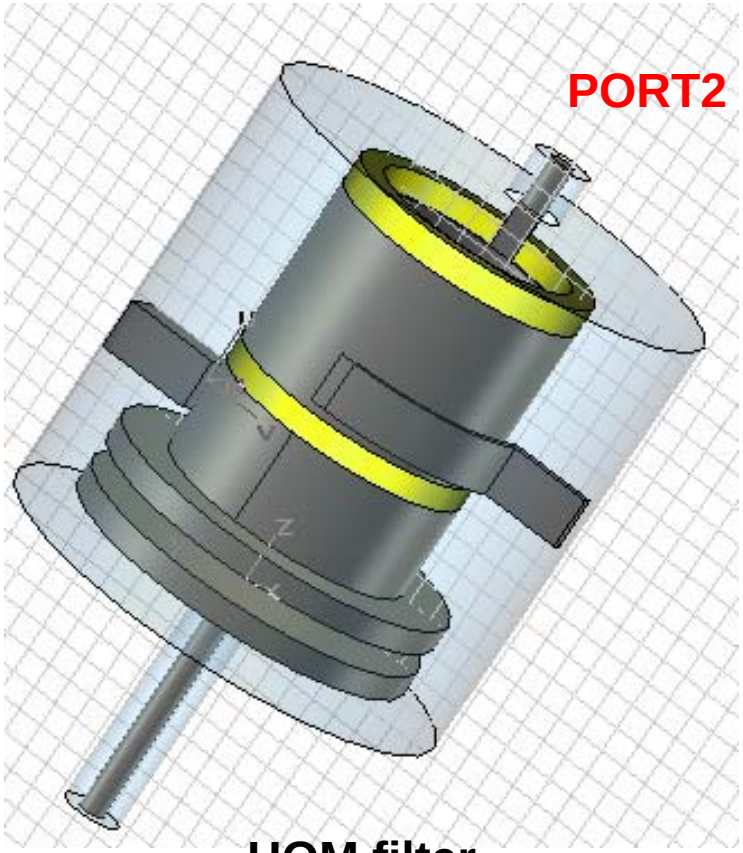

HOM filter

2 HOM dampers with one HOM filter

f (MHz)	Q (measured)	Q(tolerance)
168.106	1575	2000
278.081	1450	Not specified
384.226	1951	25000
484.195	341	7000
585.22	2252	5000
673.676	2338	25000
761.919	2805	100000
1004.856	5577	10000

The measured Q values with the HOM damper meet the tolerances from stability analysis.

New HOM damper filter simulation

CST MWS

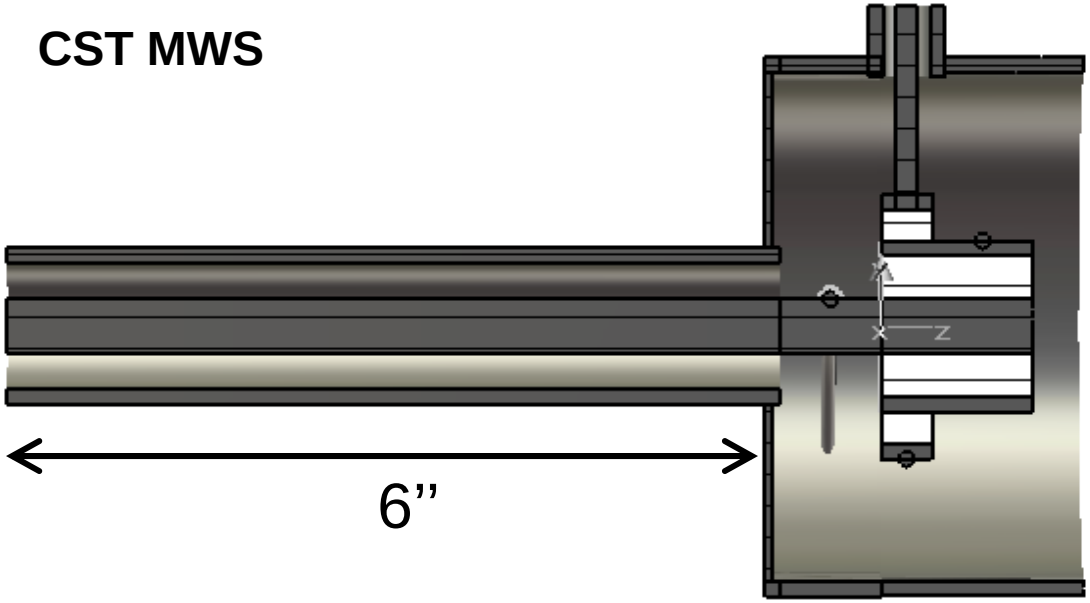

A new compact HOM filter has been designed and under fabrication.
→ Allows a current path through the first inductor which enables the cooling path much simpler.

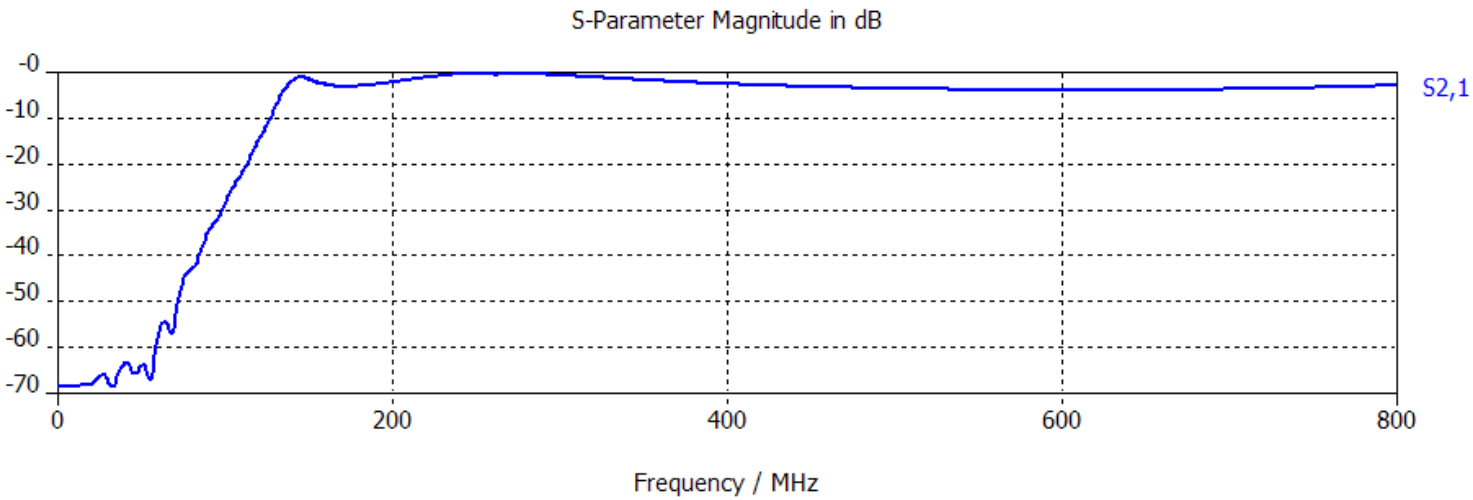

-60 dB rejection
At 56 MHz

New HOM damper filter analysis

PSPICE simulation

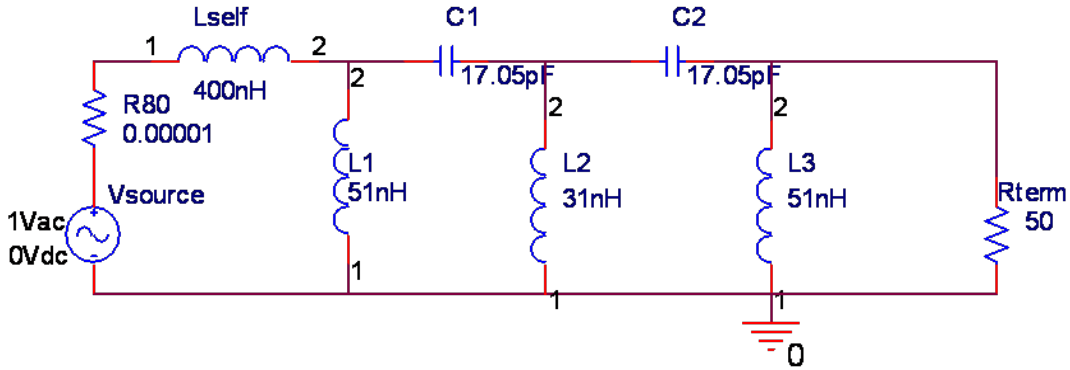

at 56 MHz (45 kV applied in the loop)							
V_{L1}	5.7 kV	V_{L2}	435 V	V_{L3}	49 V	V_R	49 V
I_{L1}	315 A	I_{L2}	40 A	I_{L3}	0.99 A	I_R	0.99 A
at 167 MHz (28 V applied in the loop)							
V_{L1}	3 V	V_{L2}	3.5 V	V_{L3}	3.1 V	V_R	3.1 V
I_{L1}	0.062 A	I_{L2}	0.1 A	I_{L3}	0.062 A	I_R	0.058 A

Slow tuner

Slow tuner scheme tested on the prototype cavity

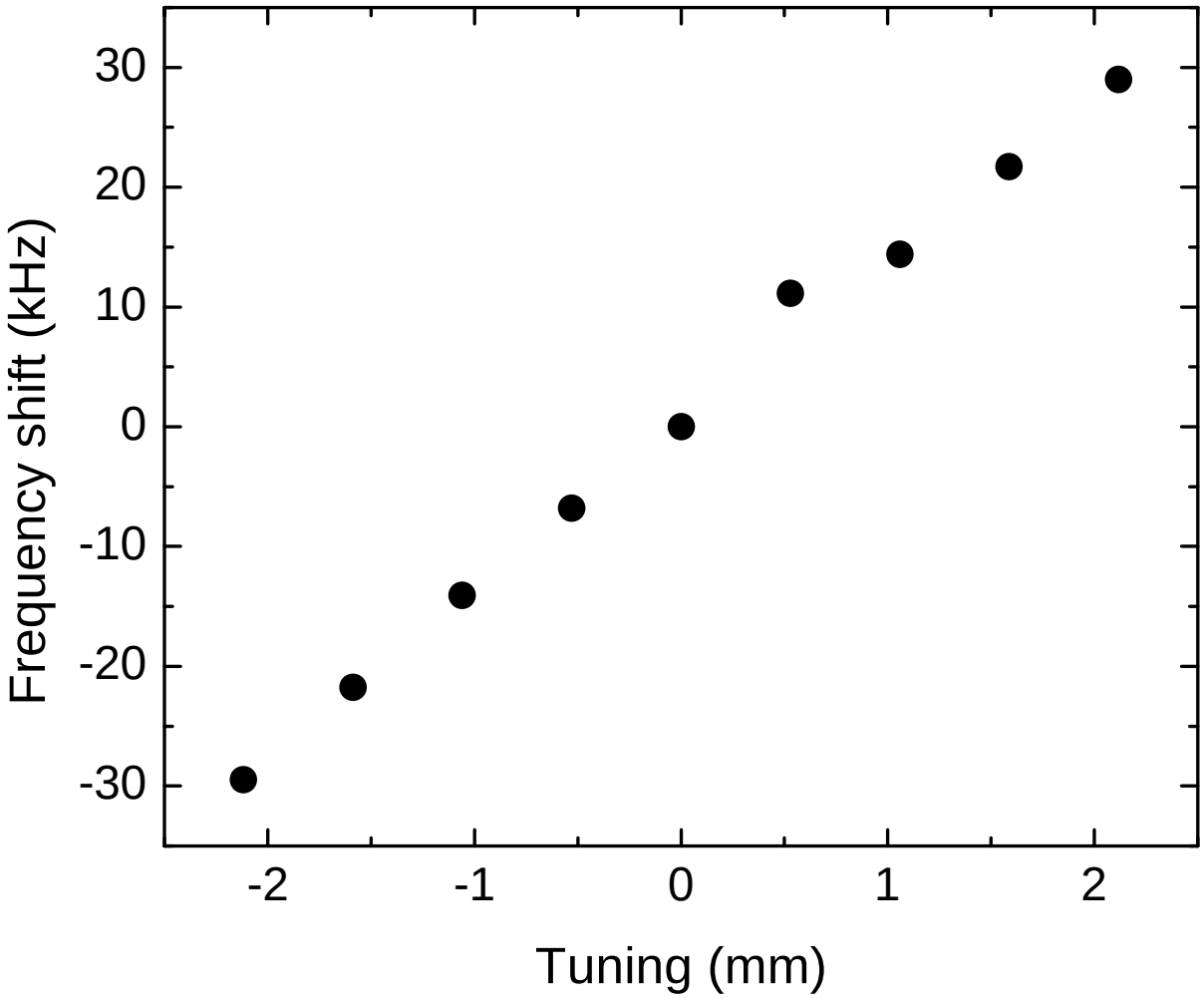

Measured tuning range (~15 kHz/mm) agrees well with simulation

FPC

Inductively coupled fundamental power coupler

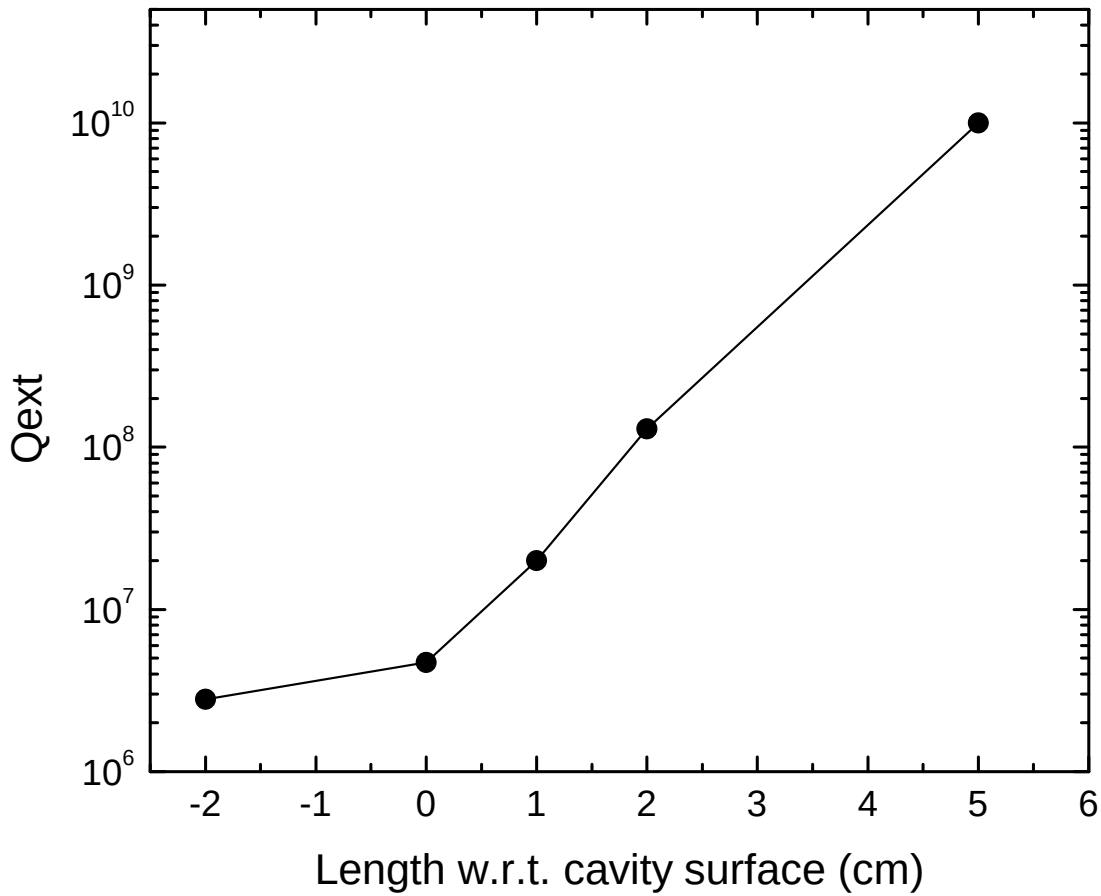

- The location and the size of the FPC are decided based on the measurements and simulations. (The required coupling factor of 50, which translates Q_{ext} ~ 4×10^{7}).

Conclusions

- The HOM damper has been designed and prototype-tested.
- The HOM loop size is re-optimized to be 3 cm by 2.88 cm, and located at the cavity plate utilizing the planned chemical port openings.
- The Qs of HOMs meet the stability requirements.
- The compact HOM damper filter has been redesigned.