The RHIC 56 MHz SRF Cavity Structural Design

C. Pai

Collider-Accelerator Department

Basic Shape of RF cavity

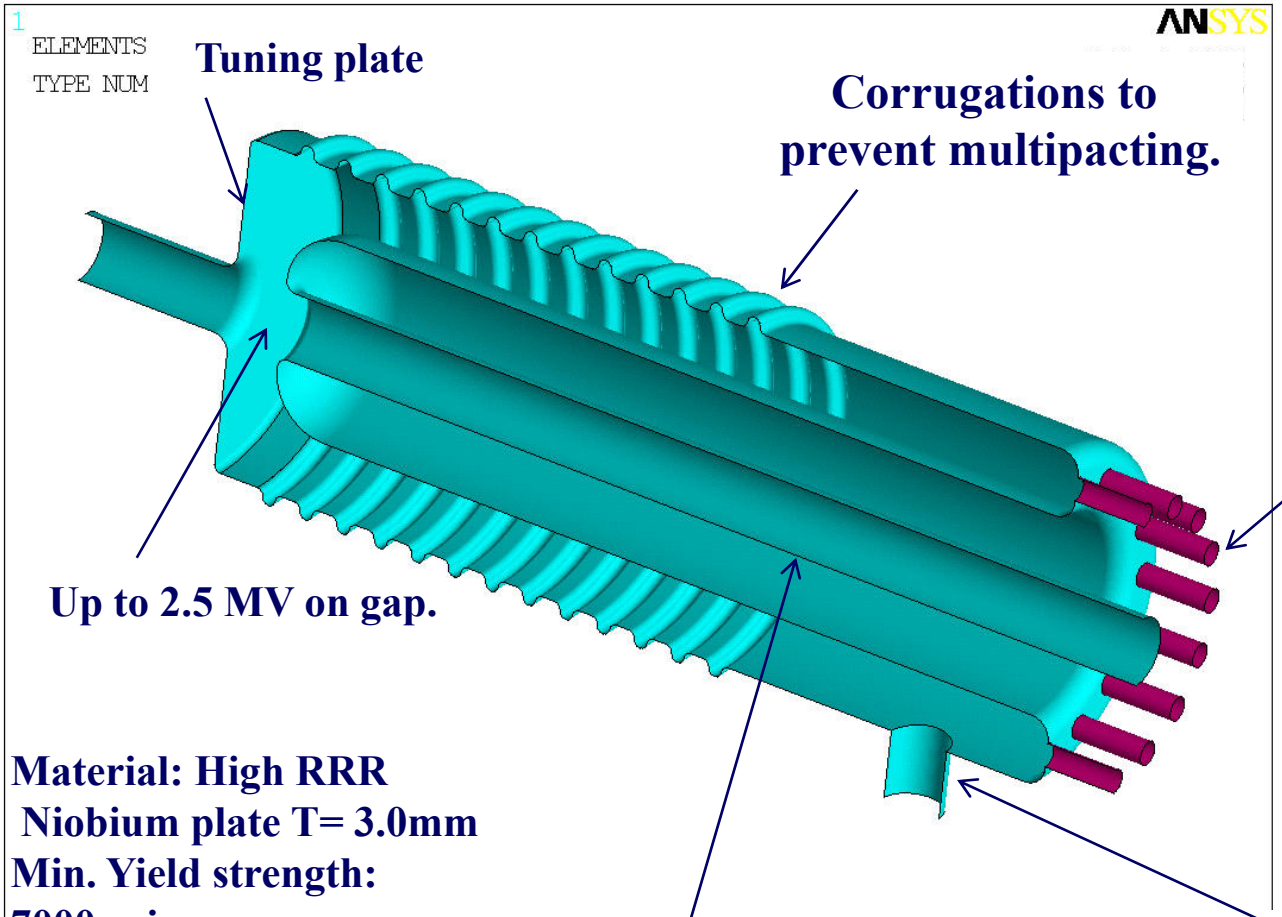

Tuning plate

Corrugations to prevent multipacting.

16 ports in the bottom.
8 ports for RF instrumentations.
8 ports for structural reinforcement and cavity support.

Up to 2.5 MV on gap.

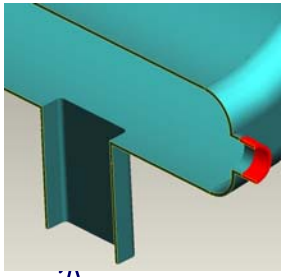

Material: High RRR Niobium plate T= 3.0mm
Min. Yield strength: 7000 psi

Reentrant cavity geometry with beam along the cavity axis.

Damper port (current design is rectangular)

Design Goals

1. Meet physic requirements
2. Feasible and Reliable Structure
3. Easy and Controllable Mechanical Tuning capability
4. ASME Pressure Vessel Code Compliance
5. High Natural vibration Frequency, > 60 Hz and higher
6. Low Sensitivity to Helium Pressure Fluctuation < 1 Hz/mbar
7. Low Lorentz Detuning.

RF Cavity Vessel and Reinforcement

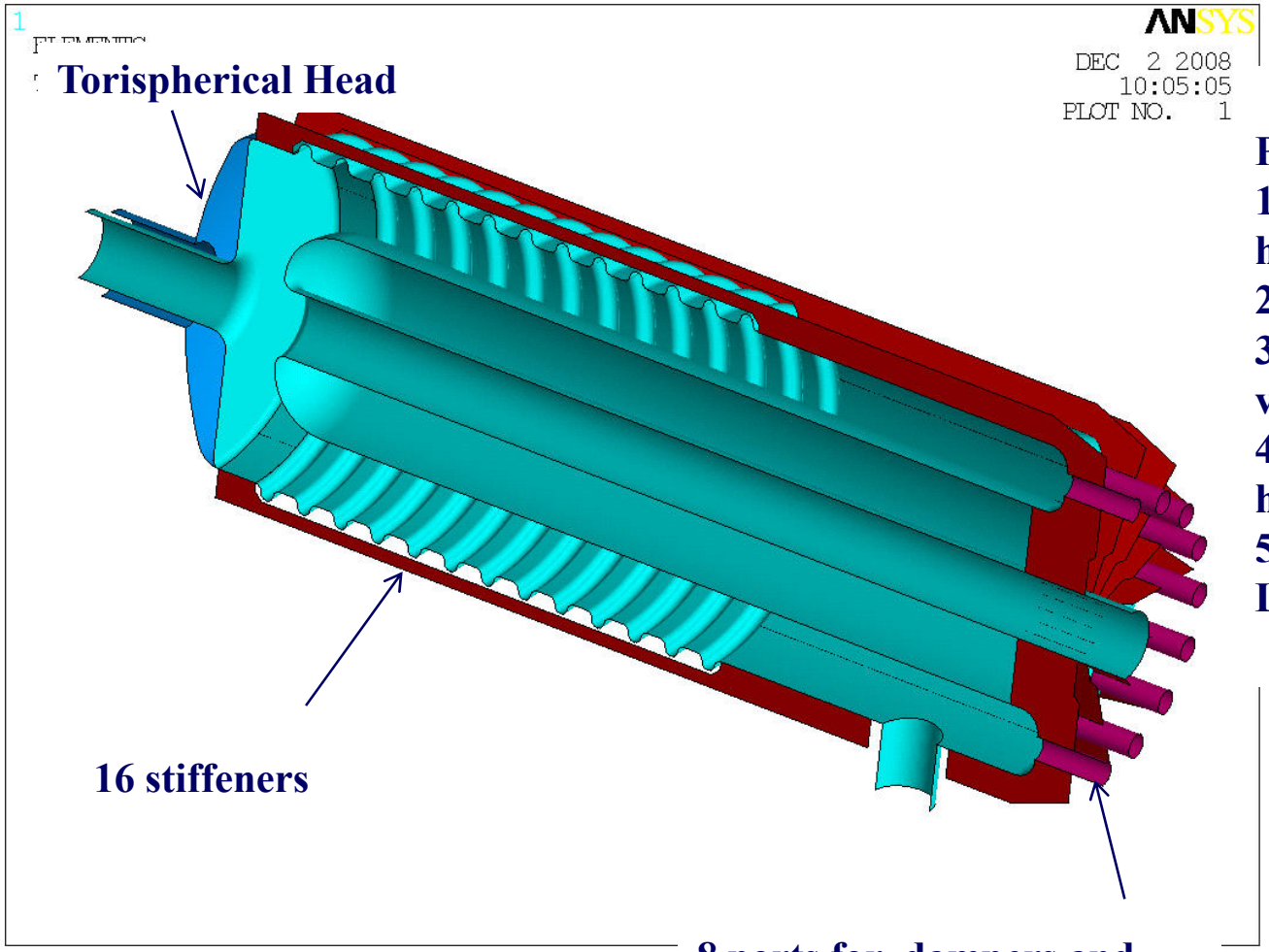

Purpose:

1. Let tuning plate free from helium/vacuum pressure.
2. Reinforce the corrugation.
3. Increase the natural vibration frequency.
4. Reduce the sensitivity of helium pressure fluctuation.
5. Reduce the magnitude of Lorentz detuning.

8 ports for dampers and instrumentations . Other 8 ports are support base for cavity when attached to helium vessel.

Dimension of RF cavity Vessel

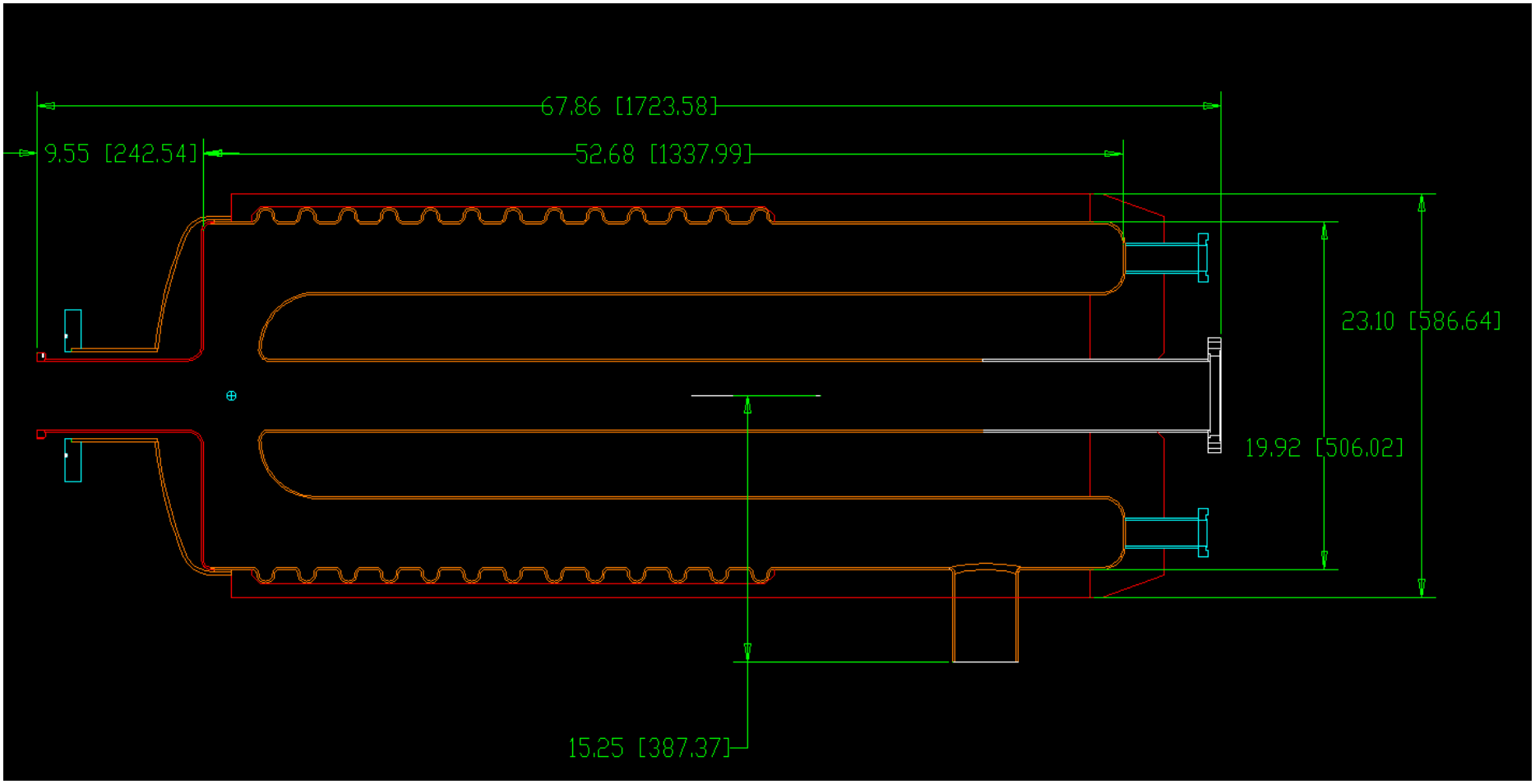

Helium Vessel

Bellow interface between RF cavity and helium vessel

Ports welded to the base of helium vessel

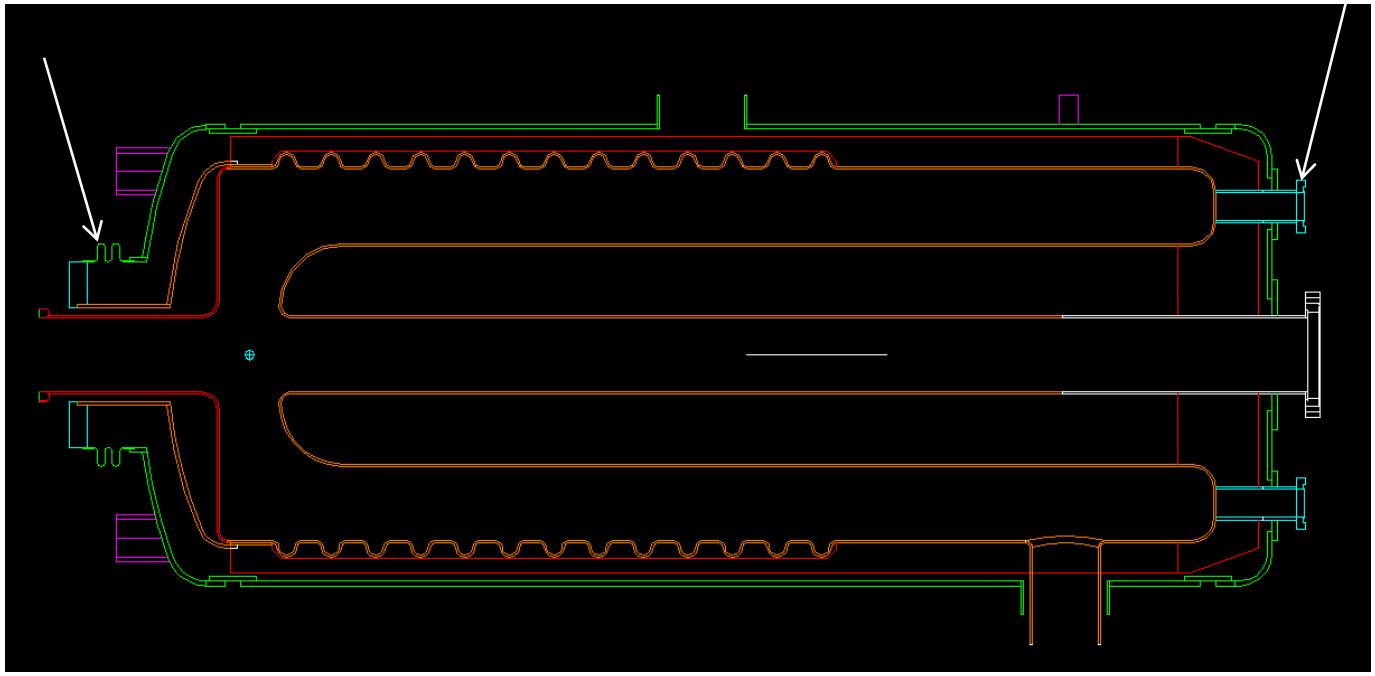

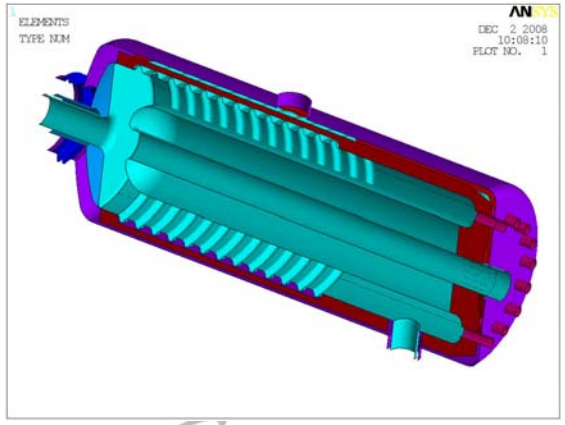

Material:
Titanium grade 2
T= .25 in (helium vessel)
T=.020 in (Bellow)
Min. Yield strength:
35,000 psi

RF cavity attached to helium vessel in two places:

1. **Welded to the bottom of the Helium vessel in 16 ports.**
2. **Joint the upper pressure head with a bellow.**

Tuning plate and Tuner Connection

Connecting plate with bellow. This plate is connected to the tuner mechanism

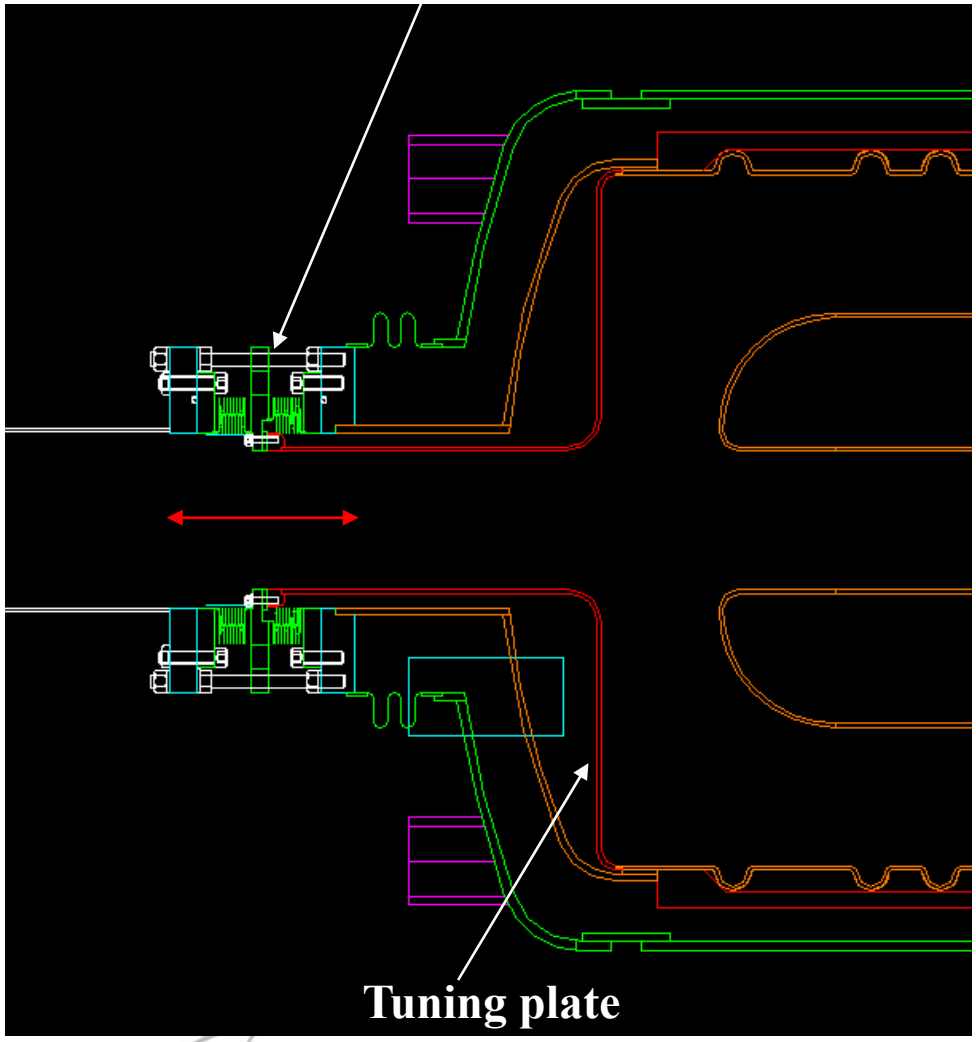

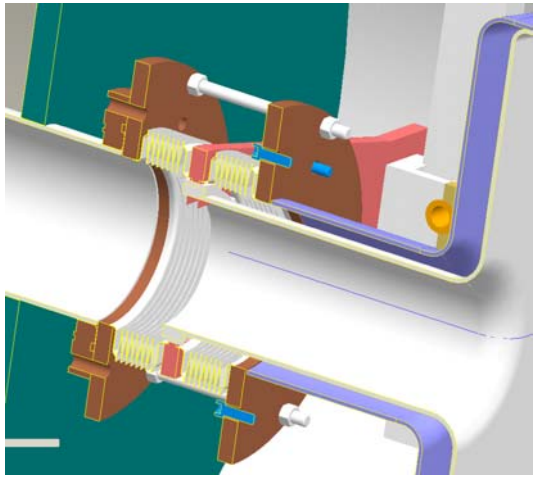

1. **The upper cavity has a separate torispherical head cover the tuner plate to take helium and vacuum load.**
2. **The tuning plate is free from vacuum and helium pressure.**
3. **The Tuning connection is through a driving plate which is movable between two bellows and connected to the tuner mechanism.**
4. **A set of threaded rods will reconnect the beam pipe through this bellow-plate-bellow structure.**

56 MHz RF Cavity/Helium Vessel Support

Self centered Nitronic rods will be used to provide both radial and axial supports for helium vessel

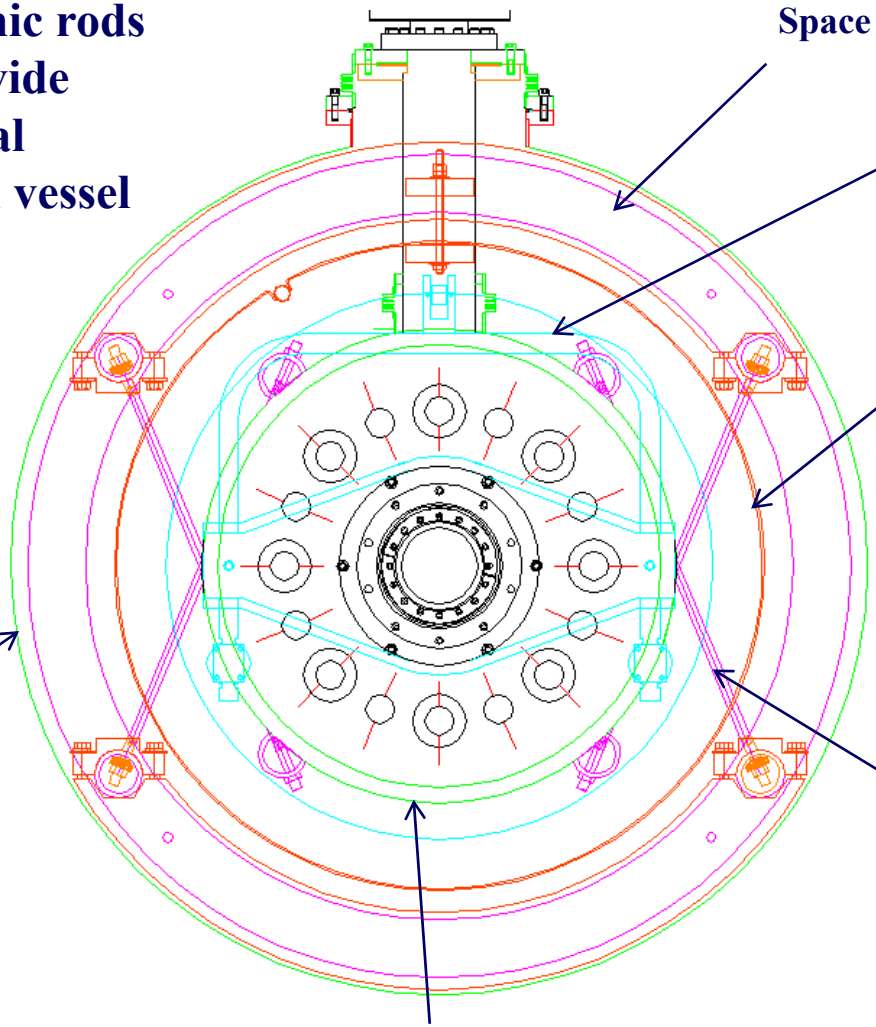

56 MHz SRF Cavity Cryostat Layout

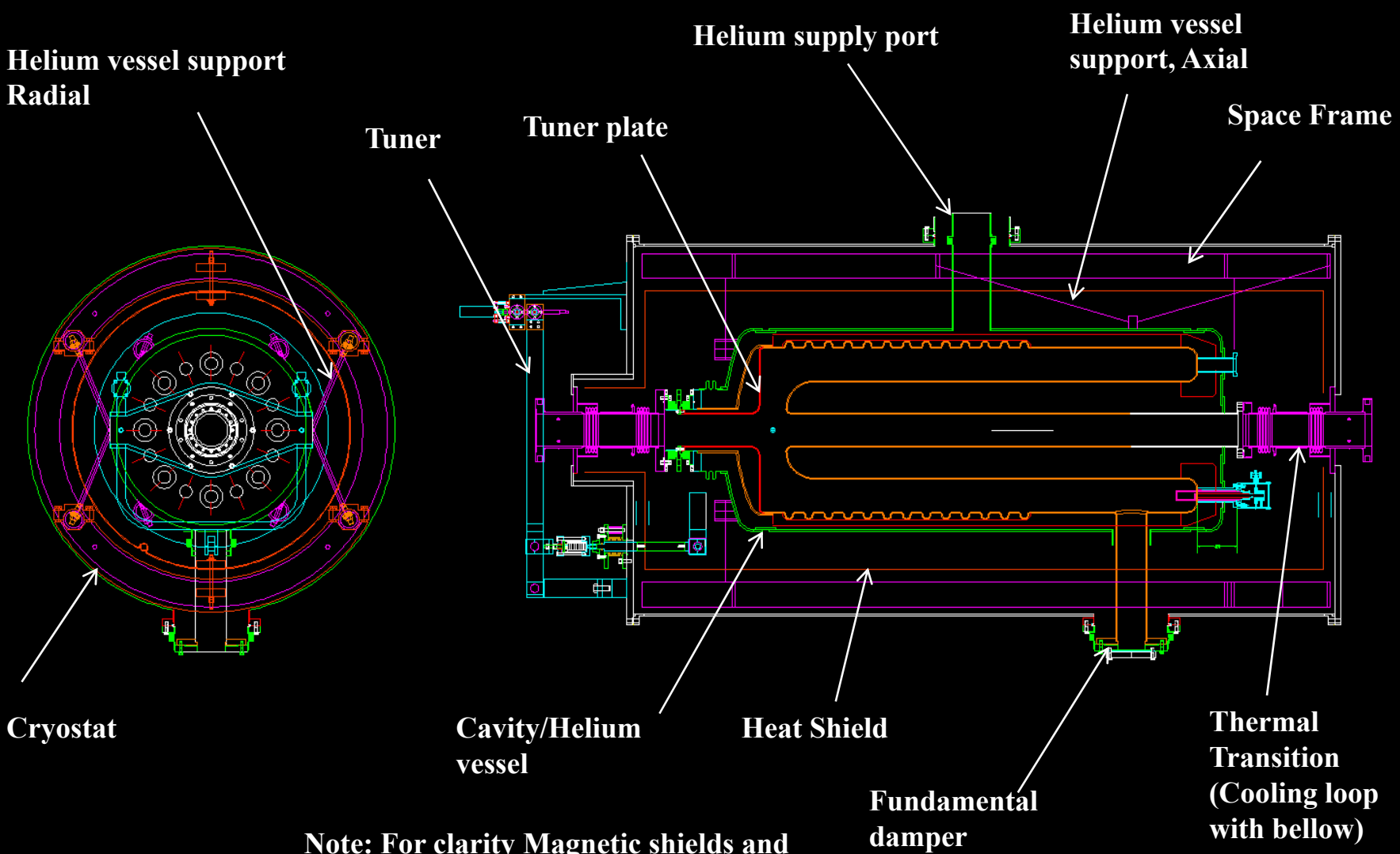

Note: For clarity Magnetic shields and super-insulation layers are not shown

BROOKHAVEN NATIONAL LABORATORY

Office of Science
U.S. DEPARTMENT OF ENERGY

ASME Pressure Vessel Code Compliance

Failure Mode Categories:

1. **Stresses Induced by Mechanical Load**
   a. Maximum Pressure (External and Internal)
   b. Weight of the Vessel
2. **Stresses Induced by Combined load**
   a. Mechanical Load (Primary)
   b. Thermal load (Secondary)
3. **Buckling Prevention (External pressure)**
4. **Fatigue Evaluation**

(Note: Stress to be checked is equivalent stress (Von Mises stress)

Allowable Stress:

1. Primary membrane: allowable is 2/3 of yield strength.
2. Local membrane plus Bending: 1.5 time of allowable (yield Strength)
3. Combined Stress: Primary + Secondary (Thermal and peak):
   3 times of allowable (2 x yield strength)

RF Cavity/Helium Vessel Finite Element Model

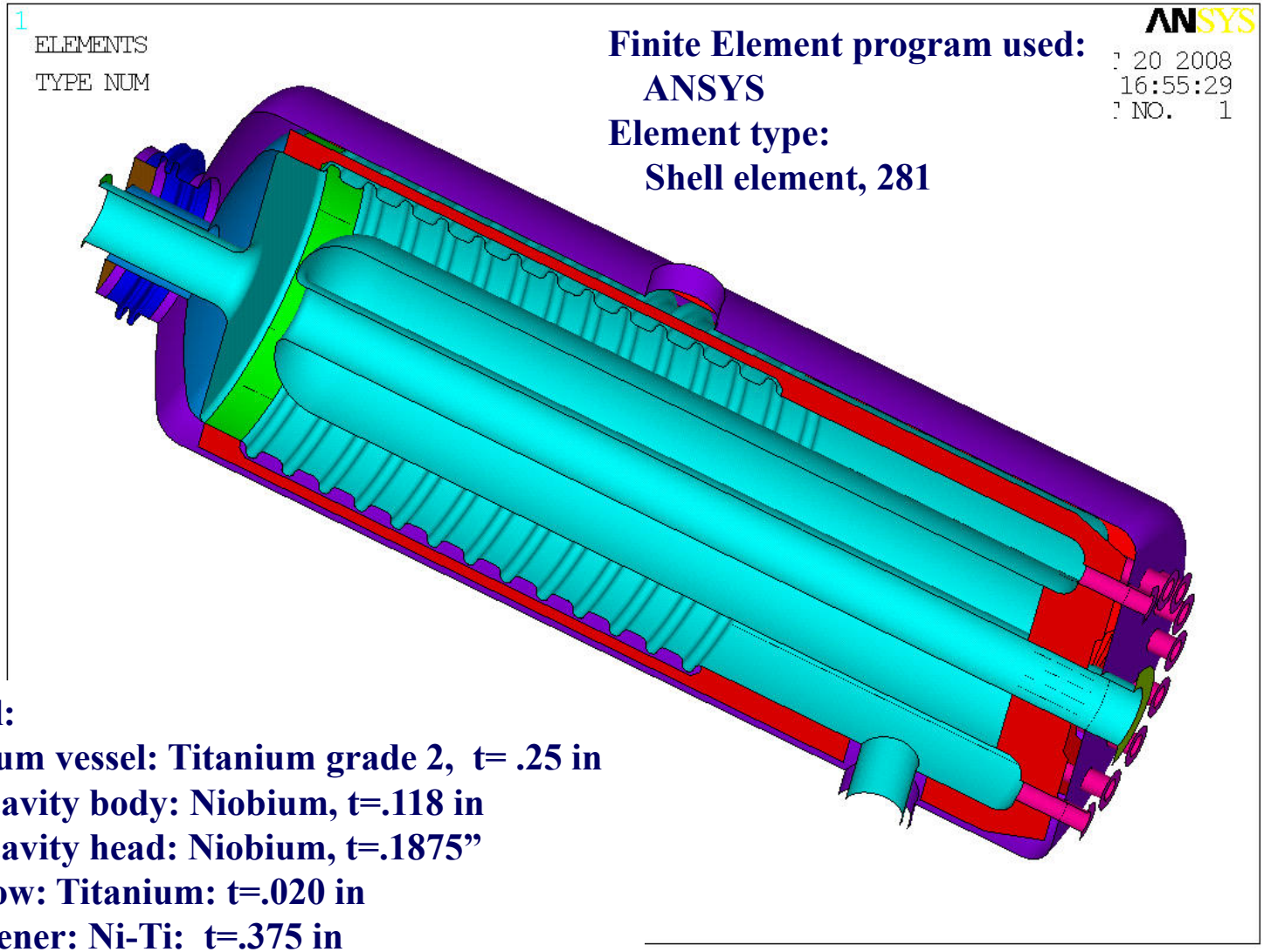

Finite Element program used:
ANSYS
Element type:
Shell element, 281

Material:

1. **Helium vessel: Titanium grade 2, t= .25 in**
2. **RF cavity body: Niobium, t=.118 in**
3. **RF cavity head: Niobium, t=.1875”**
4. **Bellow: Titanium: t=.020 in**
5. **Stiffener: Ni-Ti: t=.375 in**

Helium Pressure Loading Surfaces

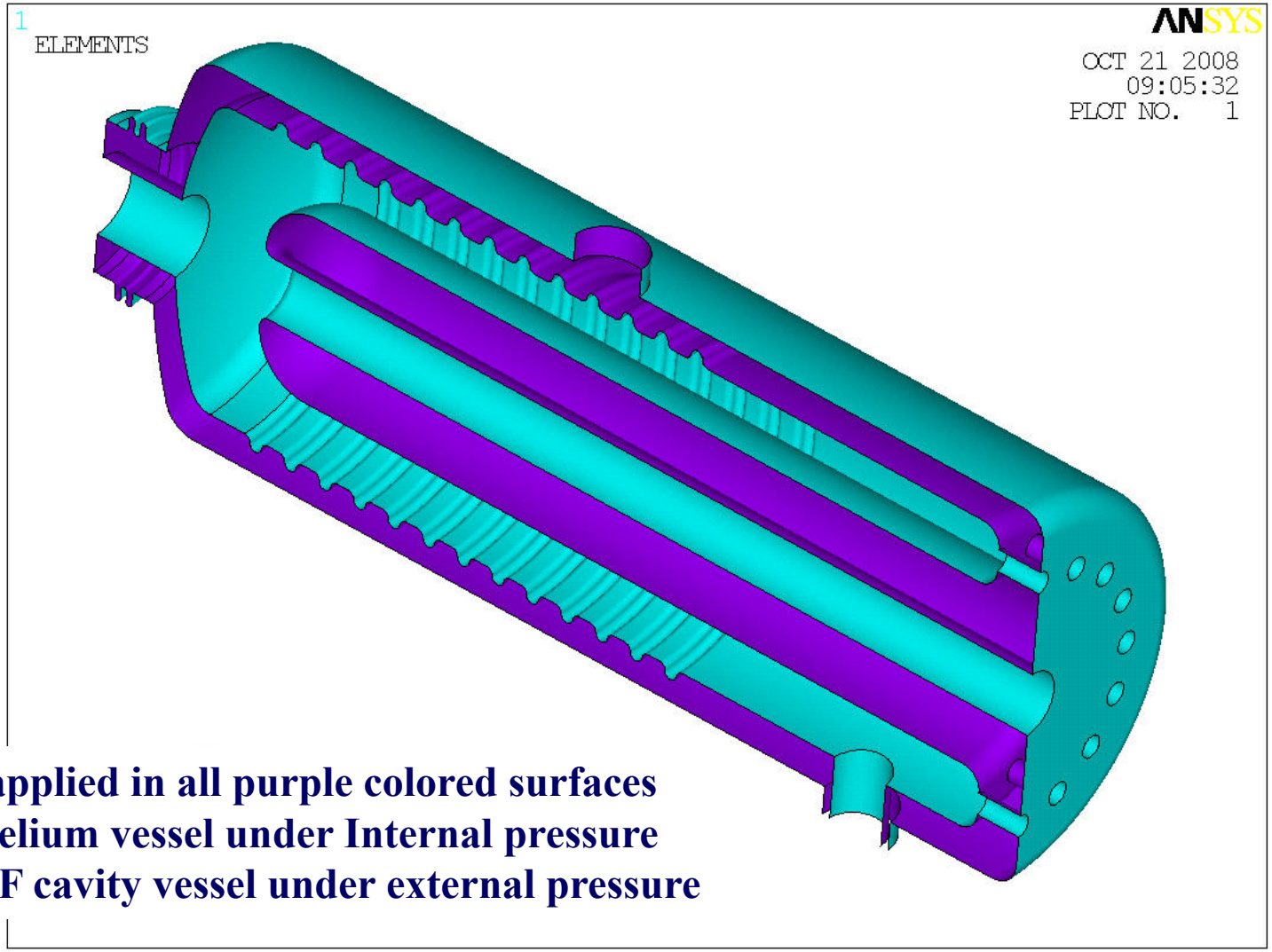

20 psi applied in all purple colored surfaces

a. Helium vessel under Internal pressure

b. RF cavity vessel under external pressure

Properties of Material

RF cavity vessel:

- Material: High RRR Niobium
- Young's Modulus: 15.5 x 10^6 psi
- Yield Strength: 7,000 psi
- Thermal Conductivity at 4 K : 74.2 W/m/K
- Integral Thermal Expansion Coefficient:

  .00143 cm/cm/k, from room temperature to 4 K

Helium Vessel:

- Material: Grade 2 Titanium
- Young's Modulus: 15.6 x 10^6 psi
- Yield Strength: 35,000 psi
- Thermal Conductivity: 21.9 W/m/K
- Integral Thermal Expansion Coefficient:

  .00151 cm/cm/k , from room temperature to 4 K

RF Cavity Under Mechanical Load, 20 psi+weight (694 lb)

Max. deflection of RF cavity center

a. Deflection relative to helium vessel

Δ Y=.0099 in (.25 mm)

b. Deflection relative to RF Outer cylinder

Δ Y=.006 in (.15 mm)

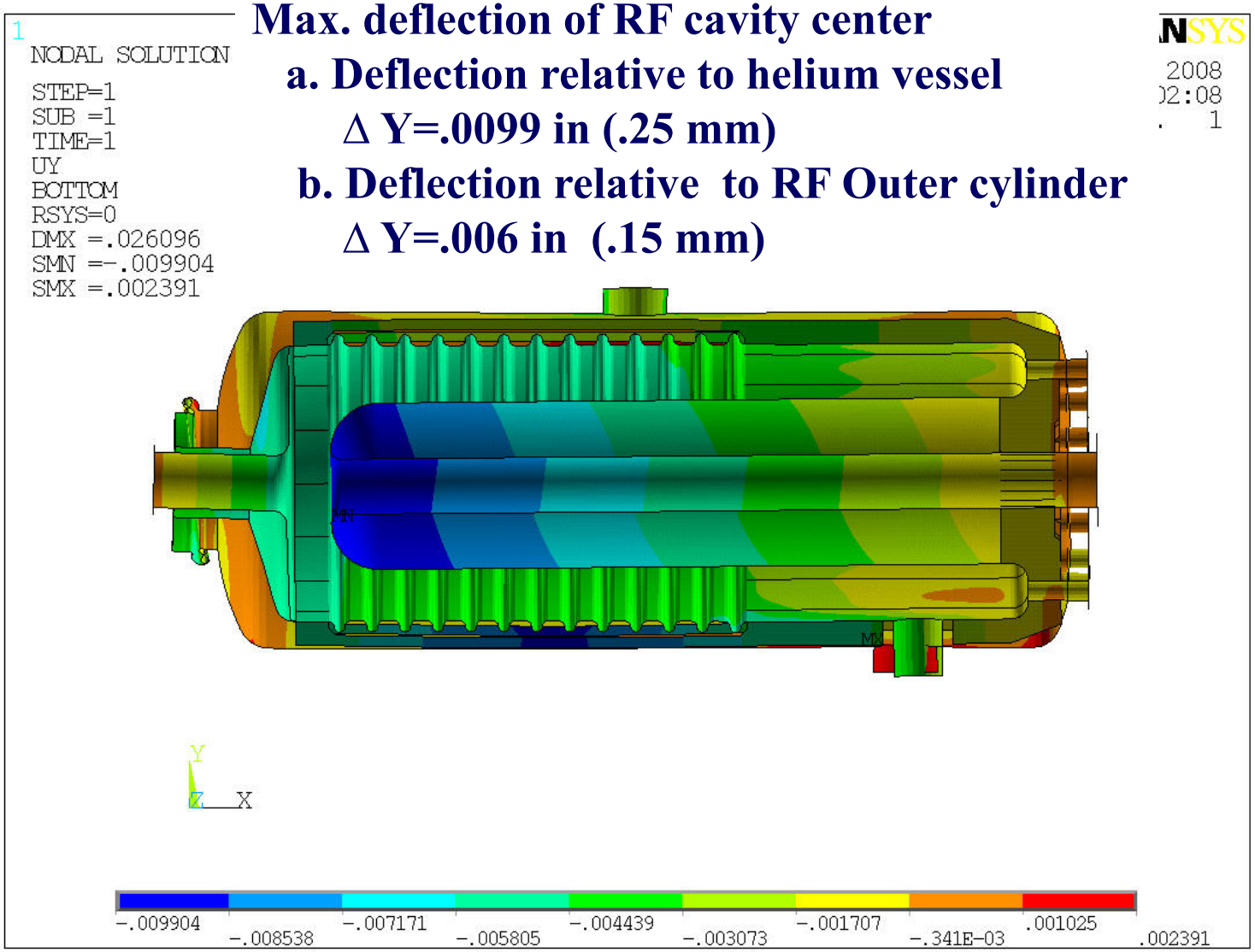

in

RF Cavity Under Mechanical Load, 20 psi+weight (694 lb)

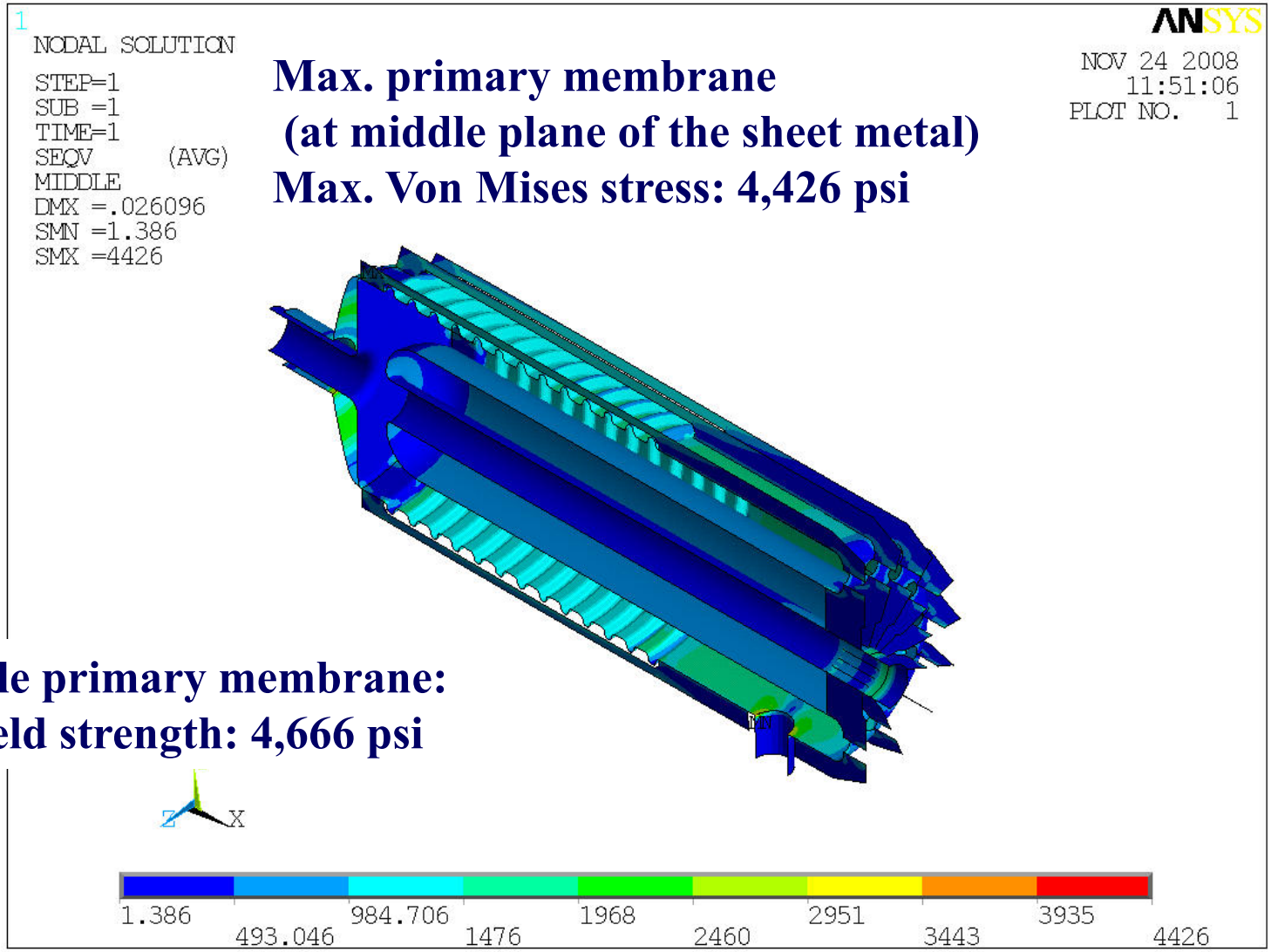

Max. primary membrane (at middle plane of the sheet metal)

Max. Von Mises stress: 4,426 psi

Allowable primary membrane: 2/3 of yield strength: 4,666 psi

psi

RF Cavity Under Mechanical Load, 20 psi+weight (694 lb)

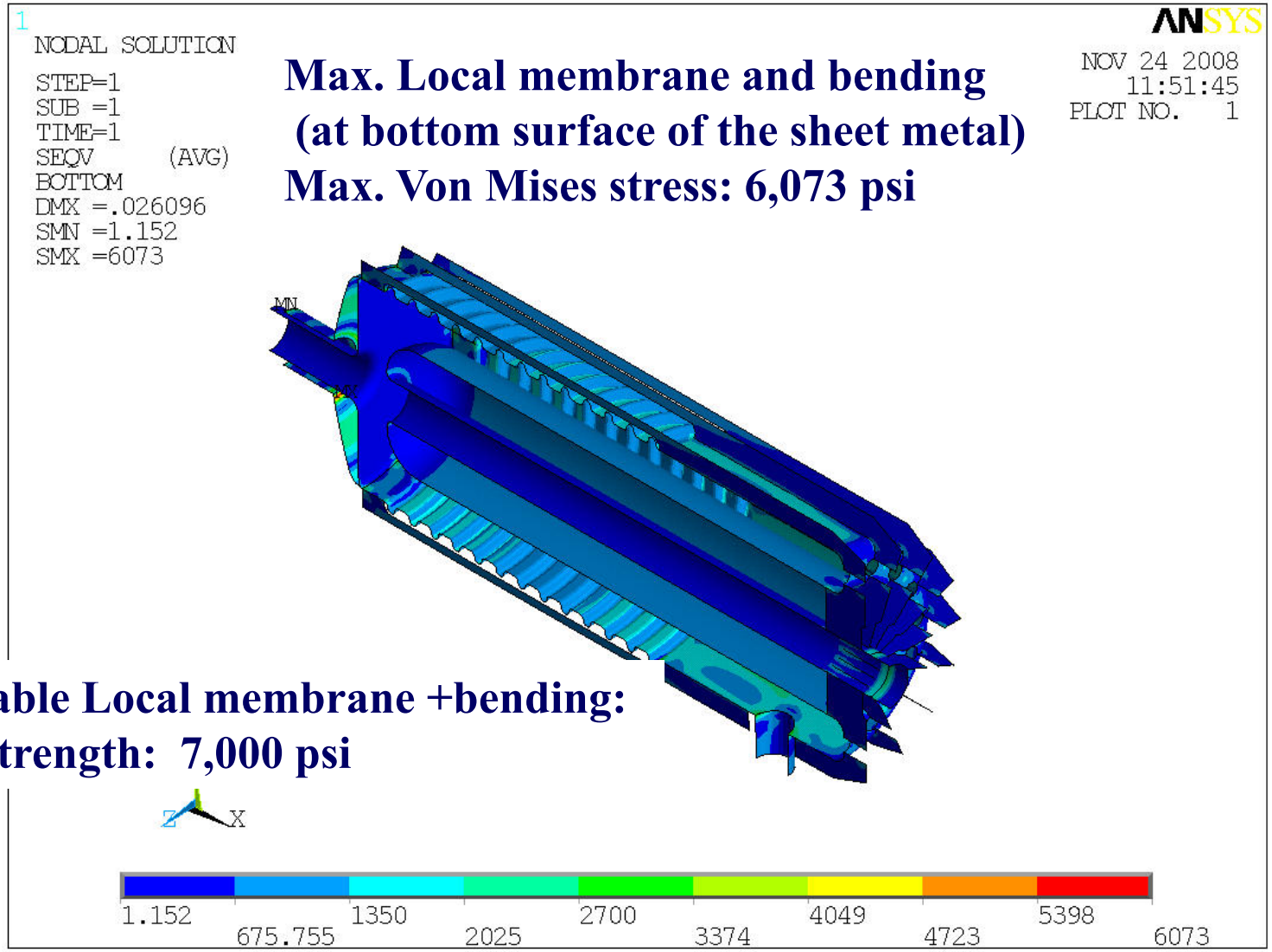

Max. Local membrane and bending (at bottom surface of the sheet metal)

Max. Von Mises stress: 6,073 psi

Allowable Local membrane +bending: yield strength: 7,000 psi

psi

Helium Vessel Under Mechanical Load, 20 psi+weight (694 lb)

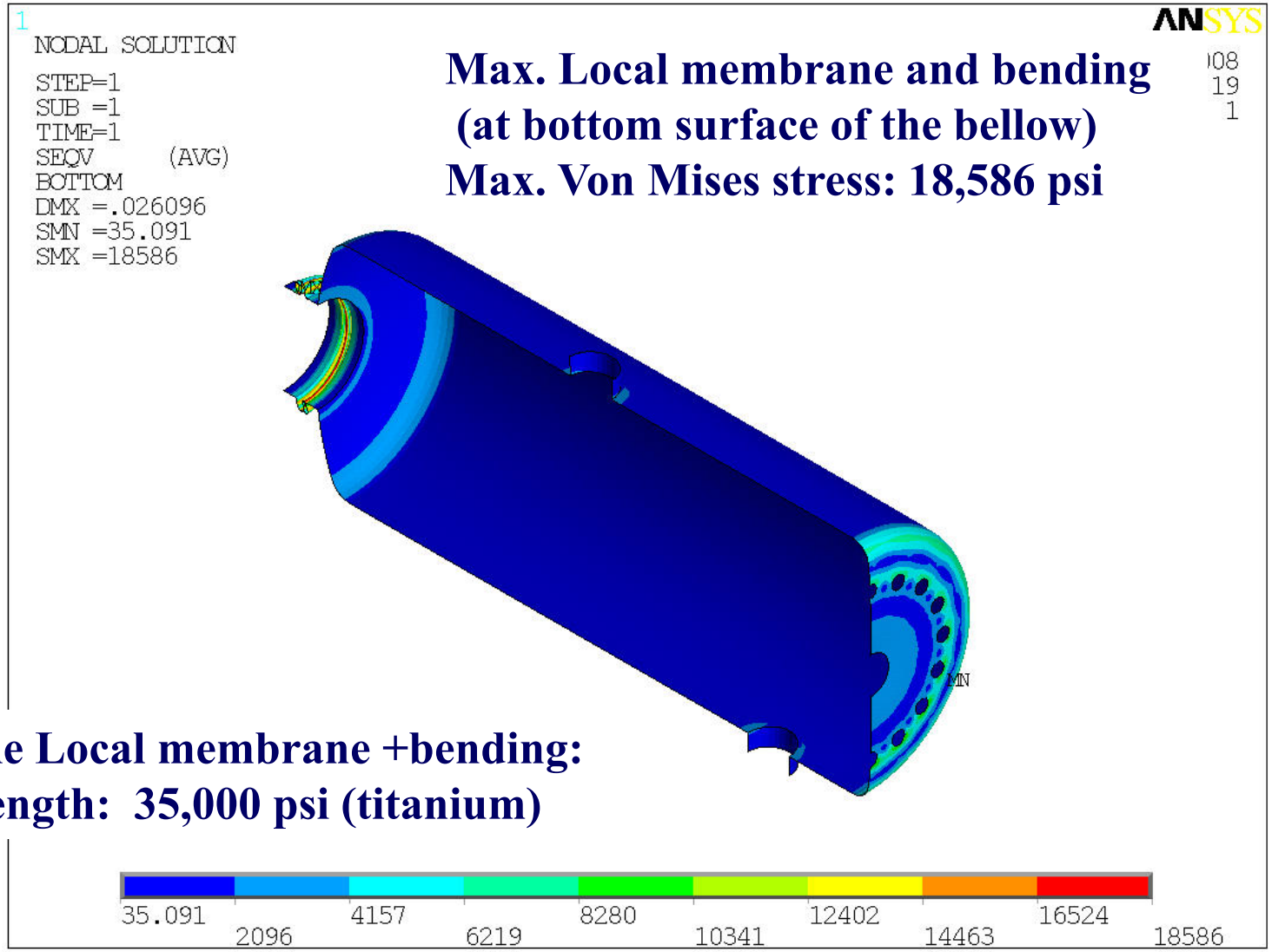

Allowable Local membrane +bending:
yield strength: 35,000 psi (titanium)

psi

Helium Vessel Under Mechanical Load, 20 psi+weight (694 lb)

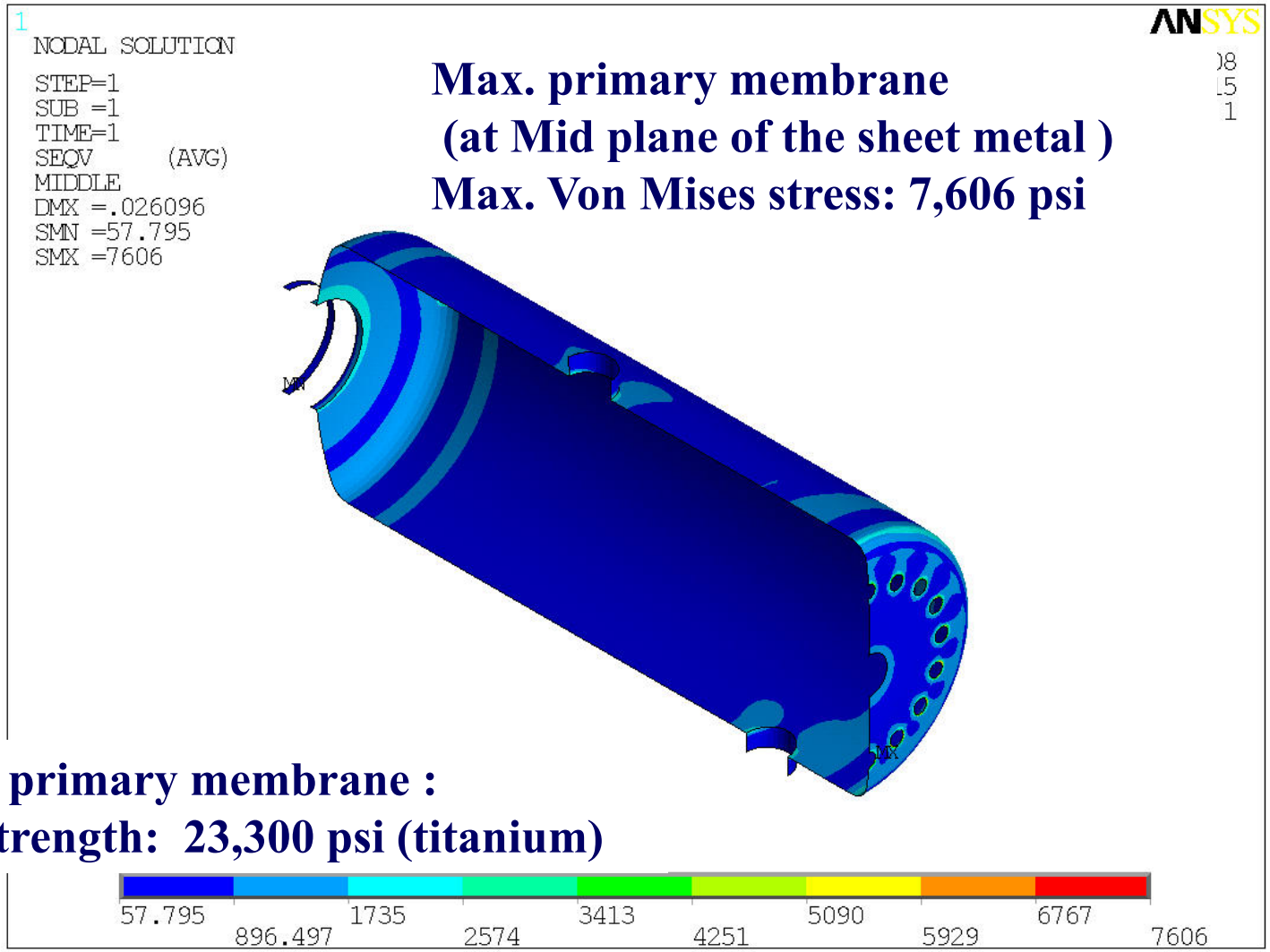

Max. primary membrane
(at Mid plane of the sheet metal)
Max. Von Mises stress: 7,606 psi

Allowable primary membrane :
2/3 yield strength: 23,300 psi (titanium)

psi

Helium Vessel Under Mechanical Load, 20 psi+weight (694 lb)

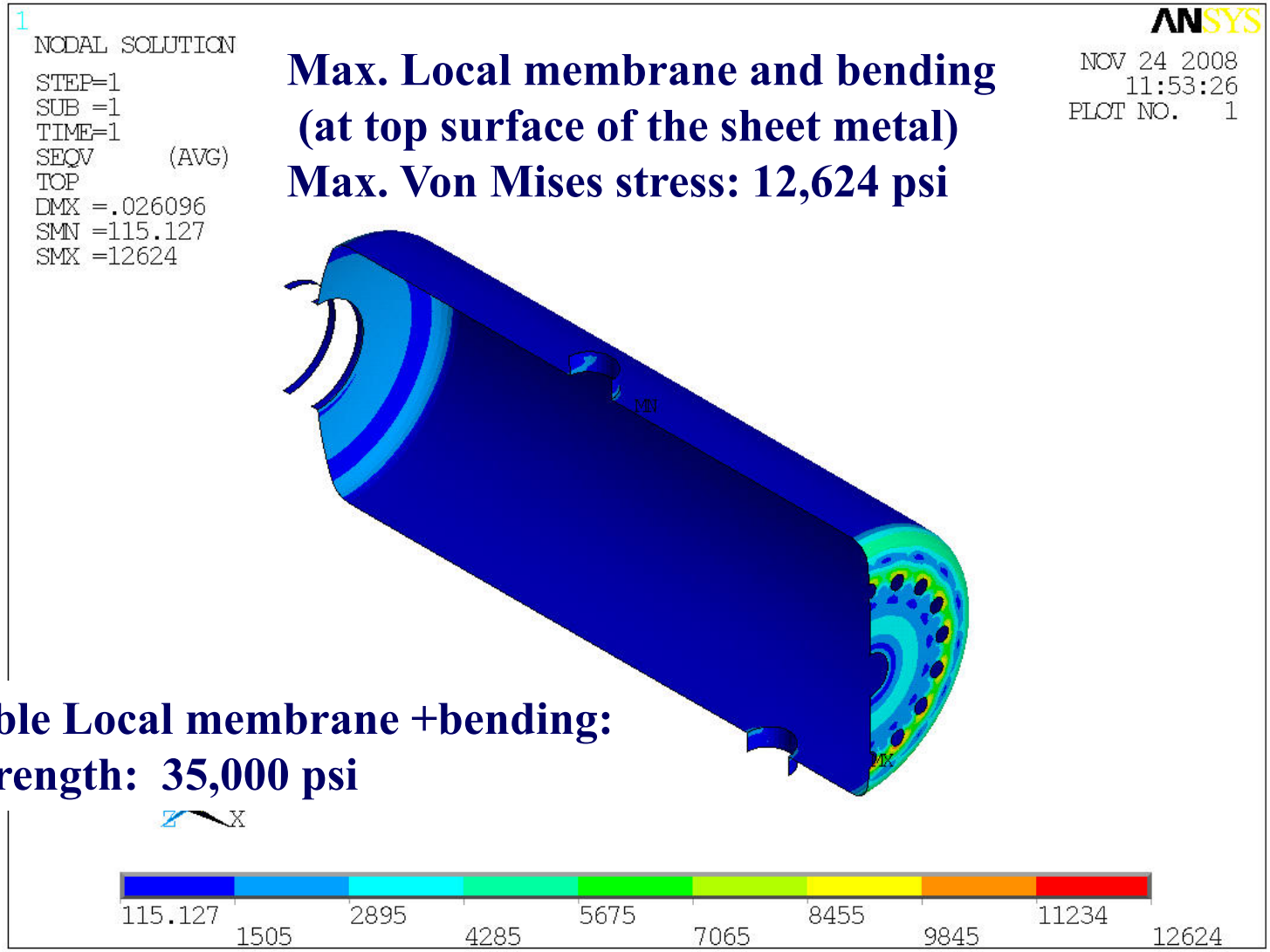

Max. Local membrane and bending (at top surface of the sheet metal)

Max. Von Mises stress: 12,624 psi

Allowable Local membrane +bending: yield strength: 35,000 psi

psi

RF Cavity Under Combined Load, Mechanical + Thermal

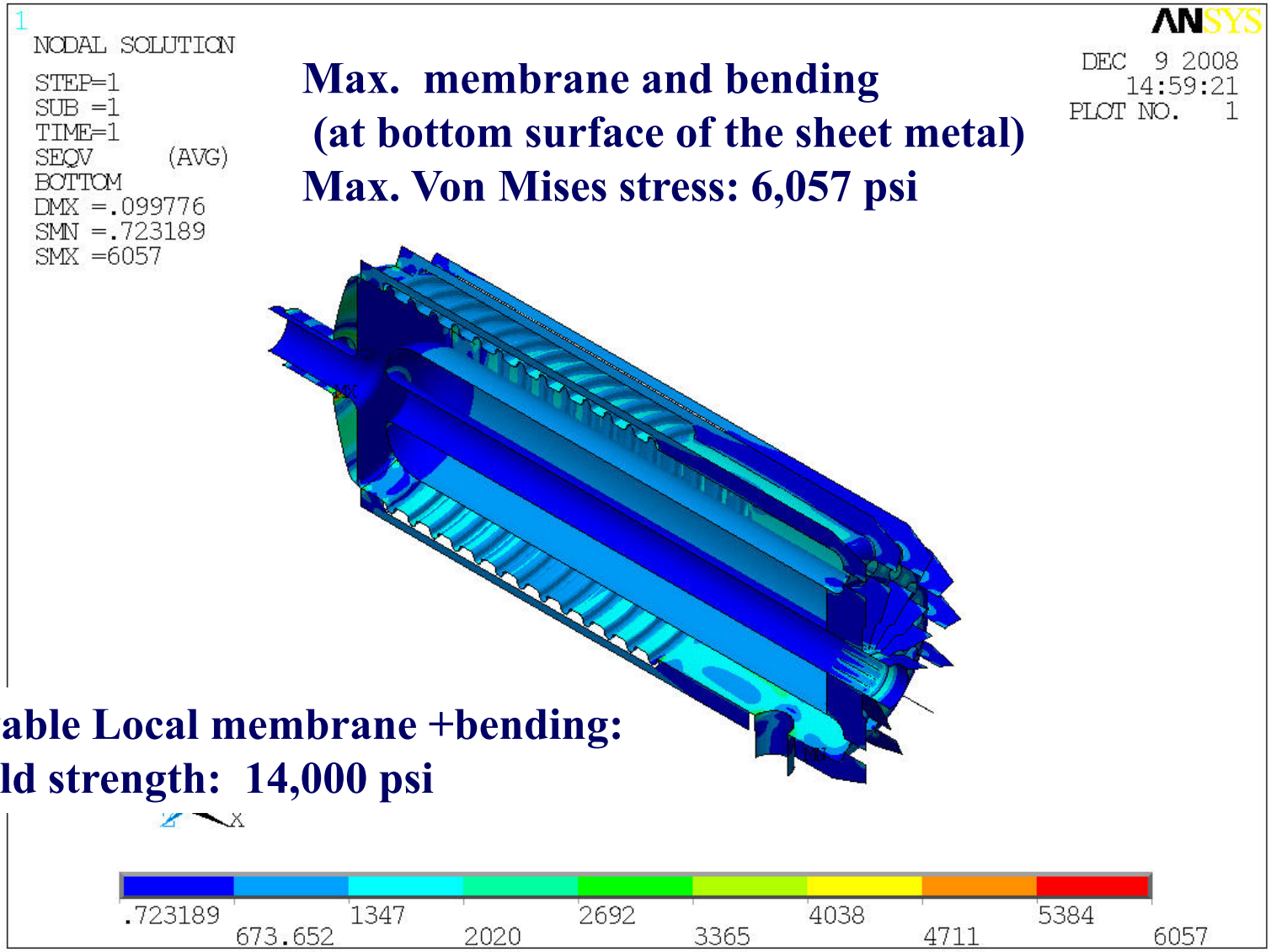

Max. membrane and bending (at bottom surface of the sheet metal)

Max. Von Mises stress: 6,057 psi

Allowable Local membrane +bending:
2x yield strength: 14,000 psi

psi

Helium Vessel Under Combined Load, Mechanical + Thermal

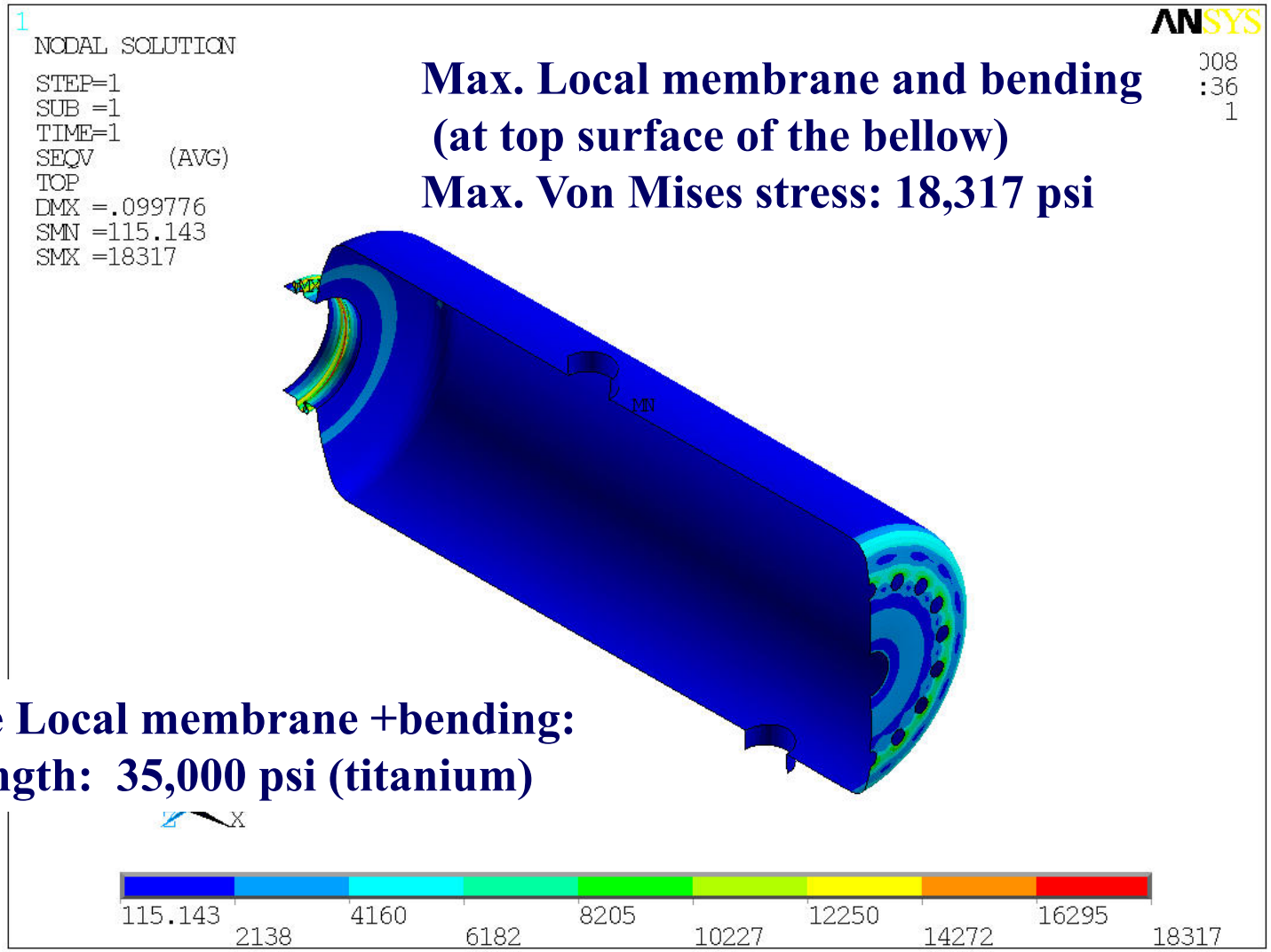

Max. Local membrane and bending (at top surface of the bellow)
Max. Von Mises stress: 18,317 psi

Allowable Local membrane +bending: yield strength: 35,000 psi (titanium)

psi

Helium Vessel Under Combined Load, Mechanical + Thermal

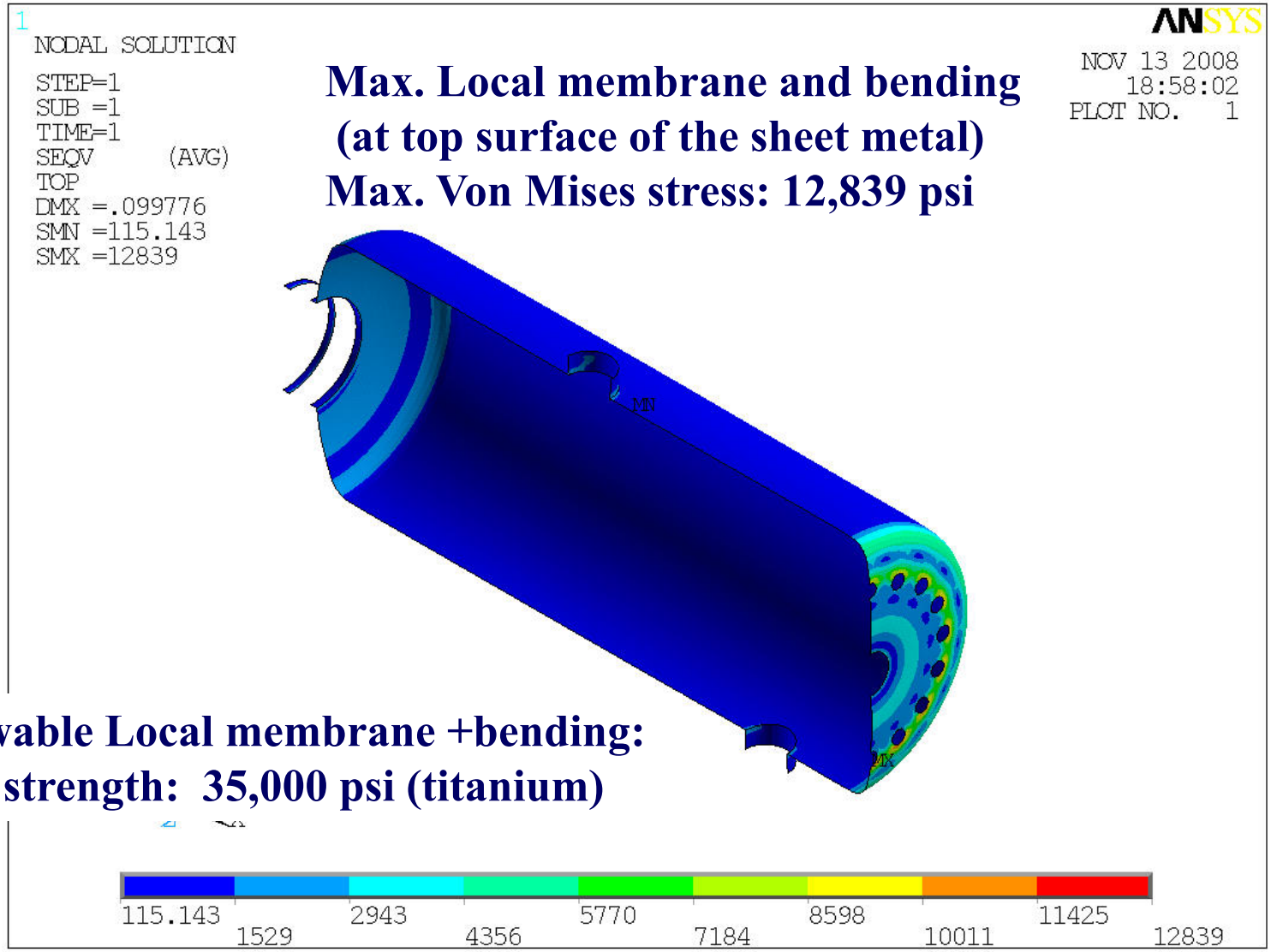

Max. Local membrane and bending (at top surface of the sheet metal)
Max. Von Mises stress: 12,839 psi

Allowable Local membrane +bending: yield strength: 35,000 psi (titanium)

psi

Buckling Analysis, First Mode Shape of Eigen Buckling

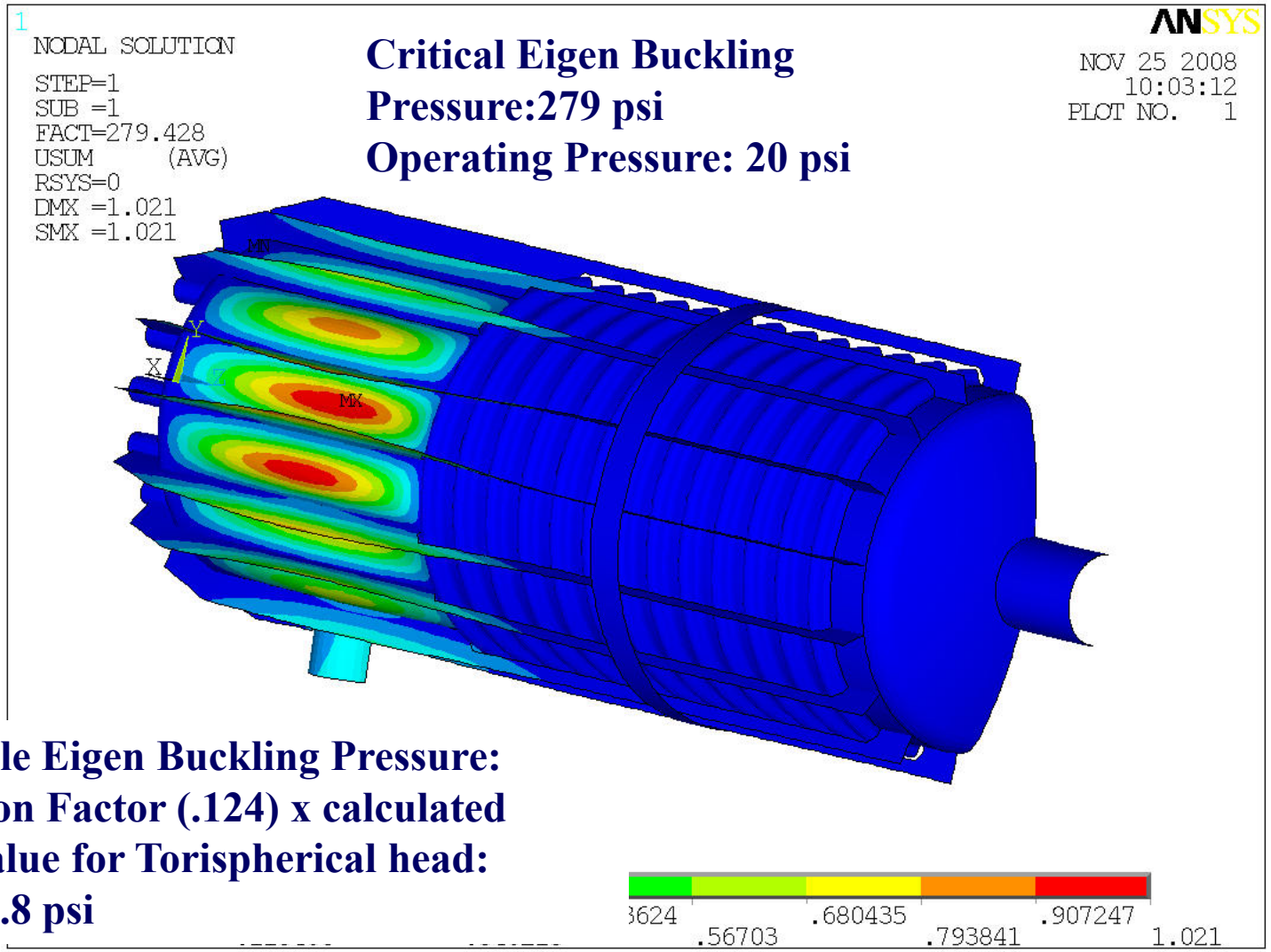

Critical Eigen Buckling Pressure:279 psi

Operating Pressure: 20 psi

Allowable Eigen Buckling Pressure: Reduction Factor (.124) x calculated Eigen value for Torispherical head: Pcr = 34.8 psi

Fatigue Evaluation

The 56 MHz RF cavity meets the following ASME AD160 condition That fatigue analysis is not needed

1. Condition A: Minimum tensile stress is not exceeding 80,000 psi.
2. Total expected number of cycles of type (a) plus type (b) plus type (c) plus type (d) does not exceed 1000.

Type (a): the expected number of full range pressure cycles including start up and shut down. (4x 20 years)

Type (b): the expected number of operating pressure cycles in which the range of pressure variation exceeds 20% of design pressure. (0)

Type (c): the effective number of change in metal temperature between any two adjacent joints. (same as start up, 4x 20 years)

Type (d): the number of temperature cycles for component involving welds between material having different coefficient of expansion is that which causes the value of (alpha1-alpha2) x del T to exceed .00034. (same as start up, 4 x 20 years)

Total cycle number=(a)+(b)+(c)+(d)= 240. The projected cycle number of 56 MHz RF cavity operation won't exceed 1000. Fatigue analysis is not needed.

Summary of ASME Code Compliance

1. **Stress Induced by Mechanical Load (pressure+weight)**
   a. Maximum Primary membrane: (at Middle plane of shell)
      RF cavity: 4,426 psi Allowable: 4,666 psi
      Helium Vessel: 7,606 psi Allowable: 23,300 psi
   b. Maximum Local Membrane and Bending:
      (at either top or bottom shell surfaces)
      RF cavity: 6,073 psi Allowable: 7,000 psi
      Helium Vessel: 12,624 psi Allowable: 35,000 psi
2. **Stress Induced by Combined load (mechanical + thermal)**
   Maximum Local Membrane and Bending:
   (at either top or bottom shell surfaces)
   RF cavity: 6,057 psi Allowable: 14,000 psi
   Helium Vessel: 12,839 psi Allowable: 35,000 psi
3. **Allowable Critical Buckling Pressure: 34.8 psi. Operating pressure: 20 psi**
4. **Fatigue Evaluation: Total cycle number < 1000. No fatigue concern.**

Natural Vibration Frequency First Mode (Without Stiffeners)

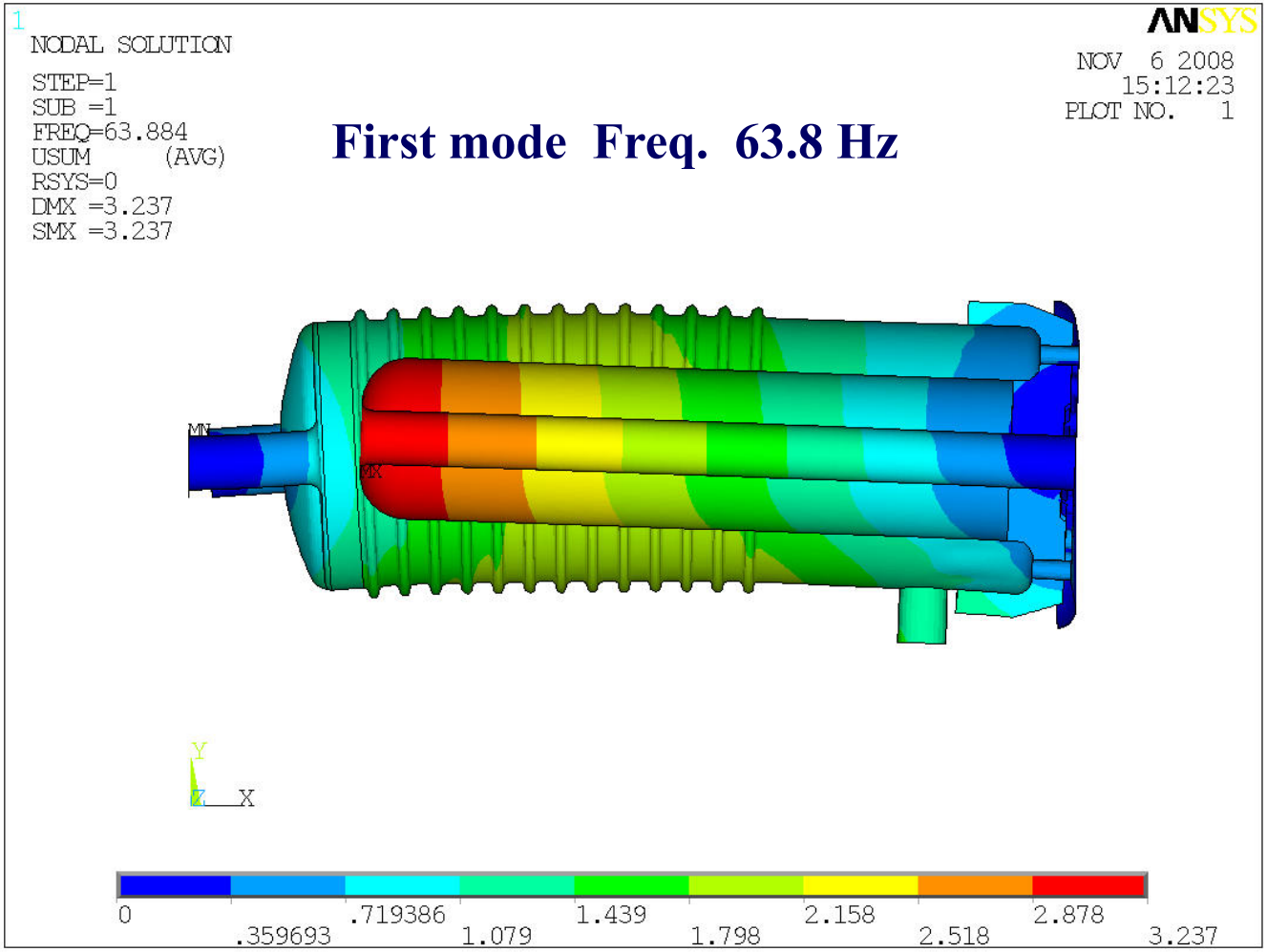

Natural Vibration Frequency First Mode (With Stiffeners)

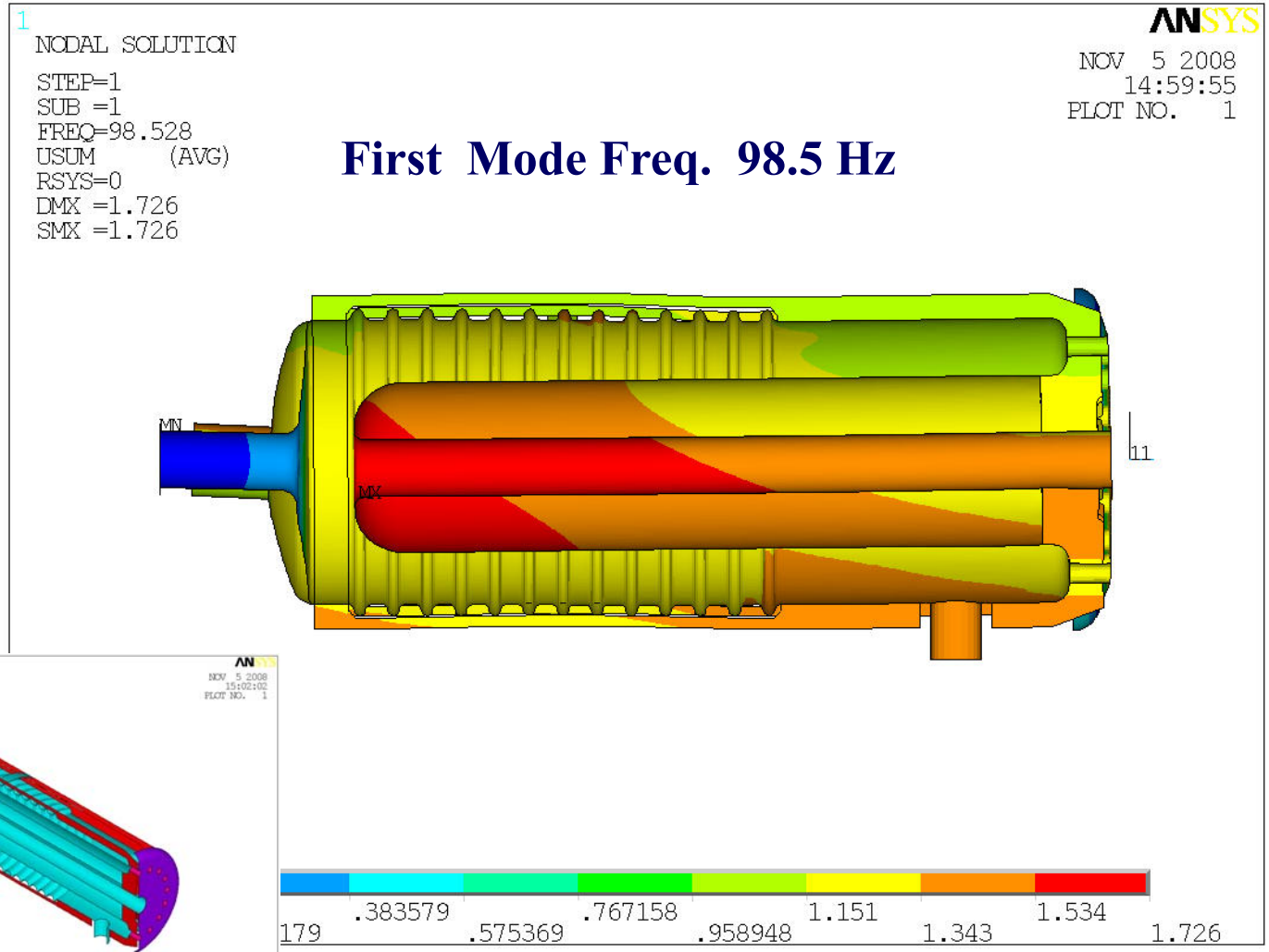

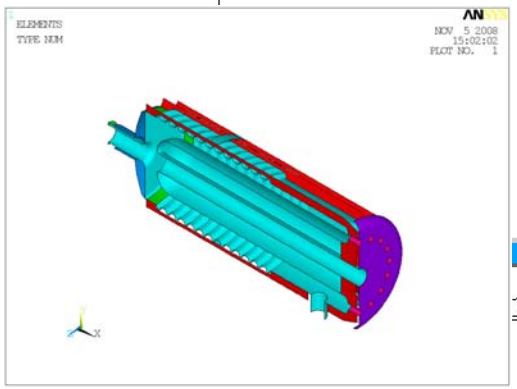

Natural Vibration Frequency Second Mode (With Stiffeners)

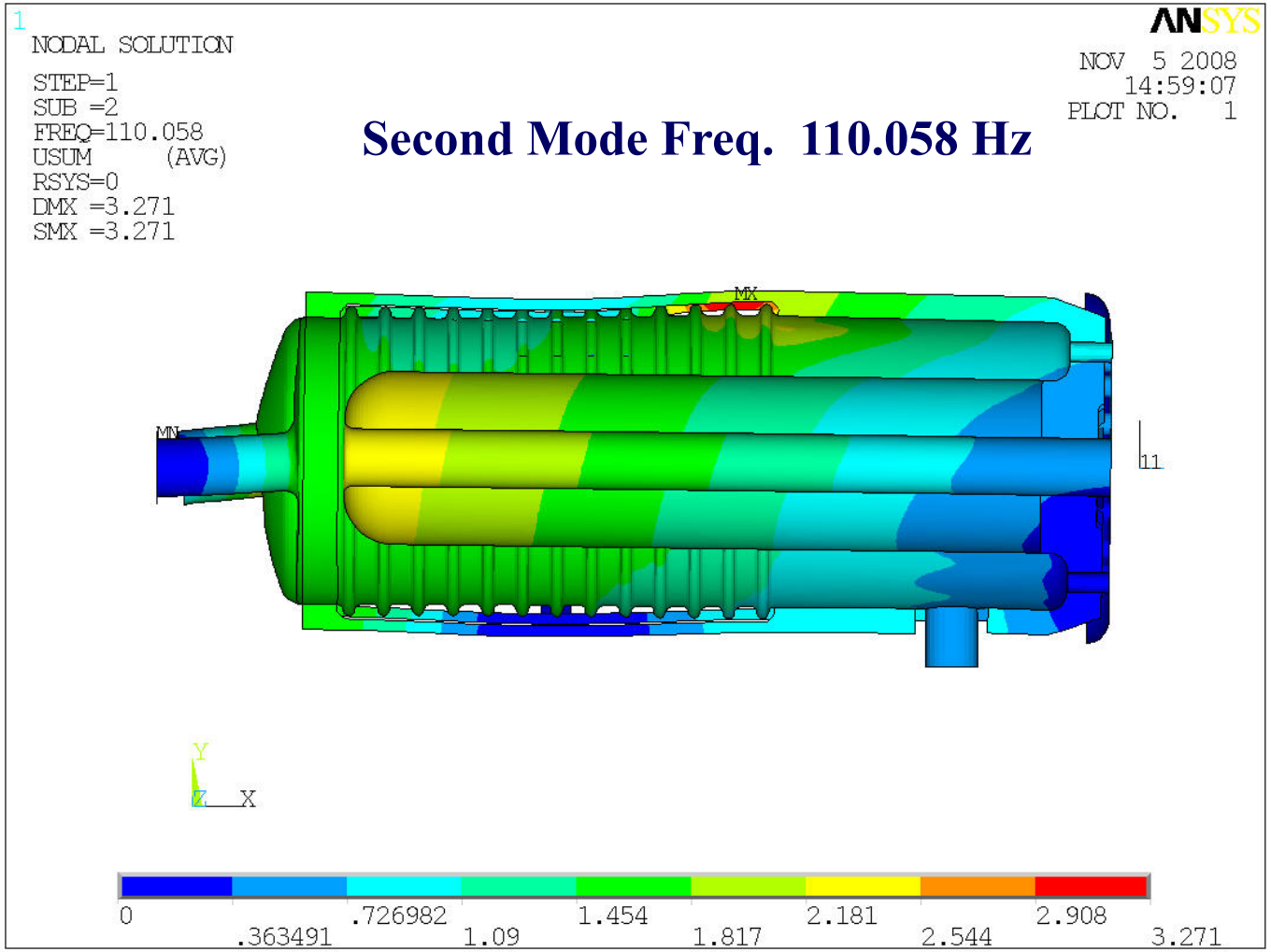

RF Frequency Sensitivity to Helium Pressure Fluctuation

Fluctuation of helium pressure will change the shape of the RF cavity vessel. When the shape of the cavity changes the resonance frequency will change too.

A stiffened RF cavity will reduce its sensitivity to helium pressure fluctuation.

Parameters used in calculation:

Resonance frequency at Free state:
56304426.49372 Hz (calculated by ANSYS model)
Applied Helium Pressure: 1 atm (1.013 bar)
Helium stability: +/- 1 mbar

Model Used In RF Frequency Sensitivity Calculation

Finite Element program: ANSYS Multiphysics

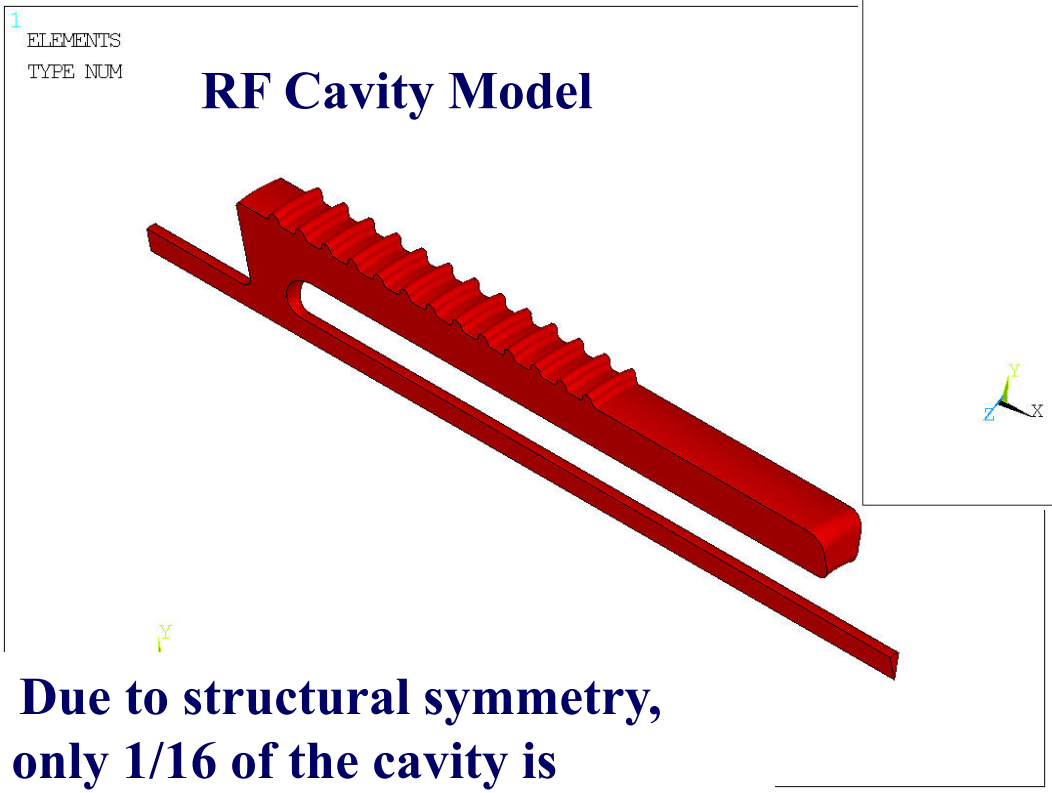

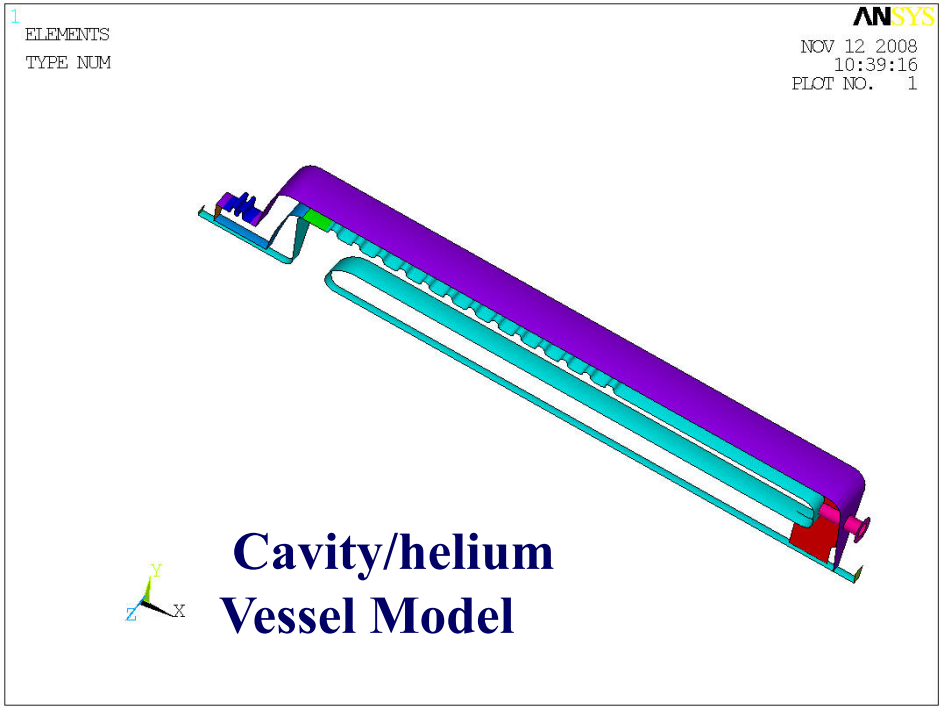

Due to structural symmetry, only 1/16 of the cavity is modeled to calculate the Resonance frequency

Electric Field (E) Plot at Free State RF Resonance Frequency

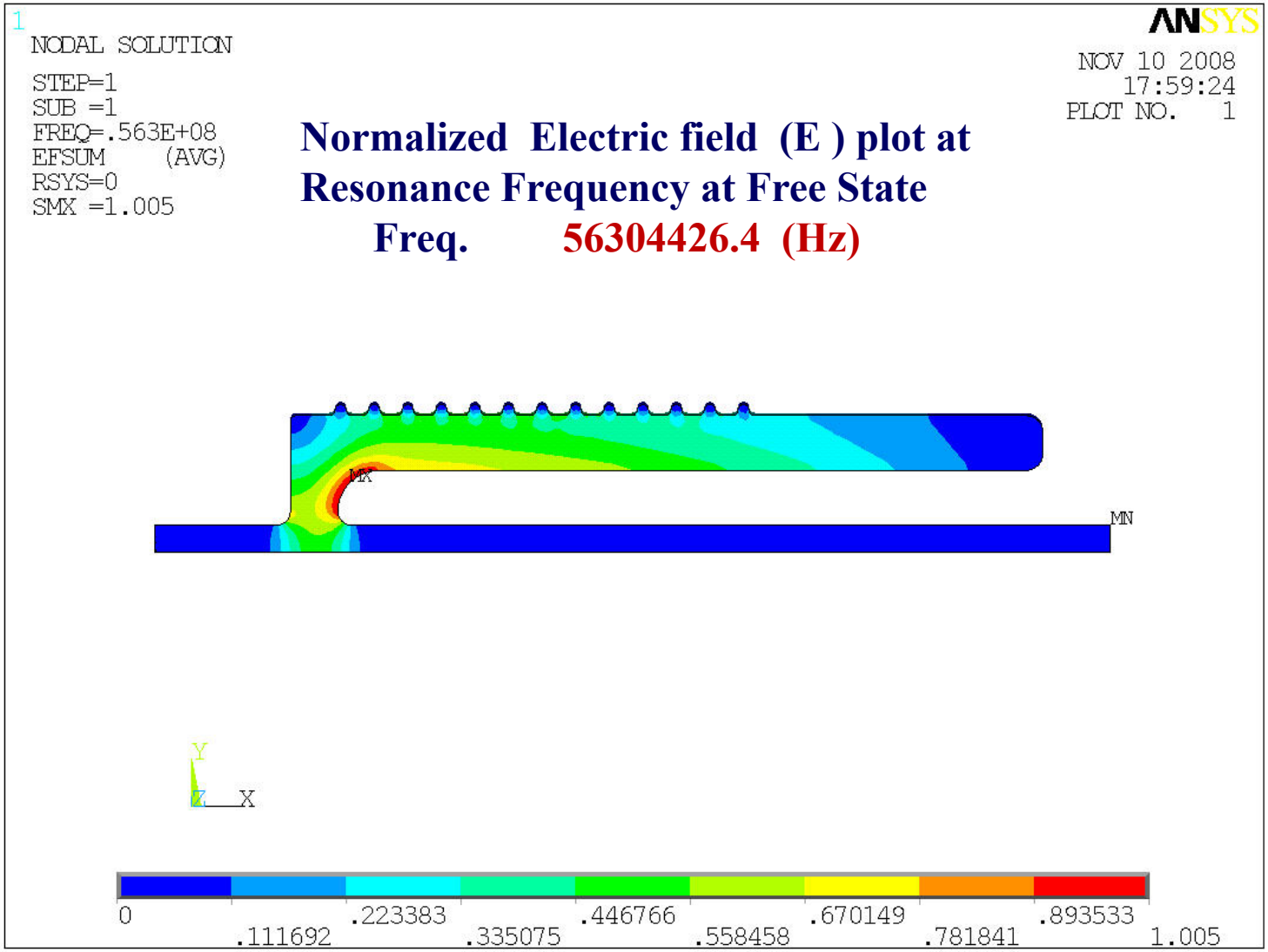

Deform Shape of RF Cavity Due to Helium Pressure (1 atm)

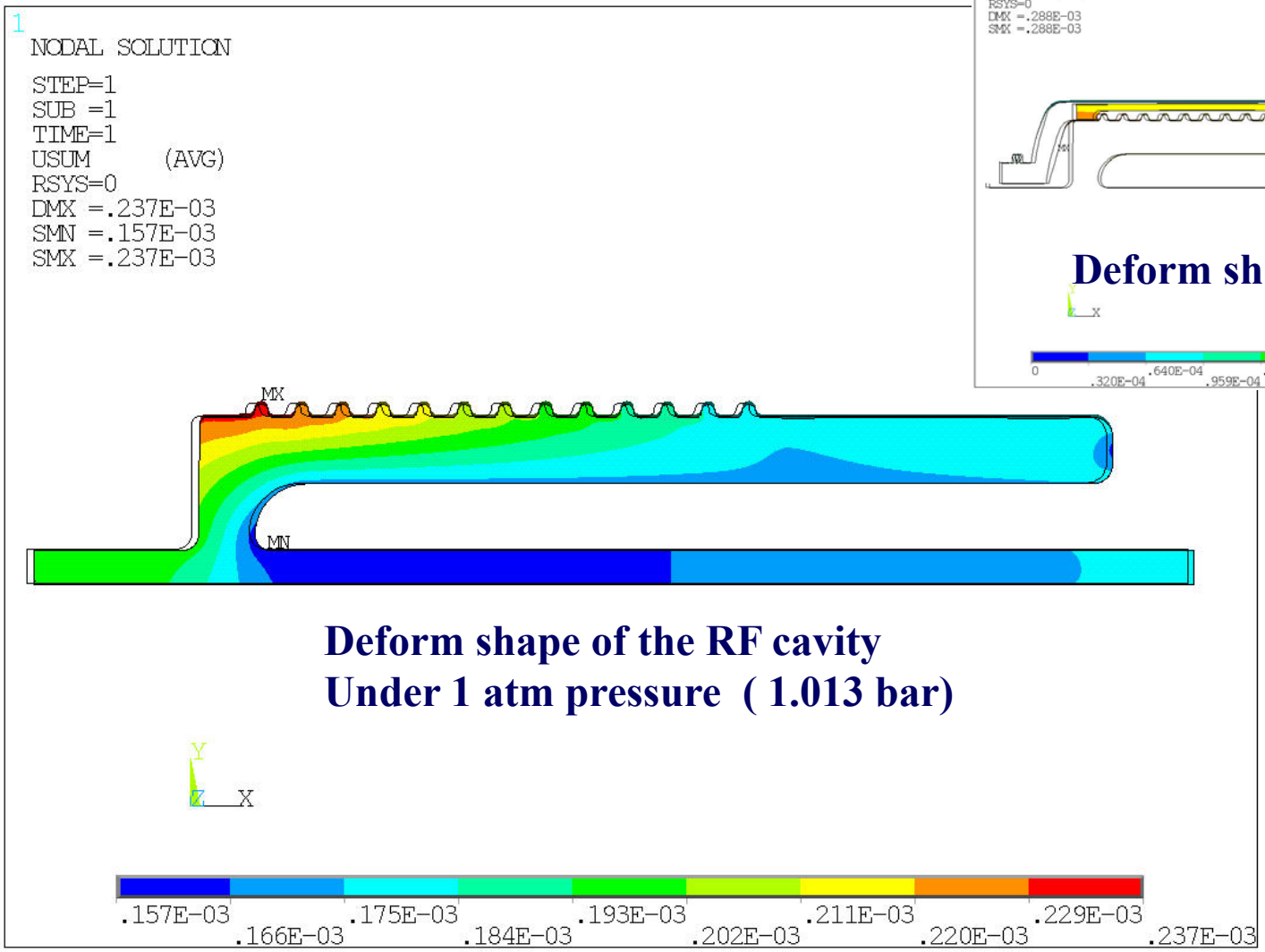

Deform shape of the RF cavity
Under 1 atm pressure (1.013 bar)

Unit in meter

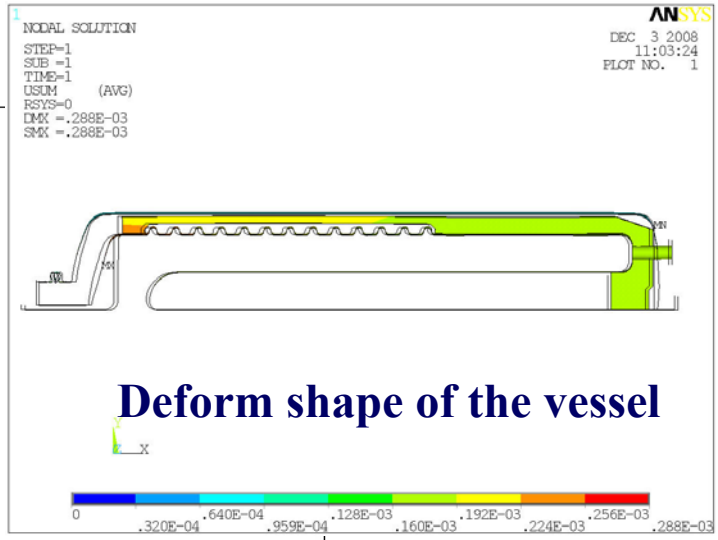

Deform shape of the vessel

Unit in meter

RF Sensitivity Due To Helium Pressure Fluctuation

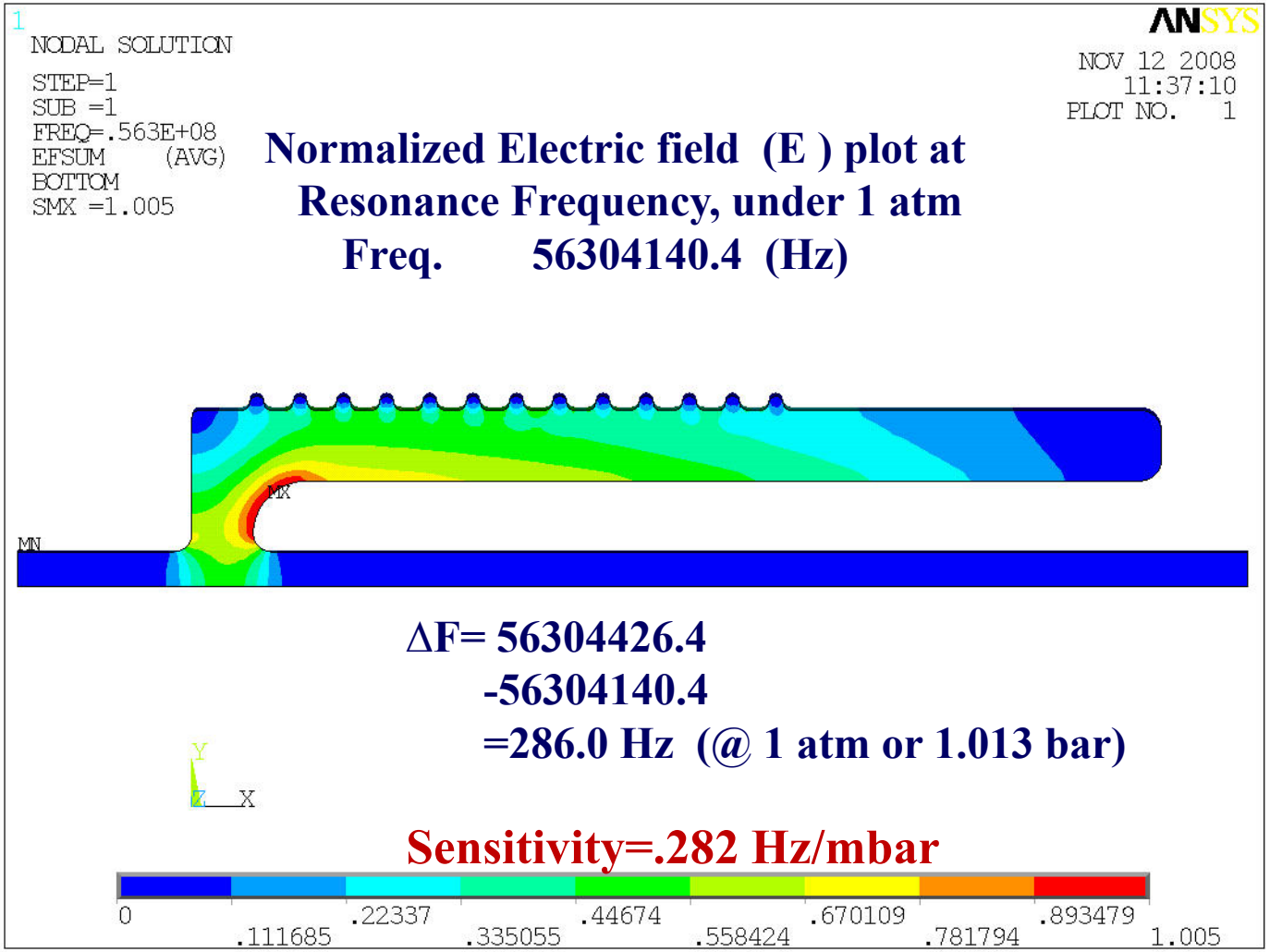

Normalized Electric field (E) plot at Resonance Frequency, under 1 atm

Freq. 56304140.4 (Hz)

ΔF= 56304426.4
-56304140.4
=286.0 Hz (@ 1 atm or 1.013 bar)

Sensitivity=.282 Hz/mbar

RF Frequency Change Due To Lorentz Detuning

Lorentz Pressure:

During operation, magnetic field and electric field will produce pressure in the RF cavity wall.

Pressure from Magnetic field:

$P = \frac{1}{4} \mu_o H^2$, μ_o is permeability of vacuum

Direction: push out the RF cavity wall.

Pressure from Electrical field:

$P = \frac{1}{4} \varepsilon_o E^2$, ε_o is permittivity of vacuum

Direction: Pull in the RF cavity wall.

Total Lorentz Pressure:

$$P = \frac{1}{4} (\mu_o H^2 - \varepsilon_o E^2)$$

RF Cavity Surface Electrical Field Vector

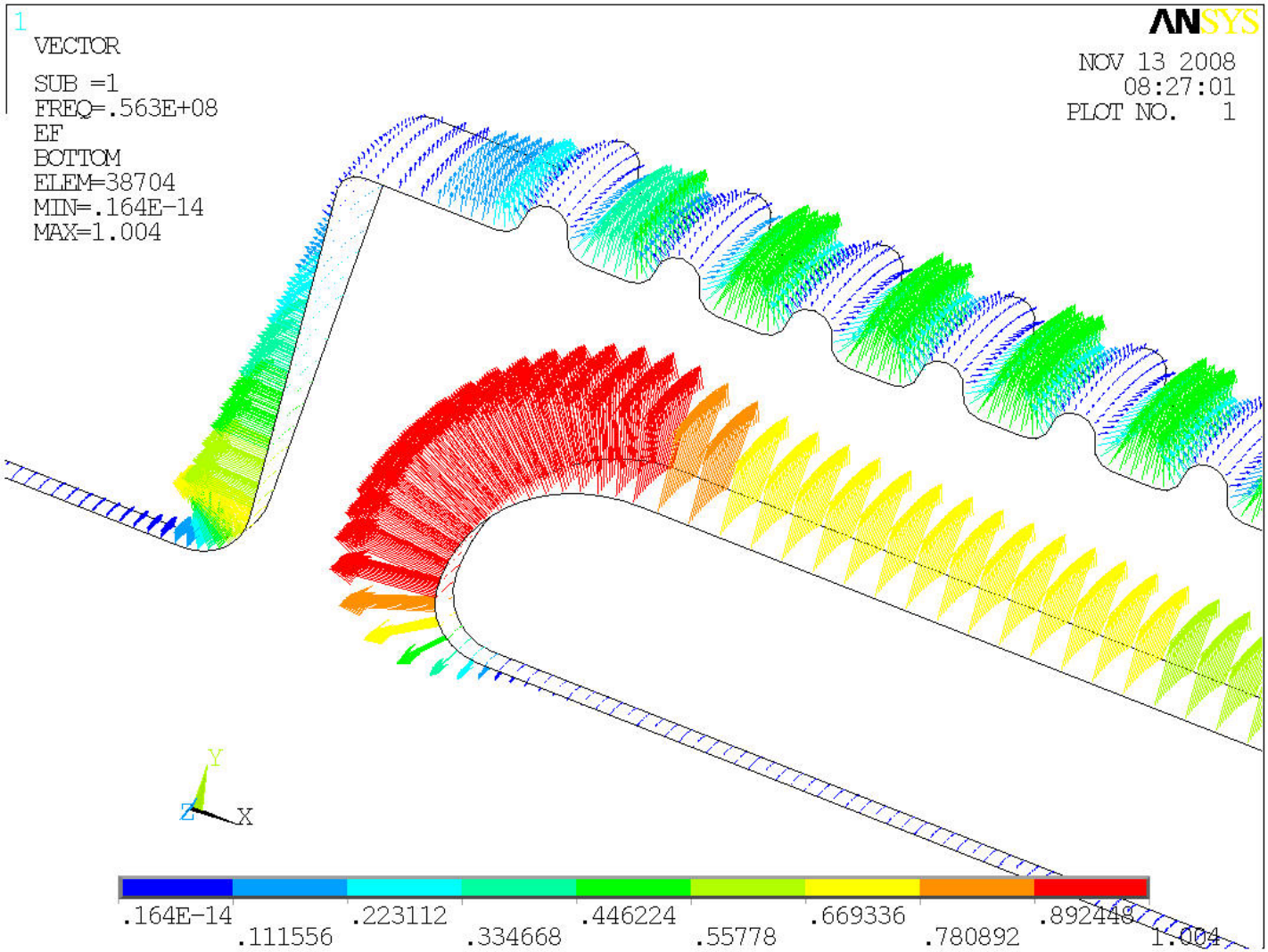

RF Cavity Surface Magnetic Field Vector

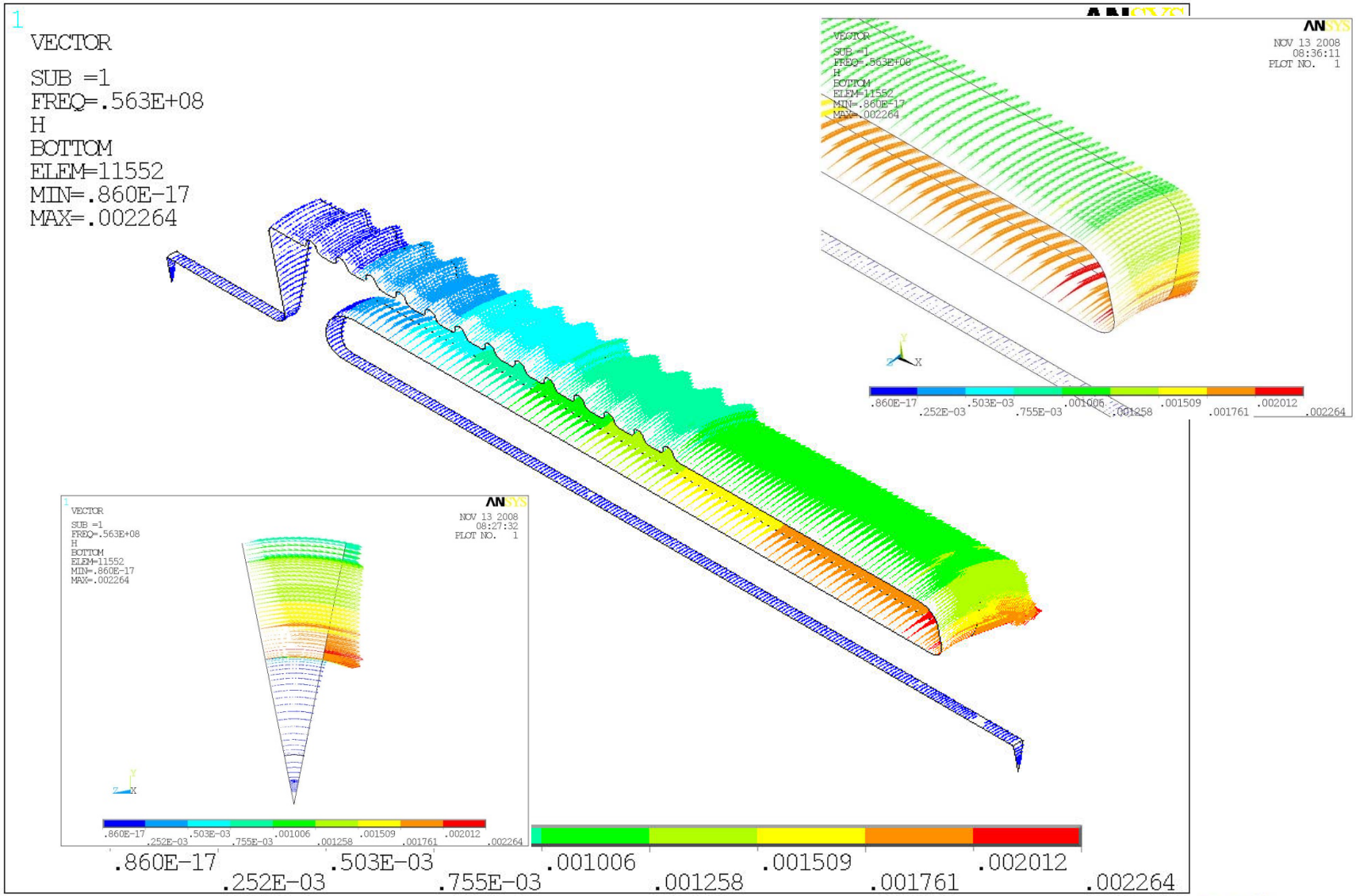

Lorentz Pressure

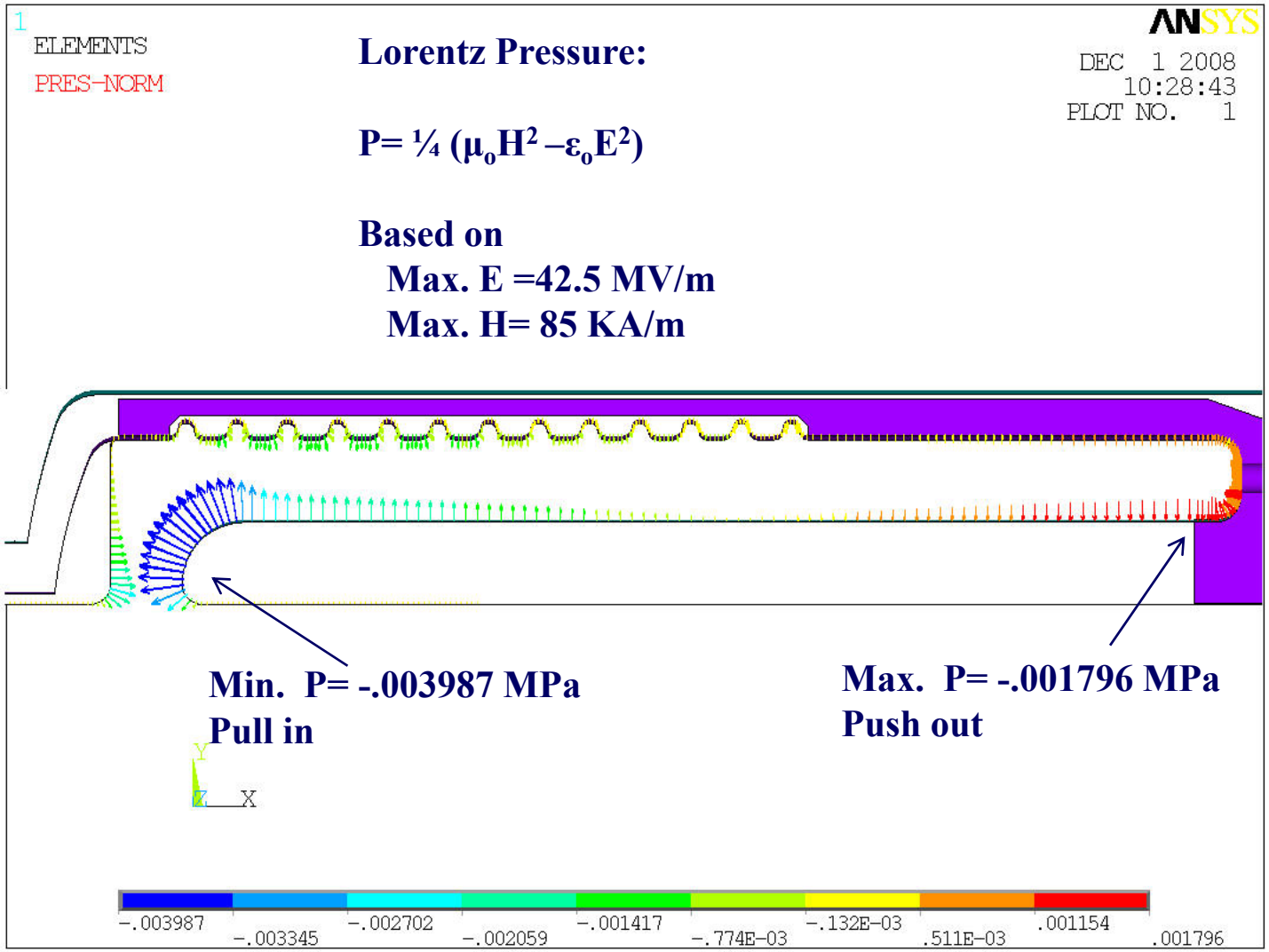

Pressure unit: MPa

Deform Shape of RF Cavity Due to Lorentz Pressure

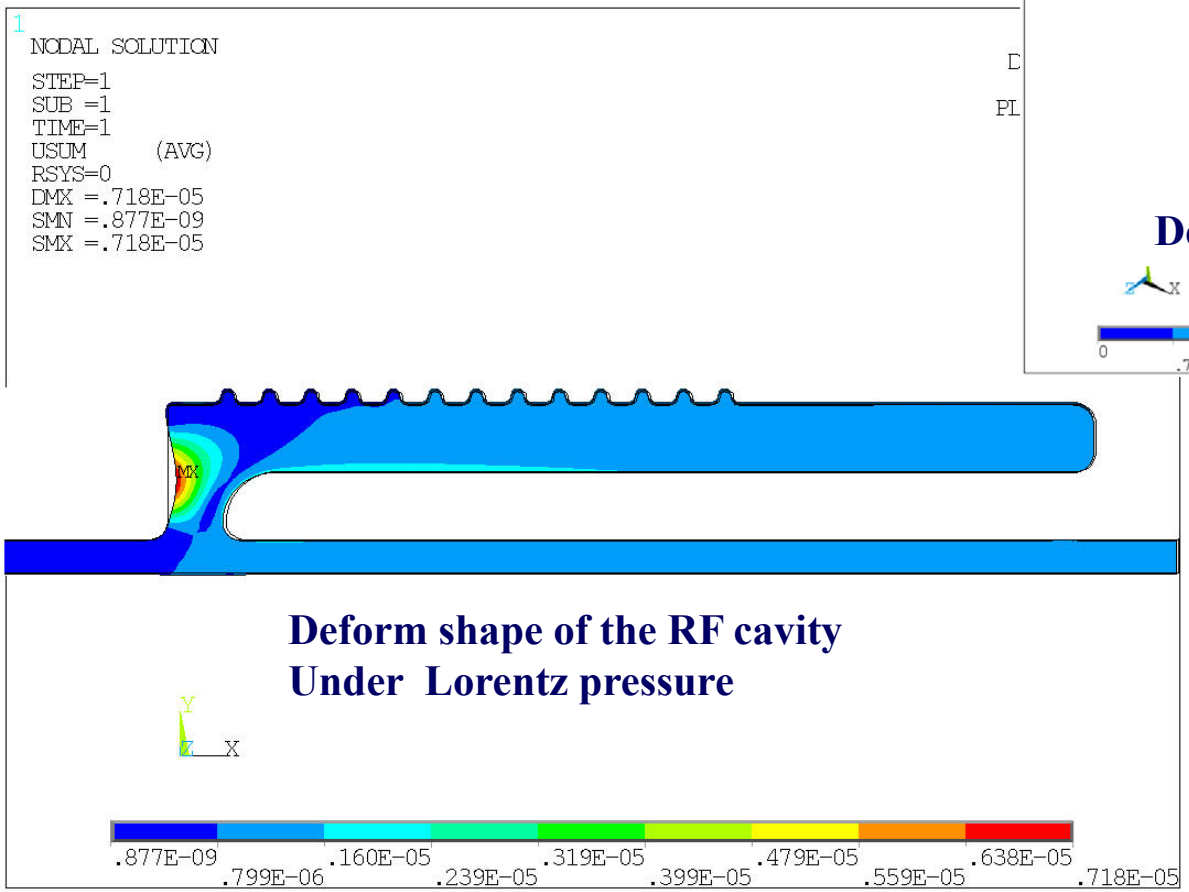

Deform shape of the RF cavity
Under Lorentz pressure

Unit in meter

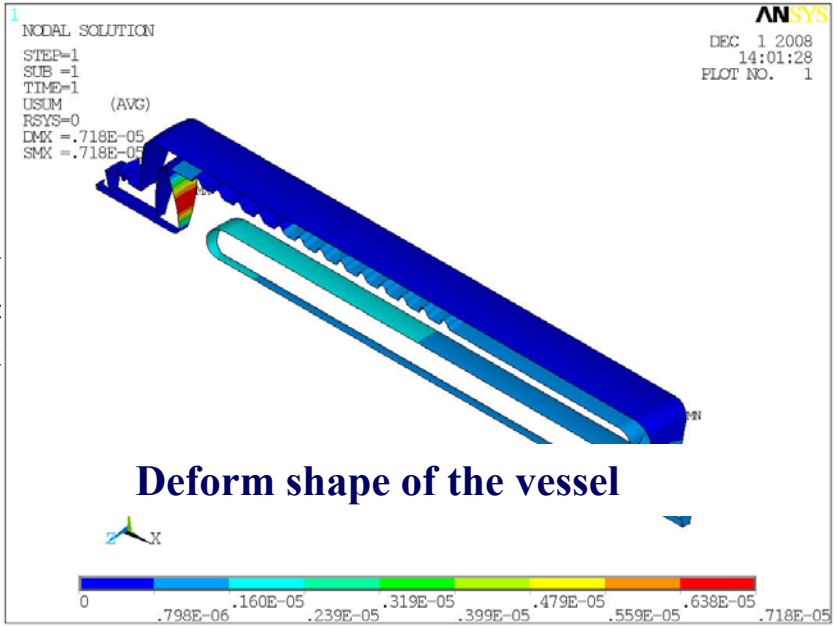

Deform shape of the vessel

Unit in meter

RF Frequency Change Due To Lorentz Detuning

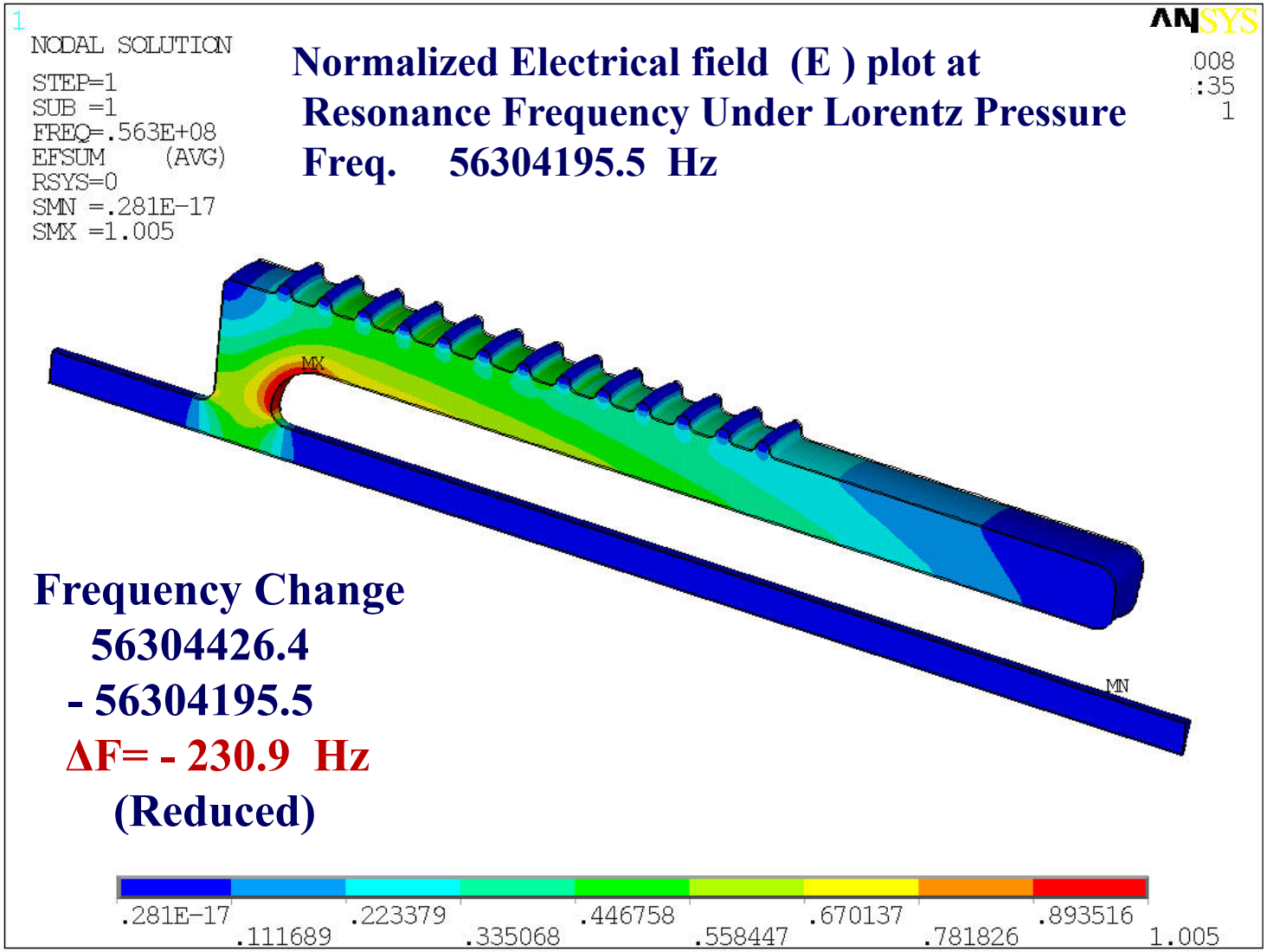

Normalized Electrical field (E) plot at Resonance Frequency Under Lorentz Pressure

Freq. 56304195.5 Hz

Frequency Change

56304426.4

- 56304195.5

ΔF= - 230.9 Hz

(Reduced)

Summaries of Structure Design

1. Feasible and Reliable Structure

2. Easy and Controllable Mechanical Tuning capability

3. ASME Pressure Vessel Code Compliance

4. High Natural vibration Frequency, 98.5 Hz

5. Low Sensitivity to Helium Pressure Fluctuation < .282 Hz/mbar

6. Lorentz Detuning, -230.9 Hz At Full voltage.
   The detune frequency will be further reduced by local stiffening

The RHIC 56 MHz SRF Cavity Tuner Design

C. Pai
Collider-Accelerator Department

Mechanical Tuning of RF Cavity Resonance Frequency

The mechanical tuning of the RF cavity resonance frequency will be achived by physically push or pull the upper part of the SRF cavity (tuning plate) to change the gap distance of the SRF cavity. A tuning mechanism mounted on the helium vessel will provide both fast and slow tuning for the SRF cavity to change its fundamental resonance frequency. The tuner plate is an internal structure of the RF cavity vessel. A pressure is over the tuner plate to take helium pressure. The tuner plate is free from helium and vacuum pressure.

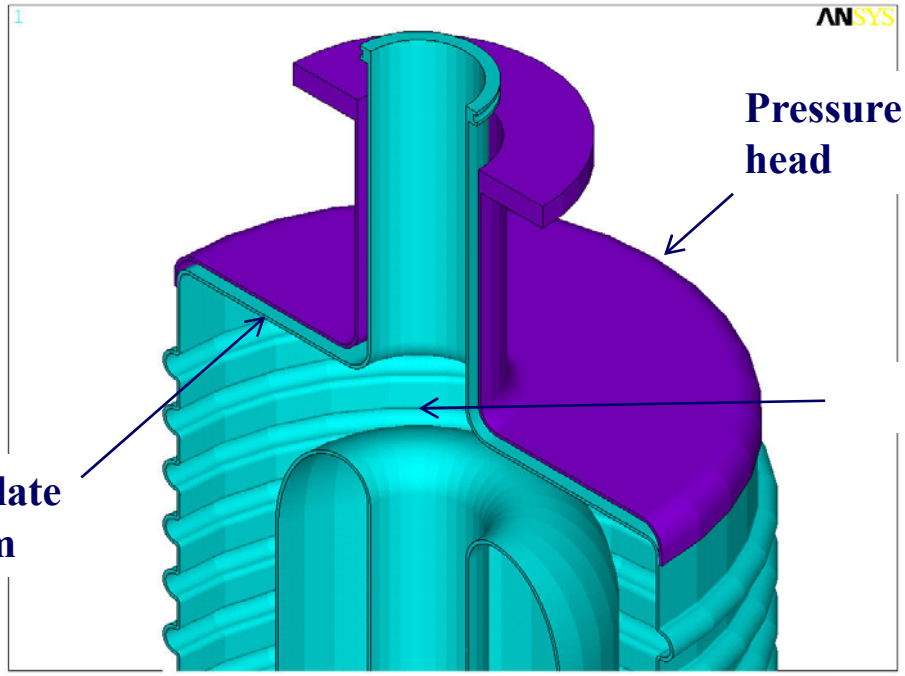

Tuning Plate Deflection And Stress Analysis:

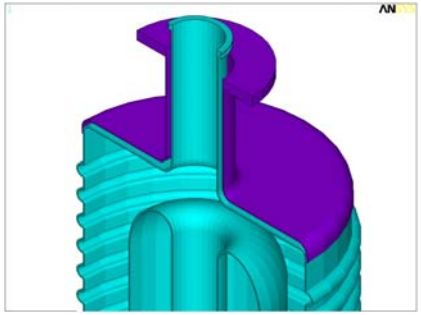

Material Properties:

Pure Niobium
Thickness: 3.0 mm (.118 in)
Young's modulus: $E=15.0 \times 10^6$ psi.
Yield strength: 7,000
(.2% Yield or Strain ε=.002)
Tensile Strength: 30,000 psi
Plastic property: Bi-linear kinematic, Includes Work hardening.
Tangent modulus beyond elastic limit:
23,333 psi. (Based on 30% elongation, ε=.30)

Tuning Type:

Elastic tuning:

Deflection: 1.5 mm

Plastic tuning: (If needed)

Deflection 6.0 mm

Elastic tuning after plastic tuning:

deflection: 1.5 mm

Elastic Deflection, Von Mises Stress Plot

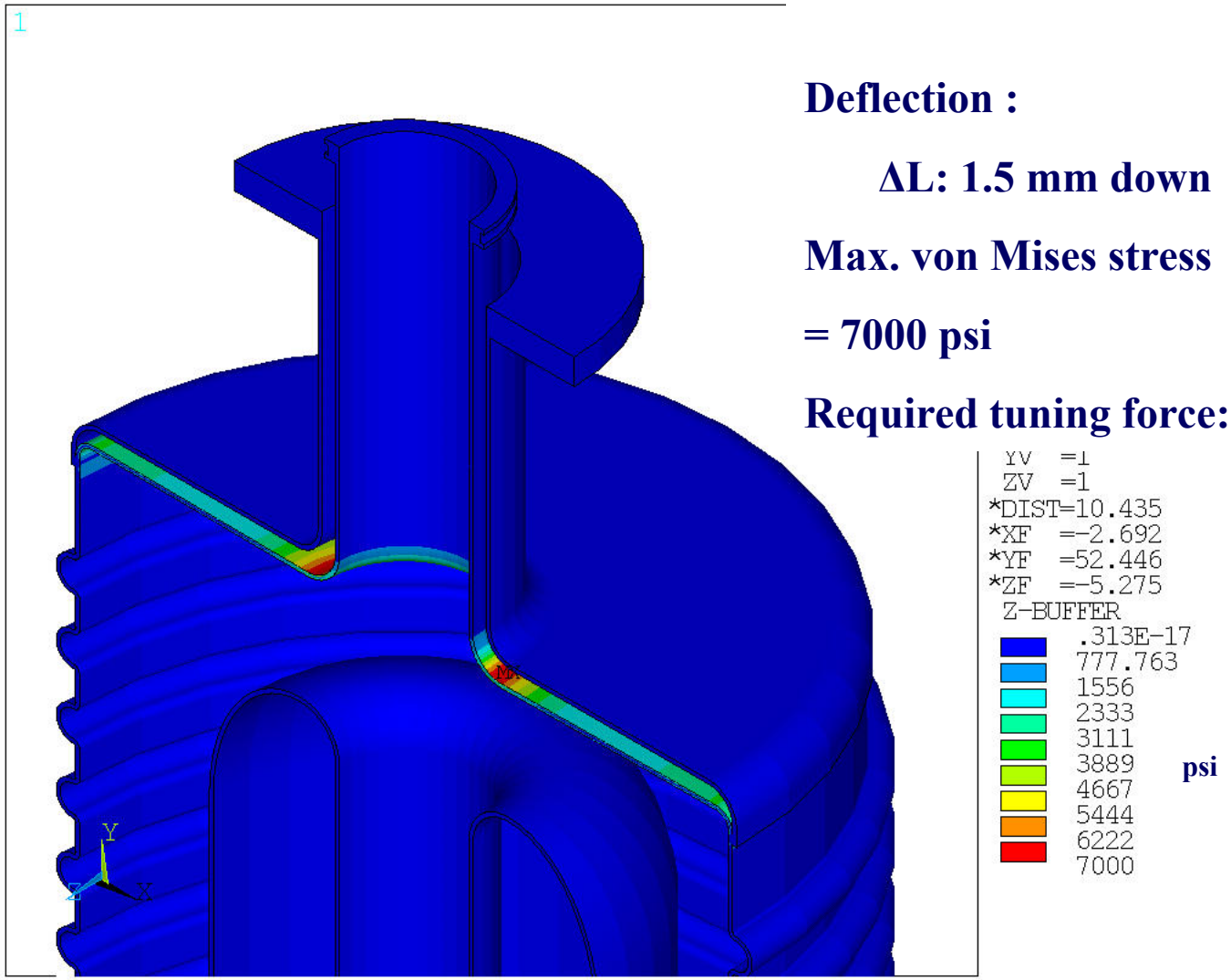

Deflection :

ΔL: 1.5 mm down

Max. von Mises stress

= 7000 psi

Required tuning force: F=139 lb

Plastic Deflection, Push Down 6 mm, Von Mises Stress Plot

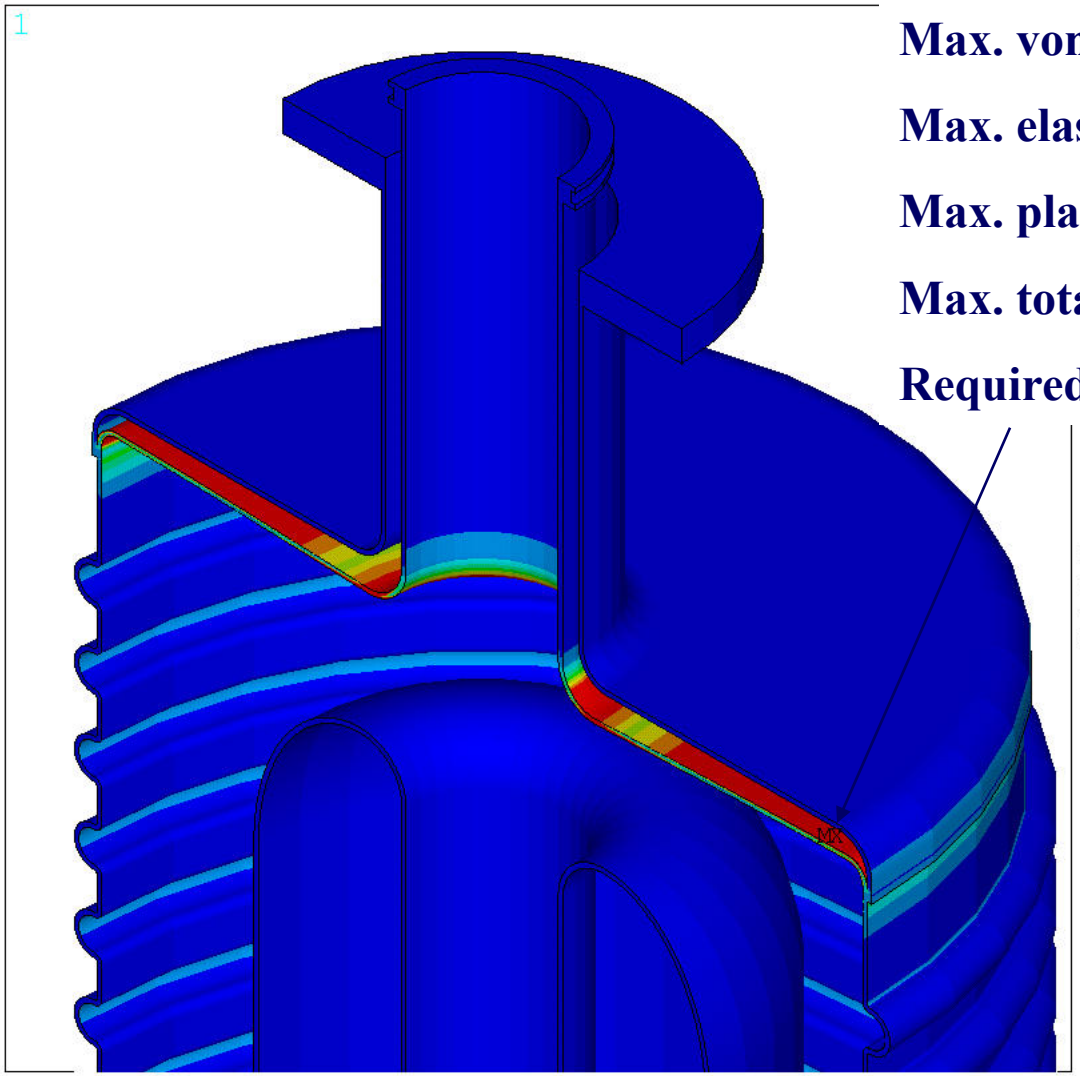

Max. von Mises stress= 7,587 psi

Max. elastic strain, ε=.00050

Max. plastic strain, ε=.0065

Max. total strain, ε=.0070

Required tuning force, F= 434 Lb

XV =1
YV =1
ZV =1
*DIST=9.764
*XF =-3.891
*YF =50.656
*ZF =-5.275
Z-BUFFER

	.121E-16
	843.025
	1686
	2529
	3372
	4215
	5058
	5901
	6744
	7587

psi

Residual Deformation, Von Mises Stress Plot

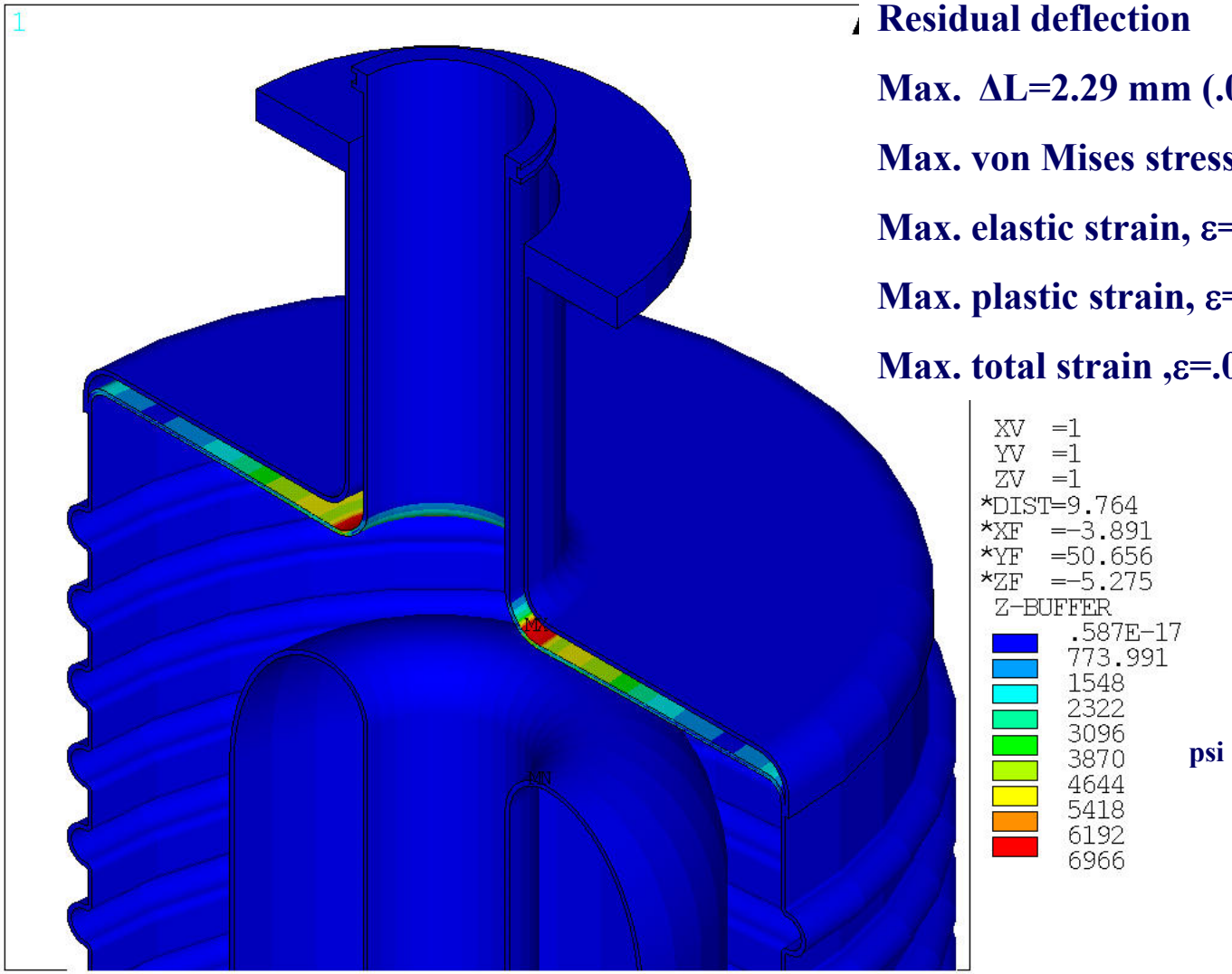

Residual deflection

Max. ΔL=2.29 mm (.09 in)

Max. von Mises stress = 6,966 psi

Max. elastic strain, ε=.00046

Max. plastic strain, ε=.0064

Max. total strain ,ε=.0068

Elastic Deflection With Residual Deformation, Von Mises Stress Plot

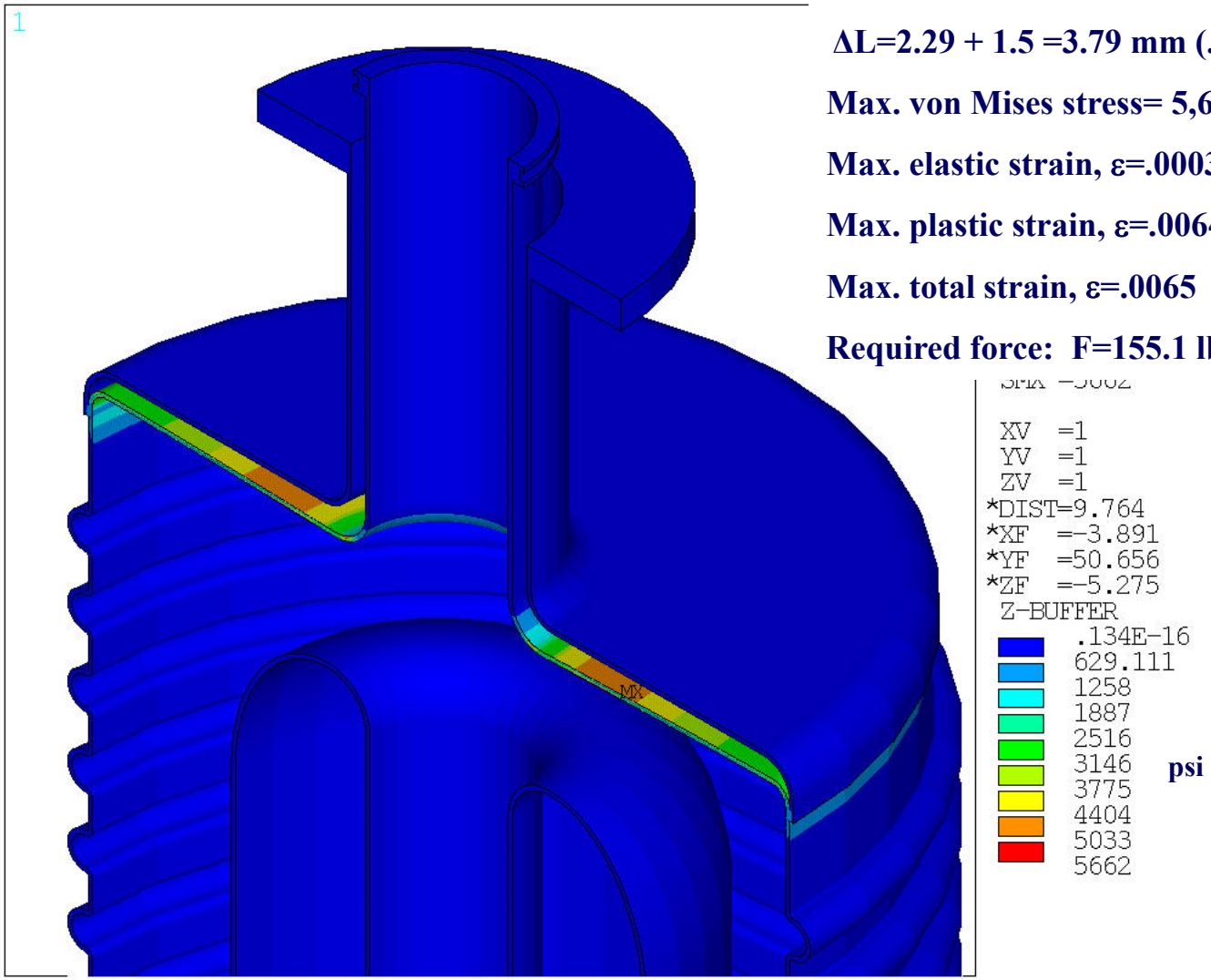

Push down 1.5 mm from residual deformation

ΔL=2.29 + 1.5 =3.79 mm (.149 in)

Max. von Mises stress= 5,662 psi

Max. elastic strain, ε=.00037

Max. plastic strain, ε=.0064

Max. total strain, ε=.0065

Required force: F=155.1 lb

Tuning Sensitivity And Tuning Range

Fundamental Frequency of RF cavity: 56.25 MHz.
RF cavity Tuning Sensitivity: 17 kHz/mm

Tuning Capacity of the tuner plate:
1.Elastic tuning :1.5 mm (25.5 KHz)
Tuning force: 139 lb
Based on yield strength of 7,000 psi at room temperature.
(Yield strength of niobium at cryogenic temperature is more than 2 times higher. Tuning range will be higher too)

2.Plastic tuning: 6.0 mm (102 KHz) with permanent strain of ε=.0064.
Required tuning force: 434 lb.
Note: This plastic tuning is an option only if needed for one time large frequency correction.

Tuner Configurations:

Type: Two stages of simple lever arm tuner. First stage is in the inside of cryostat (cold). Second stage is in the outside of cryostat (warm).

Mechanical leverage: First stage leverage: 3.77

Second Stage leverage: 6.60

Total: 24.88

Tuning Deflection/force in the tuner linkage:

First stage: 1.5 mm/139 lb

Second Stage: 37.32 mm/ 5.58 lb

(Note: If tuning in plastic mode, the force and deflection is 3.2 times)

Tuning Range:

1. Coarse tuner range: 25.5 KHz, installed in the second stage
2. Fast tuner range: 27 Hz, installed in the first stage

2 Step Simple Lever Tuner

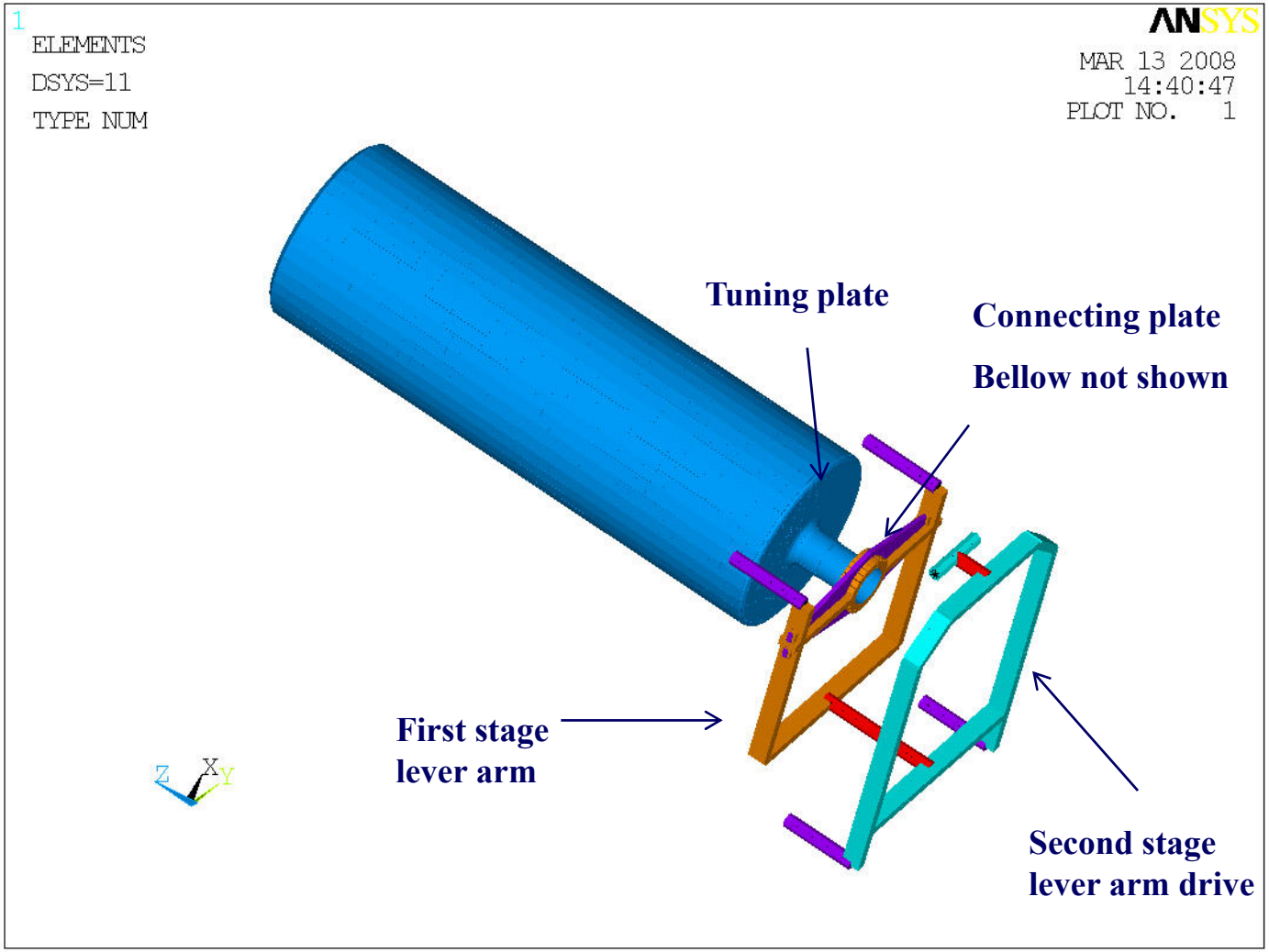

Tuner Driving Mechanism

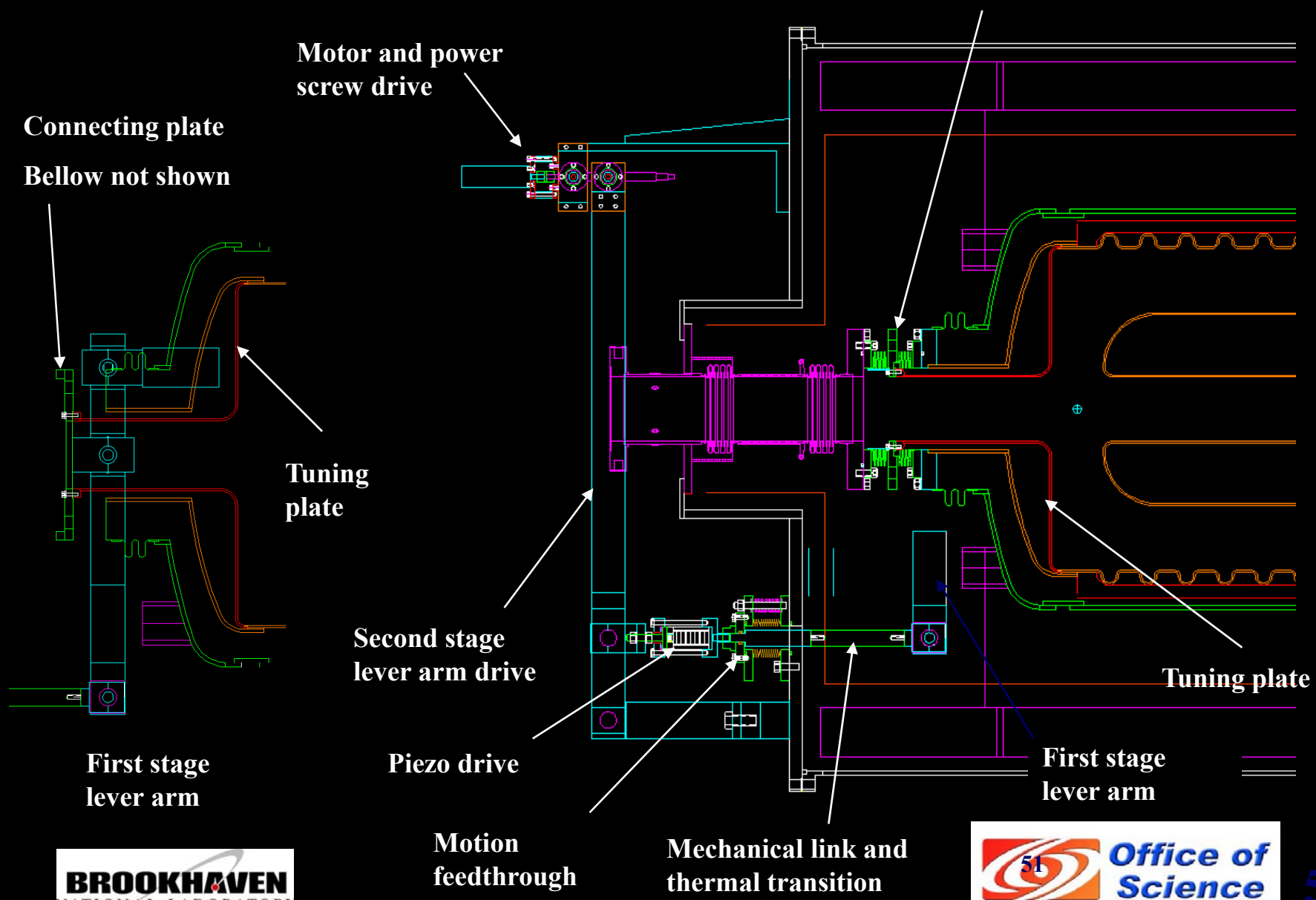

Mechanical Leverage Ratio of Tuner

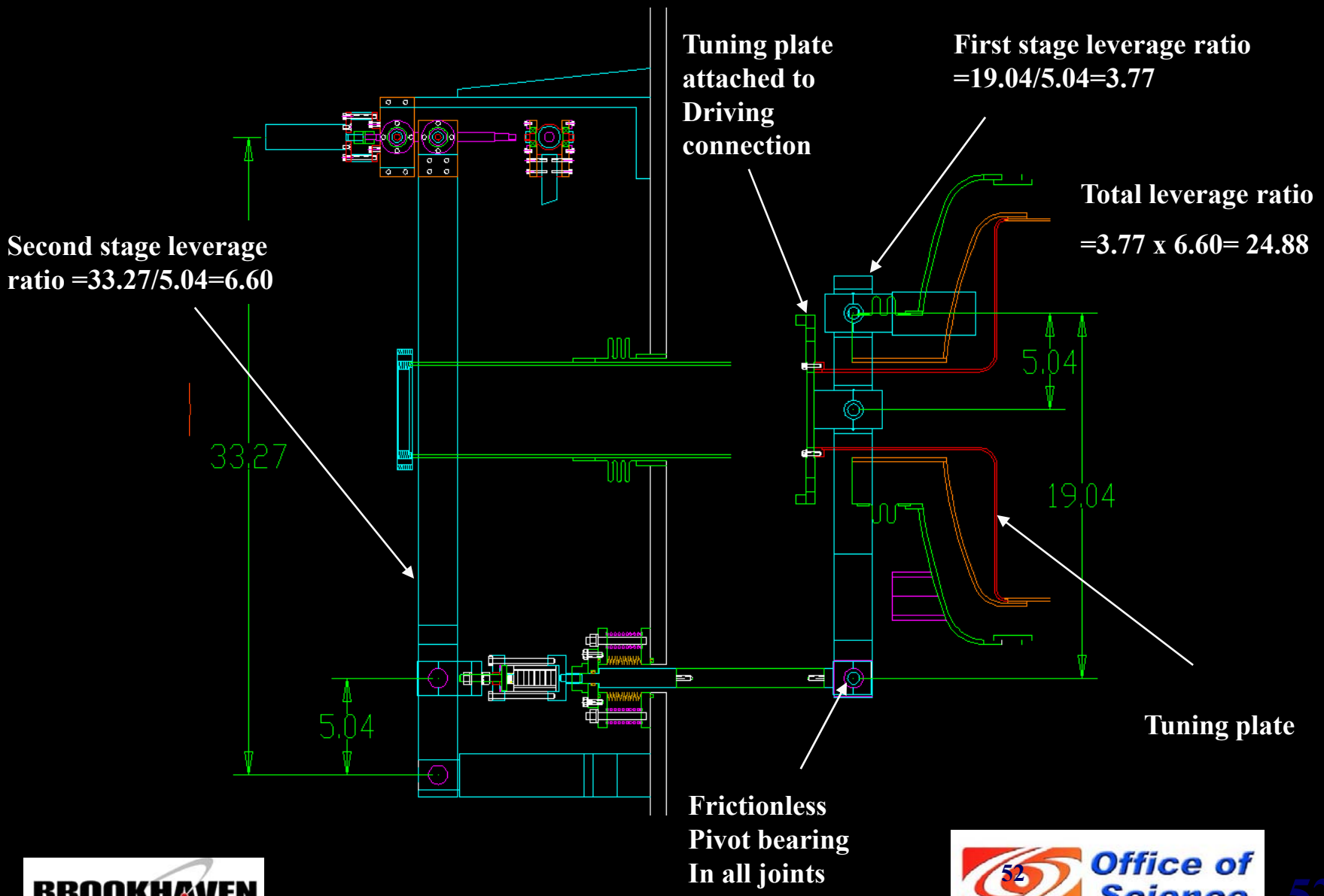

Motion Feedthrough and Thermal Transition link

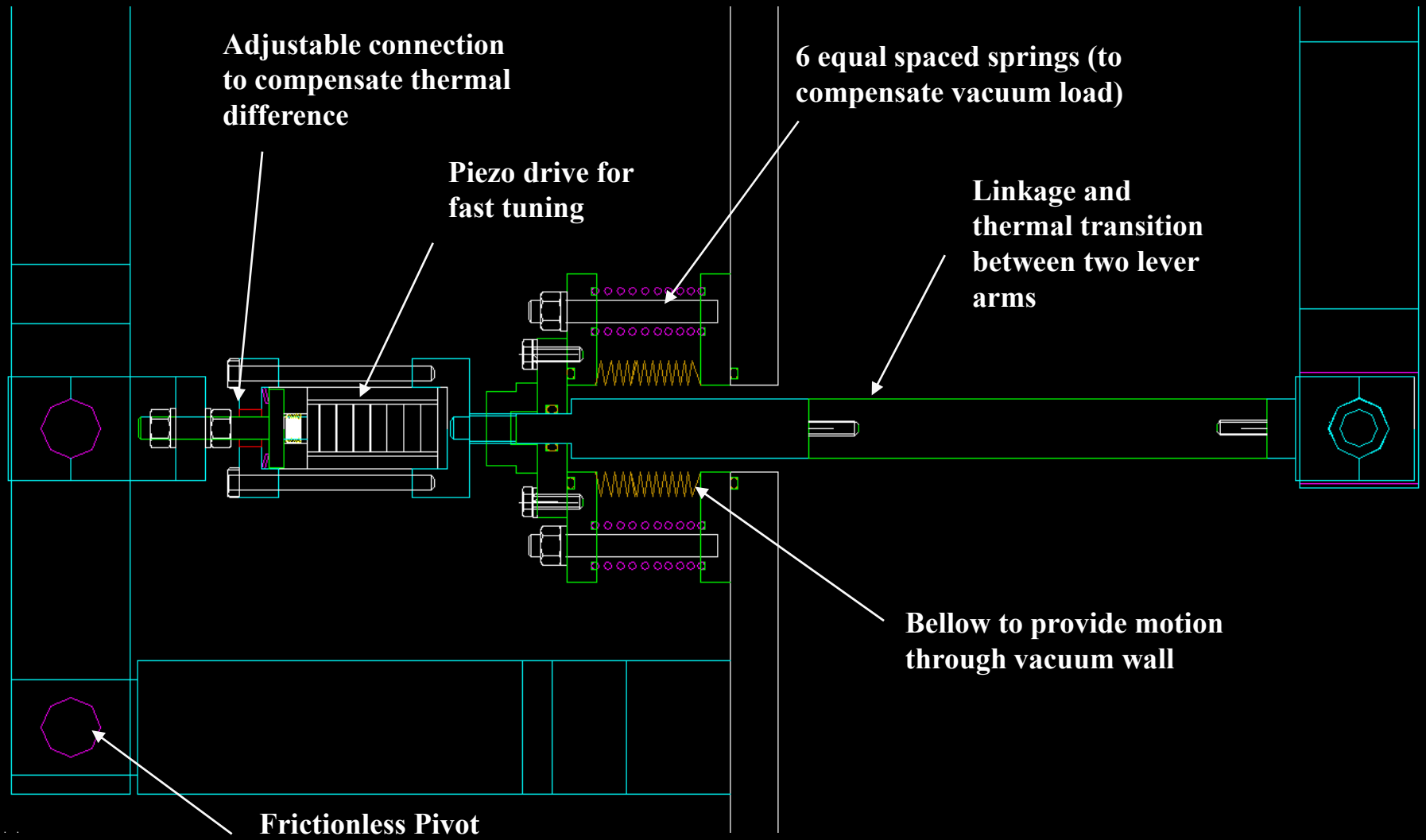

Motor Drive and Power Screw

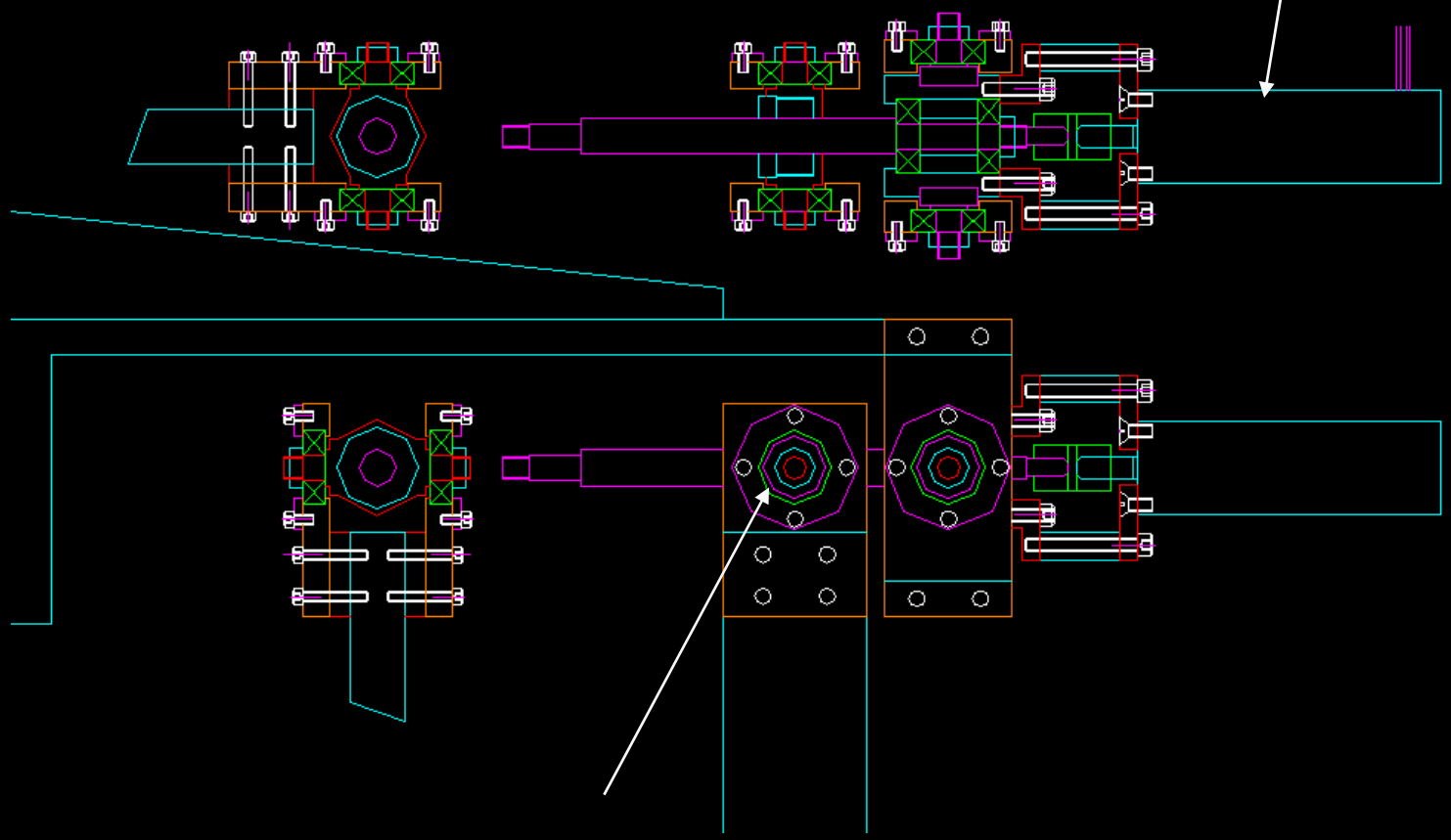

Self Locking ACME power screw/Nut to convert rotation to linear motion

Tuner Drive System

Coarse Tuner

Motor : Integral DC Servo Motor with reducer and Encoder.
Model RH-8D-3006, HD harmonic LLC

Gear Reducer : Harmonic gear reducer,
Reduction ratio: 100:1

Encoder: 1000 step/ rev resolution on motor shaft

Power screw: ACME screw and nut
1/2”-10, .1”/rev pitch

Fast Tuner

Type : High Voltage Piezo Drive

Model: PSt 1000/25/7

maximum stroke: 7 um @ 1000 Volt

Features of The Components Used In The Tuner System

DC servo motor with Harmonic Drive

High encoder resolution, 1000 step/rev

High Gear reduction: 100:1

Zero backlash with harmonic drive

High Torque and High Stiffness

Pivot bearing in every joint:

Frictionless

Stiction-Free

No lubrication required (good cryo and vacuum application)

Maintenance free.

Bellow and adjustable springs in the motion feedthrough

The welded bellow to provide motion stroke

The adjustable springs will compensate vacuum load.

Coarse Tuner Resolution

Power Screw Lead Resolution:

- Encoder resolution: 1000 step/rev
- Gear ratio Harmonic reducer: 100 to 1
- Pitch of ACME power screw: .1” /rev
- Lead: 1.0x10-6 in/step or .025 um/step

RF Cavity Tuning resolution:

- Total Mechanical leverage: 24.88
- RF Deflection per step: 1.00×10^{-3} um
- Tuning sensitivity: 17 Hz/um
- RF cavity tuning resolution: .017 Hz/step

Tuning Speed:

- Motor drive Speed: 0 to 3000 RPM
- Steps per second: 50,000
- Max. Tuning Speed: 850 Hz/sec

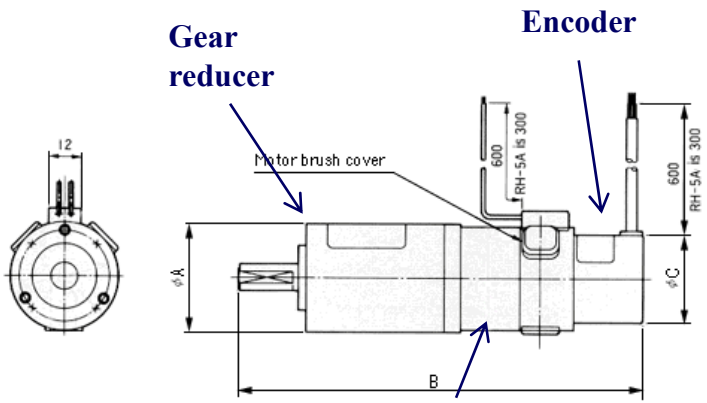

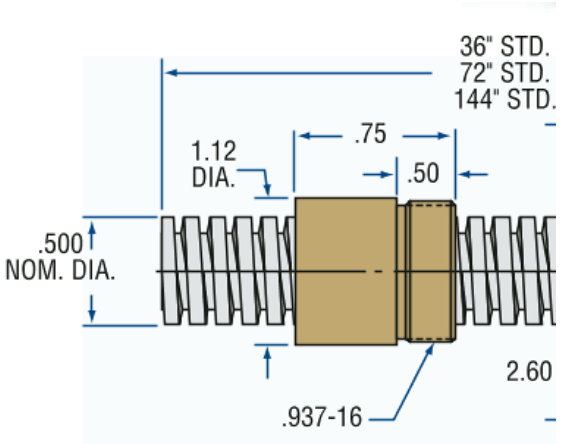

½ in- ACME-10 Screw and Nut set

Fast Tuner Resolution

Type： Piezo Drive

Model: PSt 1000/25/7

Driving Voltage: 0 to 1000 Volt.

Maximum free stroke: 7um.

Stiffness: 1800 N/um

Maximum force generation: 5612 lb

Mechanical leverage in first stage: 3.77

Useful Piezo stroke: 6um (Reduced by preload)

Real Tuning stroke: 1.59 um

Tuning sensitivity: 17 Hz/um

Tuning range: 27 Hz.

Tuning resolution: .027 Hz/Volt (depends on power supply capability)

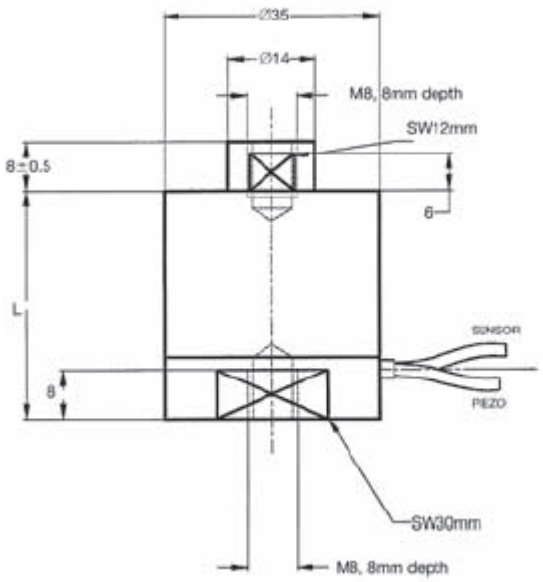

Tuner Motion Study: Simplified Tuner Model

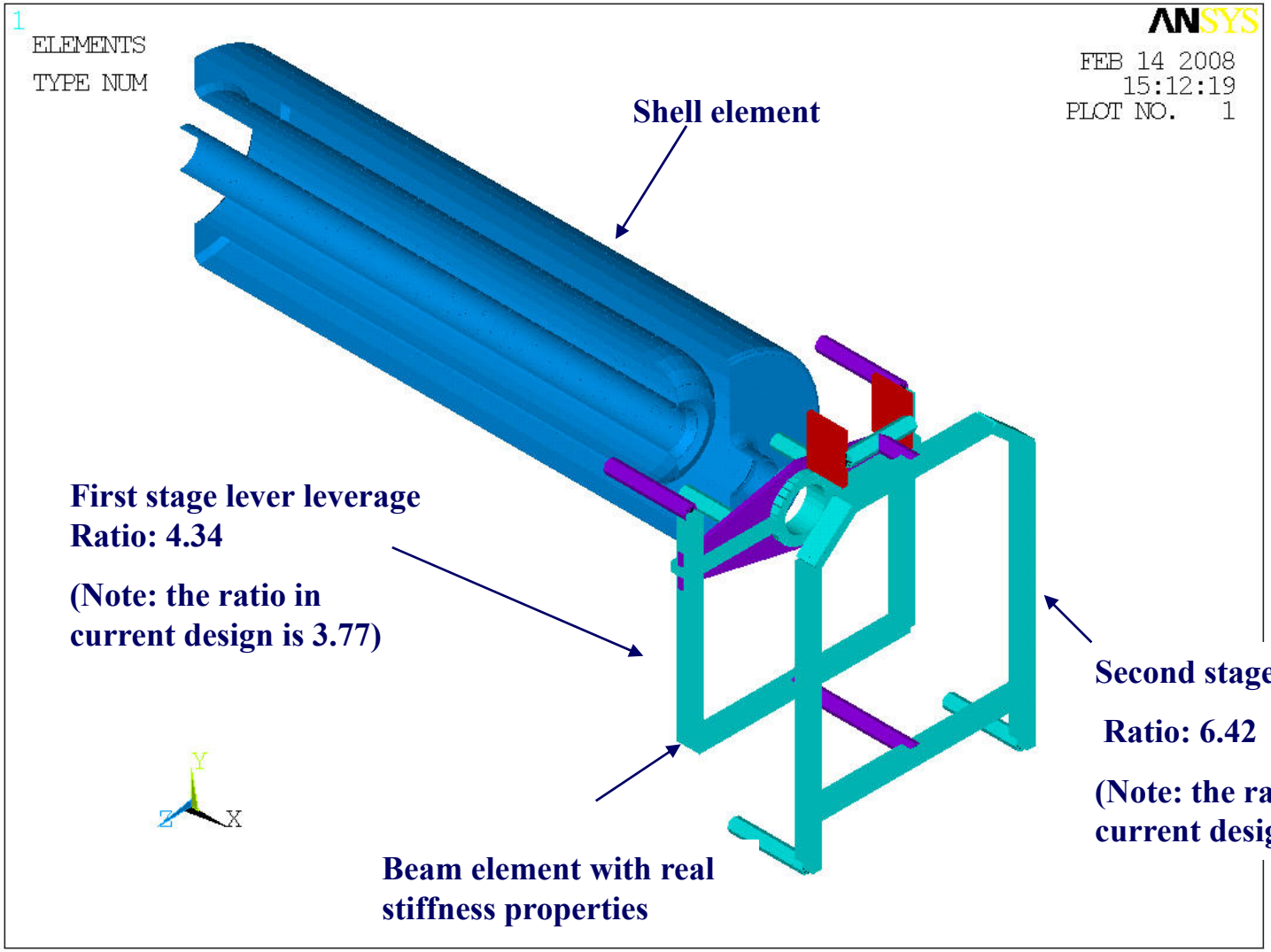

Tuner In Maximum Tuning Position

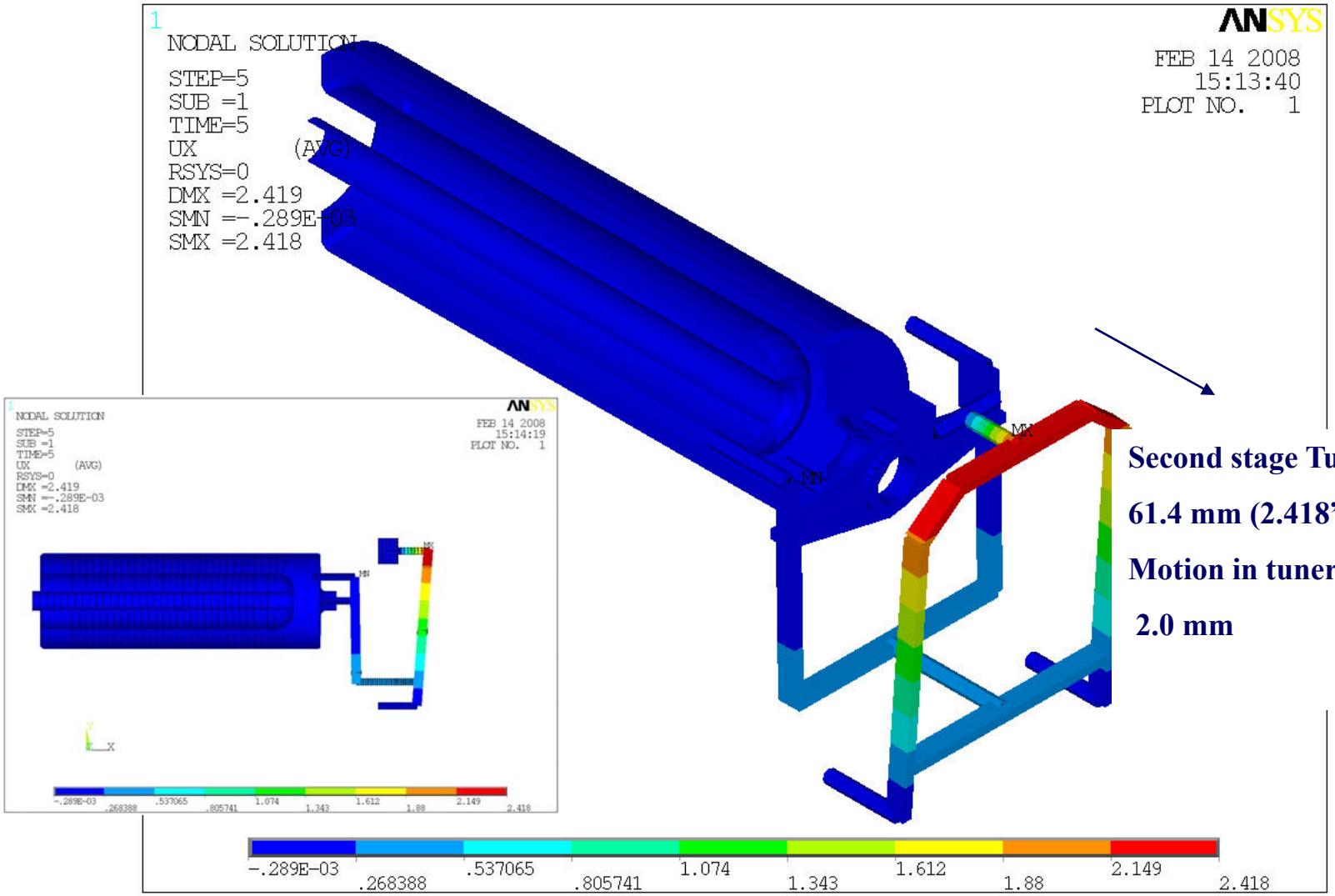

Second stage Tuner motion:

61.4 mm (2.418”)

Motion in tuner plate:

2.0 mm

in

Stiffness of the Tuner Mechanism, K=85,680 lb/in

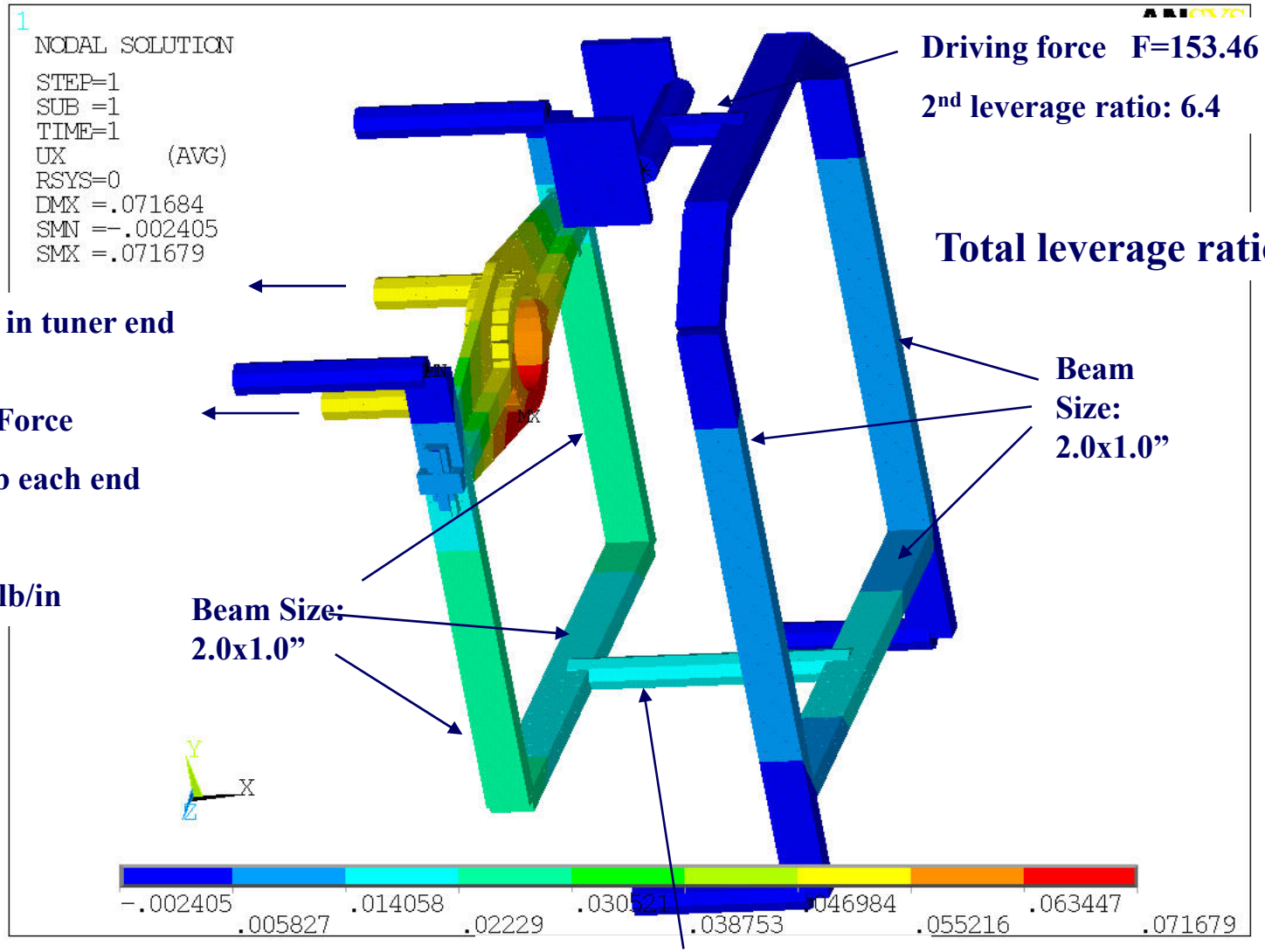

Driving force F=153.46 lb

2nd leverage ratio: 6.4

Total leverage ratio:27.9

Deflection in tuner end D=.05”

Required Force

F = 2142 lb each end

K=85,680 lb/in

Beam Size: 2.0x1.0”

Beam Size: 2.0x1.0”

Linkage Force F=985.67 lb

1st Leverage ratio: 4.3

Natural Vibration Frequency And Mode Shape Of Tuner Mechanism

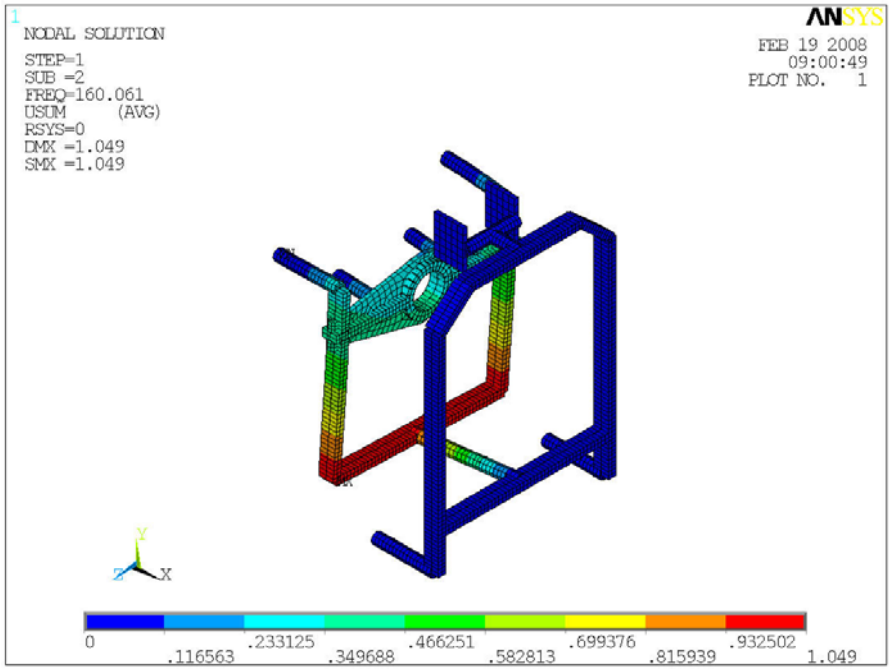

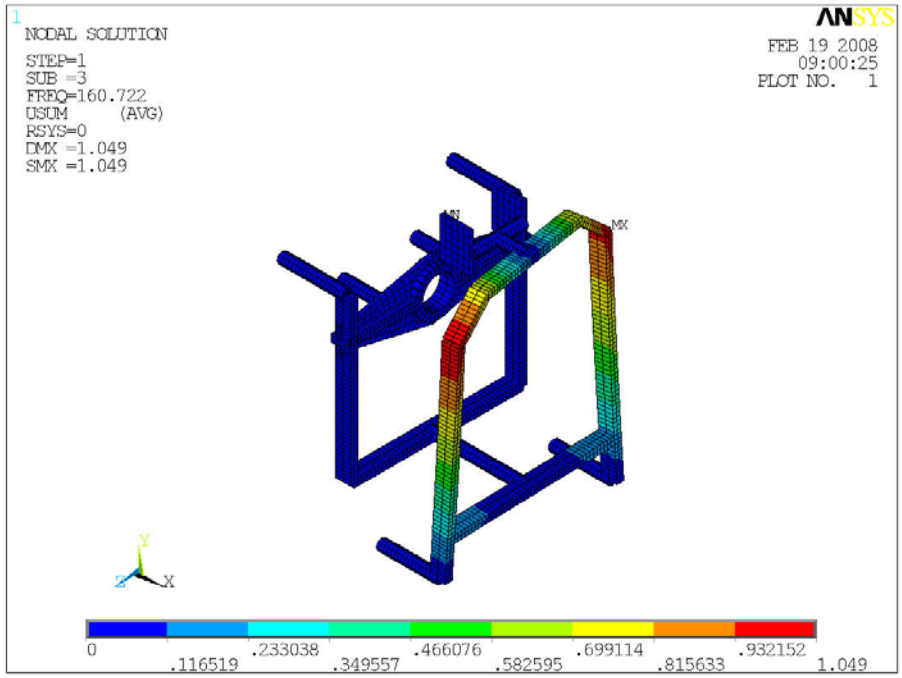

Natural Frequency: 160.0 Hz

Mode shape:

First stage frame swings in Z direction

Natural Frequency: 160.7 Hz

Mode shape:

Second stage frame rocks in Y axis

Tuner Plate Cooling

Cooling Method:
The RF cavity vessel is immersed in 4.5 ^{o} K helium bath for cooling. The tuner plate is an internal structure of the vessel. Its cooling is relied on conduction from both ends.

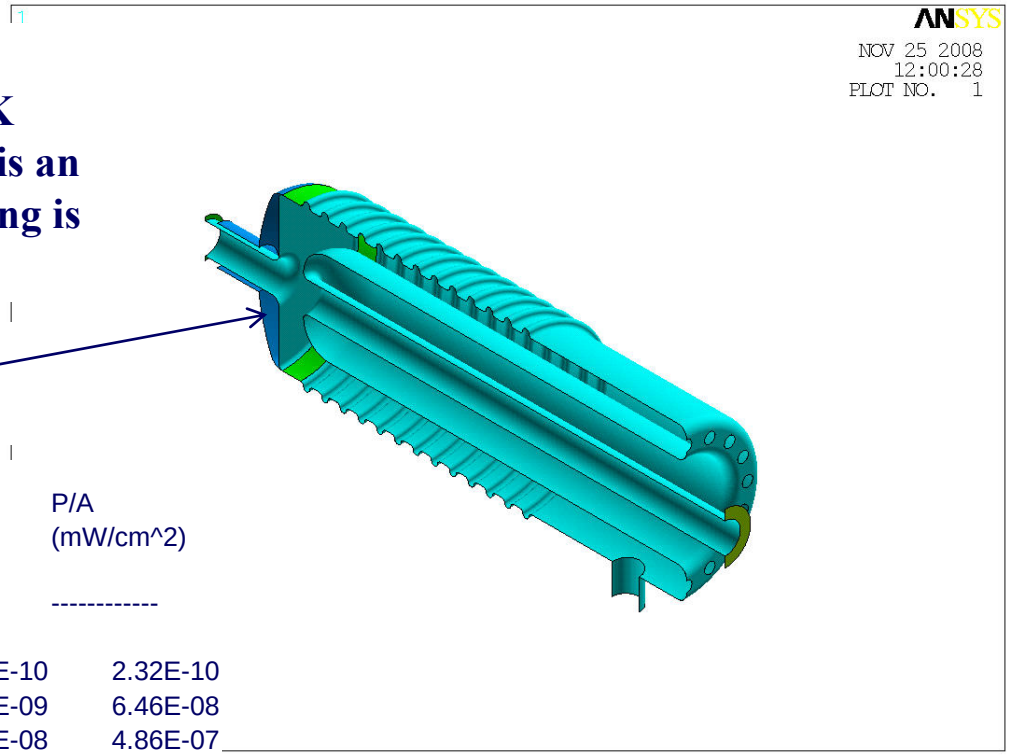

Maximum Heat rate in tuner plate : .00002 W/cm^2

Segment	Zend (cm)	Rend (cm)	Emax (MV/m)	Power (W)	P/A (mW/cm^2)
	-75	5			
3	9.65	5	0.1021	6.16E-10	2.32E-10
4	11.65	5	0.2669	4.06E-09	6.46E-08
5	13.65	5	0.8802	3.06E-08	4.86E-07
6	15.65	5	2.018	2.68E-07	4.27E-06
7	17	5	2.973	8.27E-07	1.95E-05
8	17.65	5	7.166	9.75E-07	4.77E-05
9	19.418	5.7322	24.35	2.02E-05	3.12E-04
10	20.15	7.5	33.14	1.69E-04	2.09E-03
11	20.129	12	30.94	2.07E-03	7.51E-03
12	20.107	14	20.81	1.96E-03	1.20E-02
13	20.086	16	17.29	2.65E-03	1.41E-02
14	20.064	18	13.77	3.27E-03	1.53E-02
15	20.043	20	10.33	3.74E-03	1.57E-02
16	20.021	22	7.083	4.00E-03	1.52E-02

Heat power density in each segment of tuning plate by X. Chang

Temperature Distribution In The Tuner Plate

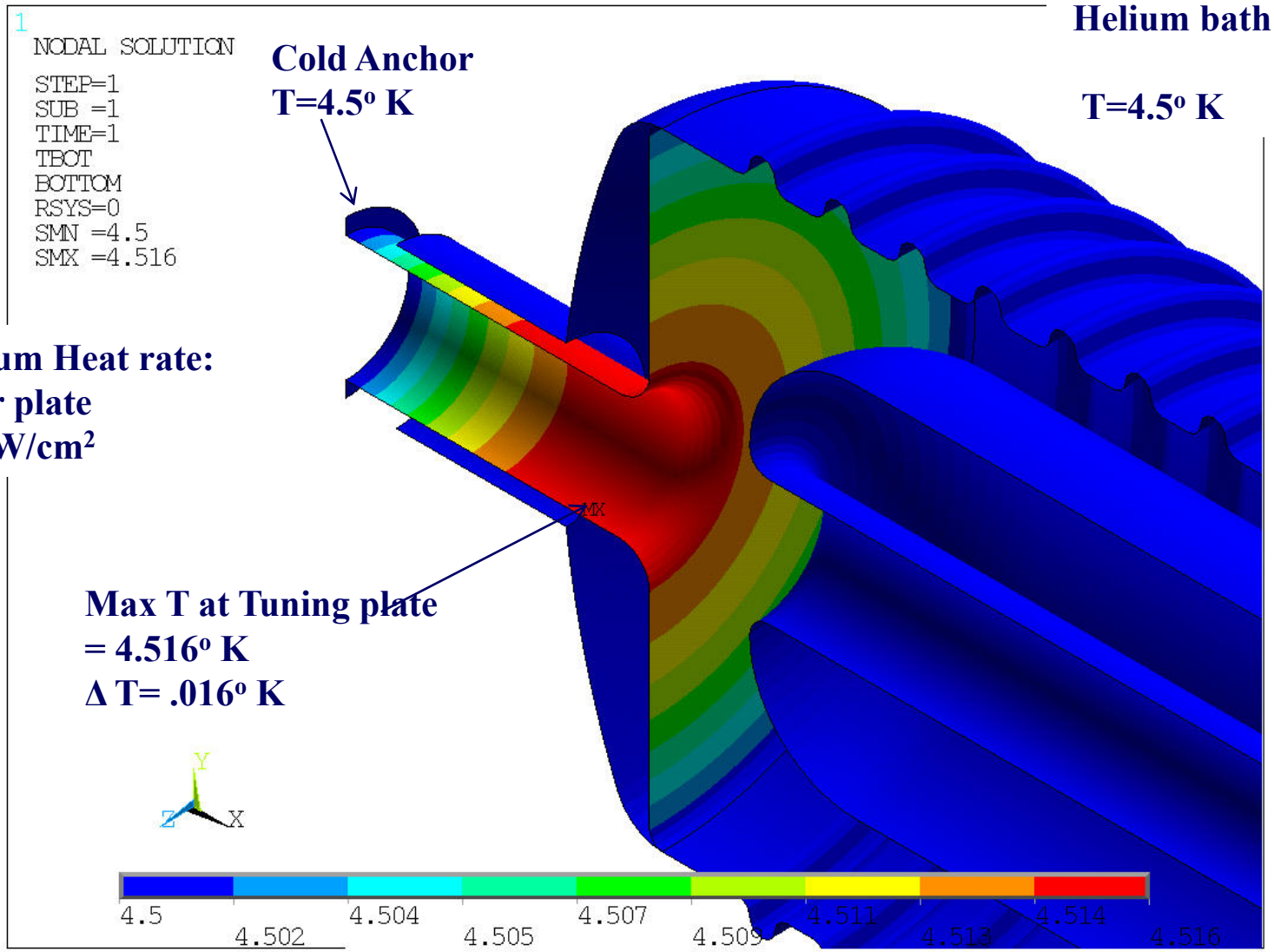

Maximum Heat rate:
at tuner plate
.00002 W/cm²

Max T at Tuning plate
= 4.516° K
Δ T= .016° K

Summary of Tuner Design:

Fundamental SRF Frequency: 56.25 MHz

Tuning Sensitivity: 17 KHz/mm,

Tuner type: 2 step simple lever arm

Total mechanical leverage: 24.88

Tuner plate Deflection range: 1.5 mm

Required Tuning Force: 139 lbf.

Coarse Tuning Range: 25.5 KHz

Fine Tuning Range: 27.0 Hz

Tuning Resolution: .017 Hz/step

Tuner plate Stiffness: K=2,354 lb/in (or 412.8 N/mm)

Tuner Mechanism Stiffness: K=85,680 lb/in (or 15,024 N/mm)