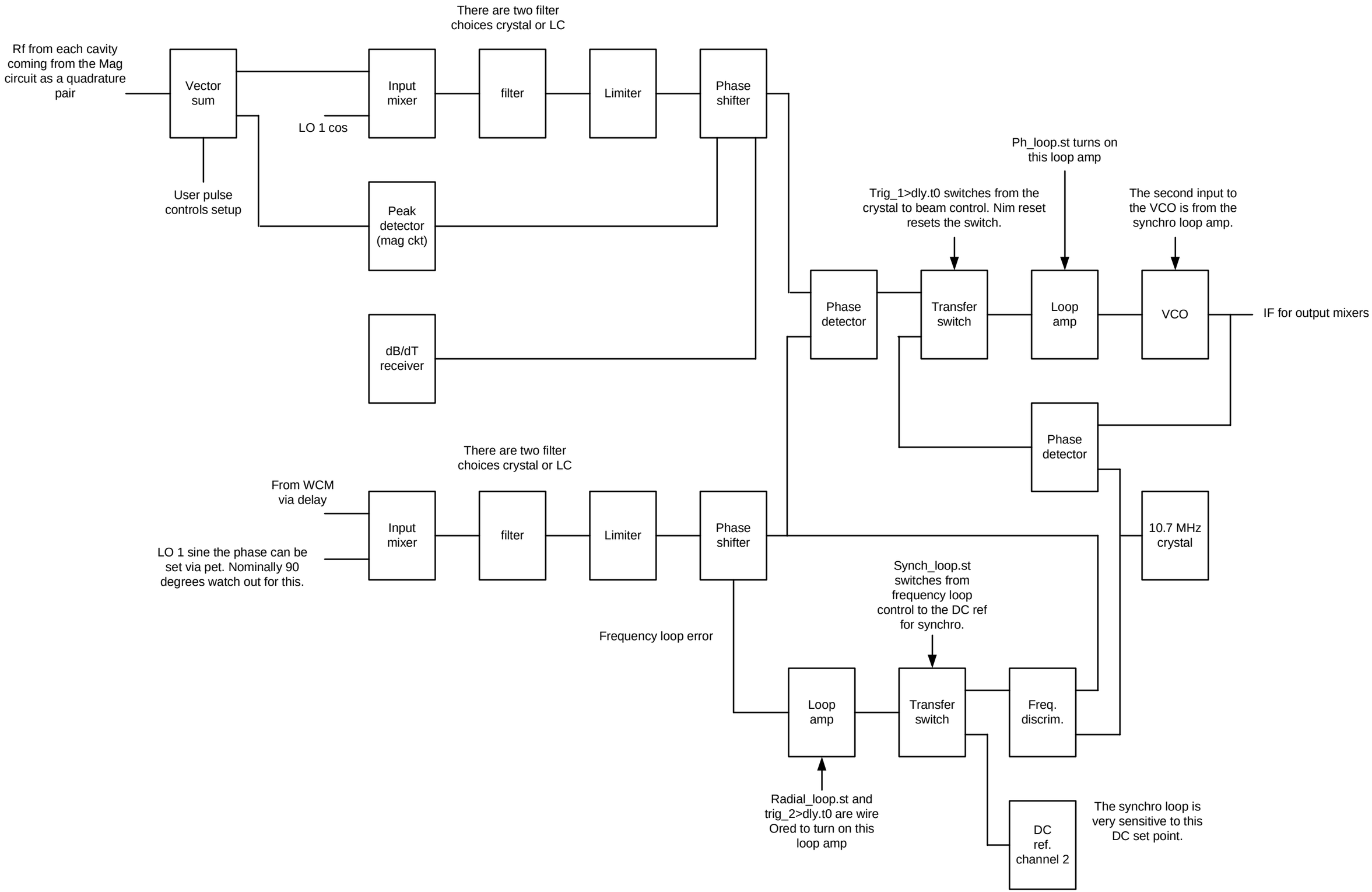
There are two filter choices crystal or LC
Rf from each cavity coming from the Mag circuit as a quadrature pair
Vector sum
Input mixer
filter
Limiter
Phase shifter
LO 1 cos
User pulse controls setup
Peak detector (mag ckt)
dB/dT receiver
Ph_loop.st turns on this loop amp
Trig_1>dly.t0 switches from the crystal to beam control. Nim reset resets the switch.
The second input to the VCO is from the synchro loop amp.
Phase detector
Transfer switch
Loop amp
VCO
IF for output mixers
Phase detector
There are two filter choices crystal or LC
From WCM via delay
Input mixer
filter
Limiter
Phase shifter
10.7 MHz crystal
LO 1 sine the phase can be set via pet. Nominally 90 degrees watch out for this.
Synch_loop.st switches from frequency loop control to the DC ref for synchro.
Frequency loop error
Loop amp
Transfer switch
Freq. discrim.
Radial_loop.st and trig_2>dly.t0 are wire Ored to turn on this loop amp
DC ref. channel 2
The synchro loop is very sensitive to this DC set point.

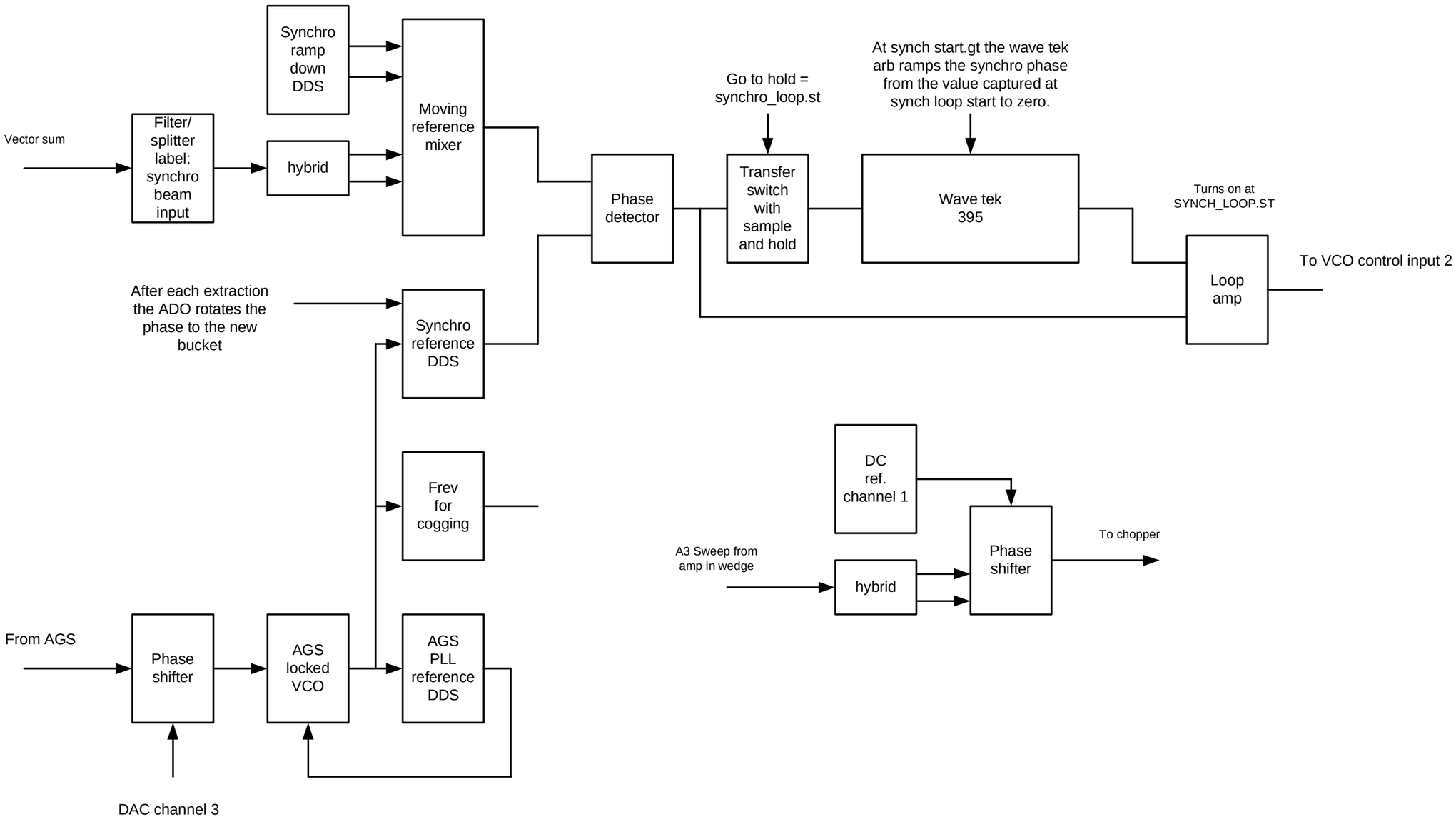
Vector sum
Filter/ splitter label: synchro beam input
Synchro ramp down DDS
hybrid
Moving reference mixer
Phase detector
Go to hold = synchro_loop.st
Transfer switch with sample and hold
At synch start.gt the wave tek arb ramps the synchro phase from the value captured at synch loop start to zero.
Wave tek 395
Turns on at SYNCH_LOOP.ST
Loop amp
To VCO control input 2
After each extraction the ADO rotates the phase to the new bucket
Synchro reference DDS
Frev for cogging
From AGS
Phase shifter
AGS locked VCO
AGS PLL reference DDS
DAC channel 3
DC ref. channel 1
A3 Sweep from amp in wedge
hybrid
Phase shifter
To chopper

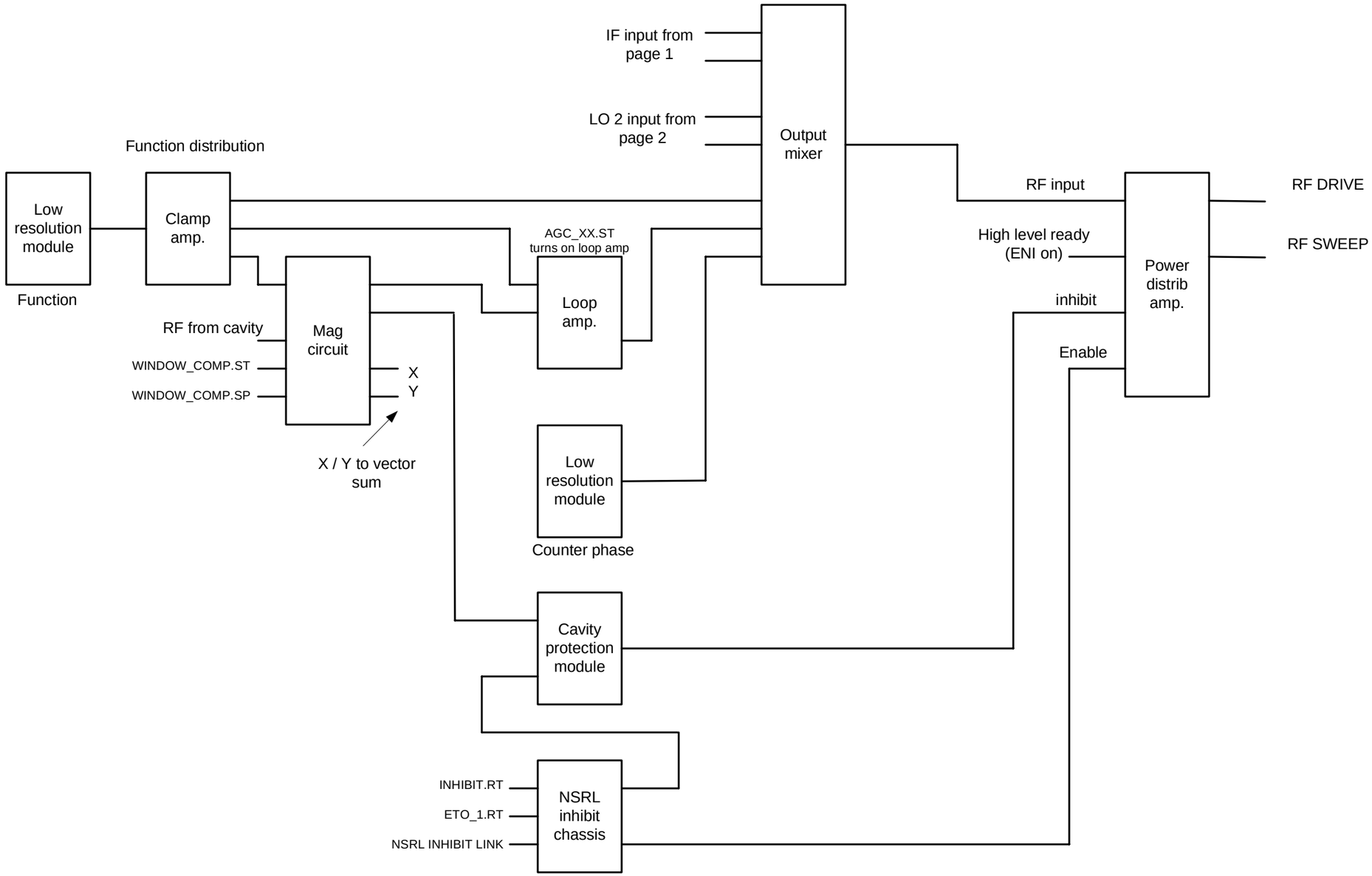
IF input from page 1
LO 2 input from page 2
Output mixer
Function distribution
Low resolution module
Function
Clamp amp.
RF input
RF DRIVE
High level ready (ENI on)
RF SWEEP
AGC_XX.ST turns on loop amp
Loop amp.
Power distrib amp.
inhibit
Enable
RF from cavity
Mag circuit
WINDOW_COMP.ST
WINDOW_COMP.SP
X
Y
X / Y to vector sum
Low resolution module
Counter phase
Cavity protection module
INHIBIT.RT
ETO_1.RT
NSRL INHIBIT LINK
NSRL inhibit chassis